RECEIVED SEP 15 1997

R971253

PARTS CATALOG TITLE MODEL 180 & 185 SERIES (THRU 1973)

PARTS CATALOG NUMBER P527-12 DATED 15 JUNE 1974

TEMPORARY REVISION NO. 1

DATED: 20 FEBRUARY 1978

This revision consists of the following pages, which replace existing pages in printed catalog:

page 25D

File this page following "List of Effective Pages" in the front of your catalog as a record of pages affected by this temporary revision.

FIGURE AND INDEX NO.	PART NUMBER	DESCRIPTION 1 2 3 4 5 6 7	UNITS PER ASSY	USABLE ON CODE
8A-	0722180-29	LEADING EDGE ASSY-WING INBOARD LH STANDARD RANGE	1	A
	0722180-30	LEADING EDGE ASSY-WING INBOARD RH STANDARD RANGE	1	A
	0722180-31	LEADING EDGE ASSY-WING INBOARD LH EXTENDED RANGE	1	A
	0722180-32	LEADING EDGE ASSY-WING INBOARD RH EXTENDED RANGE	1	A
- 1	0722180-37	SKIN-LEADING EDGE INBOARD LH STANDARD RANGE	1	
	0722180-39	SKIN-LEADING EDGE INBOARD LH EXTENDED RANGE	1	
- 2	0722180-38	SKIN-LEADING EDGE INBOARD RH STANDARD RANGE	1	
	0722180-40	SKIN-LEADING EDGE INBOARD RH EXTENDED RANGE	1	
- 3	0722183-1	RIB ASSEMBLY-NOSE LH STA 24.375	1	
	0722183-2	RIB ASSEMBLY-NOSE RH STA 24.375	1	
- 4	S1863-3	NUTPLATE	2	
- 5	0422291	BRACKET-PITOT LH ONLY	1	
- 6	S1291-8	GROMMET	8	
- 7	S1860-2A	NUTPLATE UPPER	1	
	A6204-AZ3	NUTPLATE LOWER	1	
- 8	0722203-1	SCOOP-CABIN AIR VENT	1	
- 9	0450314-1	FITTING ASSEMBLY-CABIN AIR VENT	1	
		ATTACHING PARTS		
	S1021ZR-8	SCREW	1	
	NAS446-4-3	NUT	1	
		---*---		
-10	1200637-5	SCOOP ASSEMBLY-AIR	1	
	0700692-1	CAP-AIR INLET	1	
		ATTACHING PARTS		
	NAS397-22	CLAMP	1	
	AN960-4	WASHER	4	
		---*---		
-11	0722184-2	RIB-NOSE STA 32.75	1	
-12	0722185-5	RIB ASSEMBLY-NOSE LH STA 40.125	1	
-13	0422292	BRACKET	1	
-14	0722185-1	RIB-NOSE RH STA 40.125	1	
-15	0722185-2	RIB-NOSE STA 49.00 & STA 57.37	2	
-16	0722185-6	RIB ASSEMBLY-NOSE LH STA 64.25	1	
-17	0422292	BRACKET	1	
-18	0722185-2	RIB-NOSE RH STA 64.25	1	
-19	0722186-1	RIB-NOSE STA 72.352	1	
-20	0722186-3	RIB ASSEMBLY-NOSE LH STA 85.375	1	
-21	0422292	BRACKET	1	
-22	0722186-1	RIB-NOSE RH STA 85.375	1	
-23	S226-2	DOUBLER ASSEMBLY-ACCESS	4	
	NAS444-14-3	NUT	3	
-24	0721114-3	DOUBLER-PITOT REINFORCEMENT LH ONLY	1	
-25	0721115-1	CONNECTOR ASSEMBLY-PITOT TUBE LH ONLY	1	
	0722180-7	LEADING EDGE ASSY-WING OUTBOARD LH WEU 0722180-51	1	B
	0722180-51	LEADING EDGE ASSY-WING OUTBOARD LH	1	C
	0722180-8	LEADING EDGE ASSY-WING OUTBOARD RH WEU 0722180-52	1	B
	0722180-52	LEADING EDGE ASSY-WING OUTBOARD RH	1	C
-26	0722180-23	SKIN-LEADING EDGE LH WEU 0722180-49	1	B
	0722180-49	SKIN-LEADING EDGE LH	1	C
-27	0722180-24	SKIN-LEADING EDGE RH WEU 0722180-50	1	B
	0722180-50	SKIN-LEADING EDGE RH	1	C
-28	S226-2	DOUBLER ASSEMBLY-ACCESS	2	
	NAS444-14-3	NUT	3	
-29	0722188-1	RIB-NOSE LH STA 118.00	1	
-30	0722188-2	RIB-NOSE RH STA 118.00	1	
-31	0722189-1	RIB-NOSE LH STA 136.00	1	
-32	0722189-2	RIB-NOSE RH STA 136.00	1	
-33	0722190-1	RIB-NOSE LH STA 154.00	1	
-34	0722190-2	RIB-NOSE RH STA 154.00	1	
-35	0722191-1	RIB-NOSE LH STA 172.00	1	
-36	0722191-2	RIB-NOSE RH STA 172.00	1	
-37	0722192-1	RIB-NOSE LH STA 190.00	1	
-38	0722192-2	RIB-NOSE RH STA 190.00	1	
-39	0722193-1	RIB ASSEMBLY-NOSE LH STA 208.00	1	
-40	0722193-2	RIB ASSEMBLY-NOSE RH STA 208.00	1	
	NAS696A08	NUTPLATE	2	
-41	S1291-8	GROMMET	6	
		A---SERIAL 18502091 THRU 18502310		
		SERIAL 18052285 THRU 18052384		
		B---SERIAL 18502091 THRU 18502271		
		SERIAL 18052285 THRU 18052373		
		C---SERIAL 18502272 THRU 18502310		
		SERIAL 18052374 THRU 18052384		

Wing (Cont)

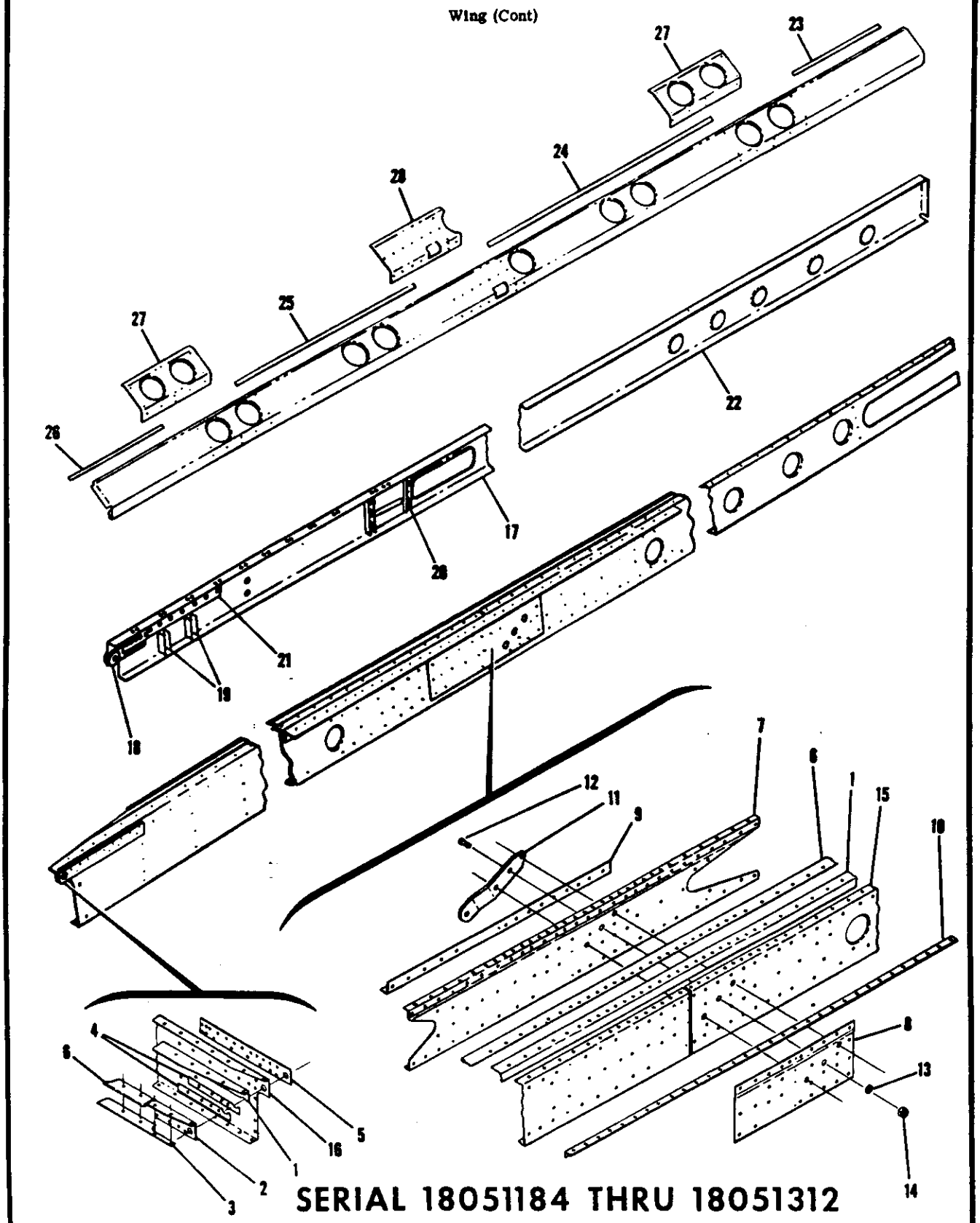

SERIAL 18051184 THRU 18051312

Figure 9. Wing Spars Assemblies

TEMPORARY REVISION NUMBER 2

DATED 1 MARCH 1995

MANUAL TITLE MODEL 180 & 185 SERIES PARTS CATALOG (1961 THRU 1973)

MANUAL NUMBER - PAPER COPY P527-12 **AEROFICHE** P527-12AF

TEMPORARY REVISION NUMBER - PAPER COPY P527TR2-12 **AEROFICHE** NA

MANUAL DATE 15 JUNE 1974 **REVISION NUMBER** NA **DATE** NA

This Temporary Revision consists of changes to the subject Parts Catalog and replaces all previously issued Revision Sheets. Pen and ink changes should be made to the paper copy of the manual and supersede the aerofiche information.

NOTE

The "R" located in the first column, of the revision sheet(s), indicates changes that have occurred since the issuance of the previous Revision Sheets and/or Temporary Revision text pages.

PAGE	FICHE/FRAME
1	None
2	None
3	None

REASON FOR TEMPORARY REVISION

To incorporate later parts information changes to the Parts Catalog.

FILING INSTRUCTIONS FOR THIS TEMPORARY REVISION

For paper publications:
After making pen and ink changes to the Parts Catalog Pages as noted on the attached revision sheet(s) and/or Temporary Revision Text pages; file this cover sheet and the revision sheets behind the publications title page to identify the inclusion of the Temporary Revision into the manual.

For aerofiche publications:
Draw a line through any aerofiche frame (page) affected by the Temporary Revision with a permanent red ink marker. This will be a visual identifier that information in the frame (page) is no longer valid and the Temporary Revision should be referenced. Temporary Revisions should be collected and maintained in a notebook near the aerofiche library for quick reference.

COPYRIGHT © 1995
CESSNA AIRCRAFT COMPANY
WICHITA, KANSAS, USA

CESSNA AIRCRAFT COMPANY

MODEL 180 & 185 SERIES (1961 THRU 1973)

PARTS CATALOG REVISION SHEET

	Page No.	Fig. No.	Index No.	CHANGE FROM	CHANGE TO	REMARKS
R	7D	2B	18	0716113-2	0716113-4	
R	7D	2B	28	0705019-3	No Change	In Desc, Delete "& Selector"
R	7D	2B	28	075019-4	Delete Line	No Longer Used
R	7F	2B	-	- - - - - - - -	- - - - - - - -	Refer to Notes, Page 3
R	13	4	16	0523510-6	No Change	Refer to Notes, Page 3
	25D	8A	2	0722180-30	0722180-38	
R	39	14	19	0760111-2	0760011-2	
R	50	19	66	0332136-6	S1938-3-68.00	
R	71	28	-	0791303-4	No Change	In Desc, Add "185"
R	71	28	-	0791303-5	No Change	In Desc, Add "185"
R	71	28	-	0791303-7	No Change	Refer to Notes, Page 3
R	71	28	-	0791309-9	0791303-9	Refer to Notes, Page 3
R	71	28	-	0791303-3	No Change	In Desc, Add "180"
R	71	28	-	0791303-6	No Change	In Desc, Add "180"
R	71	28	-	0791303-8	No Change	Refer to Notes, Page 3
R	71	28	-	0791309-10	0791303-10	Refer to Notes, Page 3
R	81B	32A	28	0711698-5	S2382-1	
R	83	33	14	0753000-28	0753000-29	
R	83	33	14	0753000-29	0753000-28	
R	88C	35A	26	0712013-51	0712013-52	
R	108	44	47	Not Listed	9510971	Desc: Cylinder Head; Qty (1)
R	115	47	49	MS35692-522	AN310-5	
R	117	48	20	0742401	5940-901	
R	121	50	12	MS20392-2C9	0711039-2	
R	131	54	1	1414082-20	0514078-5	When Exhausted Use
R	137	57	12	0711133-32	Delete Line	No Longer Used
R	137	57	12	0711133-41	Delete Line	No Longer Used
R	137	57	12	0413484-5	No Change	Change Code **V** to **L**
R	137	57	12	0711133-6	0711133-83	
R	157D	64A	-	- - - - - - - -	- - - - - - - -	Refer to Notes, Page 3
R	171B	68A	25	S2077-5	1670056-2	
R	171Q	68C	65	Not Listed (Indent 3)	NAS1593-012	Desc, O Ring Qty (2)
R	171K	68B	62	Not Listed (Indent 3)	NAS1593-012	Desc, O Ring Qty (2)
R	173	69	8	0713514-13-279	0713514-200-279	
R	177	70	14	Not Listed	0700122-13 #	Visor-Sun LH Qty (1) Code **R**
R	177	70	14	Not Listed	0700122-12 #	Visor-Sun RH Qty (1) Code **R**
R	177A	70	14	- - - - - - - -	- - - - - - - -	Refer To Notes, Page 3
R	177A	70	45	D4023X.375	D4023X3/8	
R	187A	74	99B	0750341-1	0750234-1	
R	197	78	10	MS1652-16	MS16562-16	
R	197B	78A	11	NAS561P6-12	MS16562-16	

Please update your parts catalog as shown above.

CESSNA AIRCRAFT COMPANY

MODEL 180 & 185 SERIES (1961 THRU 1973)

PARTS CATALOG REVISION SHEET

	Page No.	Fig. No.	Index No.	CHANGE FROM	CHANGE TO	REMARKS
R	219	89	10	NAS397-50-1	S1891-48	
R	223	91	32	0411564	0411564-3	
R	223	91	33	0411564-3	0411564	
R	225	92	18	0411302-203	0411306-203	
R	233	96	51	Not Listed (Indent 2)	S338-6	Desc: Fairlead Half Qty (2)
R	233	96	51	Not Listed (Indent 2)	S339-2	Desc: Clip-Fairlead Qty (1)
R	236	97	56	MS16624-43	MS16624-1043	
R	255	104	30D	0850375-1	S2218-2	
R	259	105	28D	0850375-1	S2218-2	
R	259B	105	65	0716632-2	0716632-1	
R	262	106	45	Not Listed (Indent 3)	NAS1593-012	Desc: O Ring Qty (2)
R	271	110	2	0750032-1	S2384-1	
R	271	110	16	MS20822-2D	MS20822-8D	
R	275A	113	41	MS28773-4	MS28778-4	
R	287B	118A	2	Not Listed (Indent 3)	NAS1593-012	Desc: O Ring Qty (2)
R	291B	120A	16A	Z651-1	Delete line	
R	291B	120A	16B	Z651-3	Delete line	
R	291B	120A	16C	Z651-13	Delete line	
R	291B	120A	16D	C166006-0108	No Change	Change Index No. to read 16A
R	291D	120B	3	Z651-13	Delete line	
R	291D	120B	5	Z651-1	Delete line	
R	291D	120B	6	Z651-3	Delete line	
R	291H	120C	3	Z651-13	Delete line	
R	291H	120C	4	C166006-0108	No Change	Add: Code **B**
R	291H	120C	5	Z651-1	Delete line	
R	291H	120C	6	Z651-3	Delete line	
R	301B	123A	4	0713029	No Change	Refer To Notes, Page 3
R	301B	123A	4A	Not Listed (Indent 3)	S1831-1	Refer To Notes, Page 3
R	301B	123A	5	S1021Z4-6	No Change	Refer To Notes, Page 3
R	301B	123A	5	Not Listed (Indent 3)	AN515-4R4	Refer To Notes, Page 3
R	301B	123A	7	NAS446-1-3	No Change	Refer To Notes, Page 3
R	307	126	6	0711086-1	No Change	Change: Code **T** to **AC**
R	307	126	20	0711088-1	No Change	Change: Code **T** to **AC**
R	307	126	20	0711088-2	No Change	Change: Code **T** to **AC**
R	307	126	22	0711086-2	No Change	Change: Code **T** to **AC**
R	308	126	52	0512107-39	No Change	Change: Code **T** to **AC**
R	309	126	-	- - - - - - - -	- - - - - - - -	Refer To Notes, Page 3
R	308	126	48	0710010-15	No Change	Change: Code **T** to **AC**
R	317	129	29	0700069-1	0700070-1	

Please update your parts catalog as shown above.

NOTES

PG	FIGURE	INDEX NO.	
7F	2B	-	**Delete:** Serialization Series **S** at the end of Figure 2B.
13	4	16	**(P/N 0523510-6) Description:** Change "Rib Assembly-Wing Fuel Bay LH" to read, "Rib Assembly-Center RH STA 100".
71	28	-	**(P/N 0791303-7)** In Description, add "185"; also, change Code **W** to **X.**
71	28	-	**(P/N 0791303-9)** In Description, add "185"; also, change Code **AA** to **AB.**
71	28	-	**(No P/N)** (Note: 1st **NP** entry) Structure Assembly - Fuselage Front Section (NP): Change Code **AD** to **AE.**
71	28	-	**(P/N 0791303-8)** In Description, add "180". Change Code **X** to **W.**
71	28	-	**(P/N 0791303-10)** In Description, add "180". Change Code **AB** to **AA.**
71	28	-	**(No P/N)** (Note: 2nd **NP** entry) Structure Assembly - Fuselage Front Section **Insert:** "180" (NP): Change Code **AE** to **AD.**
157D	64A	-	**Change serialization at the end of Figure 64A:** **Was :** C- - -Serial 18501600 Thru 18507870 **Change to:** C- - -Serial 18501600 Thru 18501870
177A	70	-	**Change serialization at the end of Figure 70:** **Was :** B- - - Serial 185-0513 Thru 18502310 Serial 18051184 Thru 18052384 **Change to:** B- - - Serial 185-0513 Thru 185-0776 Serial 18051184 Thru 18051445 **Add:** R- - - Serial 185-0777 Thru 18502310 Serial 18051446 Thru 18052384
301B	123A	4	**(P/N 0713029) Change:** Units Per Asy from (1) to **NP**
301B	123A	4A	**(S1831-1) Description:** Switch-Map Light Qty (1) Code **D**
301B	123A	5	**(S1021Z4-6) Add to Description:** Used with 0713029 Switch
301B	123A	5	**(P/N AN515-4R4) Description:** "Screw Used With S1831-1 Switch Qty (1) Code **D**
301B	123A	7	**(NAS446-1-3) Add to Description:** Used with 0713029 Switch
308A	126	-	**Change Serialization at the end of Figure 126:** **Add:** AC- - - Serial 185-0001 Thru 18501832 Serial 18051313 Thru 18052175

Please update your parts catalog as shown above.

Cessna

Cessna Aircraft Company
Wichita, Kansas

SERIAL APPLICABILITY FOR MODELS COVERED
IN THIS CATALOG ARE SHOWN AS FOLLOWS:

18051184 THRU 18051993 FOR THE MODEL 180

18051994 THRU 18052384 FOR THE MODEL SKYWAGON 180

185-0001 THRU 185-1447 FOR THE MODEL 185 SKYWAGON
(260 HP ENGINE 185 AND 300 HP ENGINE A185)

185-1448 THRU 18502310 FOR THE MODEL SKYWAGON 185
(300 HP ENGINE A185)

18501935 THRU 18502310 FOR THE MODEL AG CARRYALL

ALL INFORMATION APPLICABLE TO SERIALS 185-0968
AND HIGHER IS APPLICABLE TO AIRCRAFT WITH
EITHER ENGINE UNLESS SPECIFICALLY NOTED.

THIS CATALOG SUPERSEDES ALL 1963 THRU 1973 180F, G, H & J
& ALL 1961 THRU 1973 185 SERIES PARTS CATALOGS

15 JUNE 1974

P527-12-RGI-100-3/97

INSERT LATEST CHANGED PAGES. DESTROY SUPERSEDED PAGES.

LIST OF EFFECTIVE PAGES

Dates of issue for original and changed pages are:

Original . . . 0 . . . 15 June 1974

TOTAL NUMBER OF PAGES IN THIS PUBLICATION IS 748 CONSISTING OF THE FOLLOWING:

Page No.	Change No.	Page No.	Change No.	Page No.	Change No.
Title	0	33B blank	0	98 thru 100	0
A	0	33C	0	101 blank	0
B	0	33D	0	102	0
C blank	0	34 thru 36	0	103	0
i thru vi	0	36A blank	0	103A thru 103C	0
vii blank	0	36B	0	103D blank	0
viii thru x	0	37 thru 47	0	103E thru 103H	0
x-a thru x-e	0	47A	0	104 thru 108	0
x-f blank	0	47B blank	0	109 blank	0
xi thru xlviii	0	48 thru 57	0	110 thru 113	0
1 thru 3	0	57A	0	113A thru 113C	0
3A thru 3C	0	57B blank	0	113D blank	0
3D blank	0	58 thru 62	0	113E thru 113H	0
4	0	62A	0	114 thru 117	0
4A	0	62B	0	117A thru 117E	0
4B	0	63 thru 68	0	117F blank	0
5	0	69 blank	0	118 thru 125	0
6	0	70	0	125A	0
6A	0	71	0	125B	0
6B	0	71A	0	126 thru 133	0
7	0	71B	0	133A	0
7A thru 7H	0	72 thru 78	0	133B blank	0
7J	0	79 blank	0	134 thru 138	0
7K	0	80	0	138A thru 138D	0
8 thru 11	0	81	0	139 thru 143	0
11A thru 11C	0	81A thru 81C	0	143A thru 143C	0
11D blank	0	81D blank	0	143D blank	0
12 thru 17	0	82	0	144 thru 149	0
17A	0	83	0	149A thru 149C	0
17B blank	0	83A	0	149D blank	0
18 thru 21	0	83B blank	0	150 thru 155	0
21A thru 21C	0	84	0	155A	0
21D blank	0	85	0	155B	0
22 thru 25	0	85A	0	155C blank	0
25A	0	85B	0	155D thru 155H	0
25B blank	0	86 thru 88	0	155J thru 155N	0
25C	0	88A blank	0	155P blank	0
25D	0	88B thru 88G	0	156	0
26 thru 29	0	88H blank	0	157	0
29A	0	89	0	157A	0
29B blank	0	90	0	157B blank	0
29C	0	91 blank	0	157C	0
29D	0	92 thru 97	0	157D	0
30 thru 33	0	97A thru 97C	0	158	0
33A	0	97D blank	0	159	0

Upon receipt of the second and subsequent changes to this book, personnel responsible for maintaining this publication in current status should ascertain that all previous changes have been received and incorporated.

* The asterisk indicates pages changed, added, or deleted by the current change.

INSERT LATEST CHANGED PAGES. DESTROY SUPERSEDED PAGES.

LIST OF EFFECTIVE PAGES

Dates of issue for original and changed pages are:

Original . . . 0 . . . 15 June 1974

Page No.	Change No.
159A	0
159B blank	0
159C thru 159F	0
160 thru 171	0
171A thru 171H	0
171J thru 171N	0
171P	0
171Q	0
171R blank	0
171S thru 171V	0
172 thru 177	0
177A	0
177B blank	0
177C thru 177F	0
178	0
179	0
179A	0
179B blank	0
180	0
181	0
181A thru 181H	0
181J	0
181K	0
182 thru 184	0
184A thru 184D	0
185	0
186	0
186A	0
186B	0
187	0
187A	0
187B	0
188 thru 193	0
193A thru 193D	0
194 thru 196	0
196A thru 196C	0
196D blank	0
196E	0
196F	0
197	0
197A	0
197B	0
198	0
199	0
199A	0
199B	0
200 thru 203	0
203A thru 203H	0
204 thru 209	0
209A	0
209B blank	0
210 thru 215	0
215A	0
215B	0
216	0
217	0
217A thru 217C	0
217D blank	0
218	0
219	0
219A	0
219B blank	0
220	0
221	0
221A	0
221B blank	0
222 thru 225	0
225A	0
225B	0
226 thru 228	0
228A	0
228B	0
229	0
229A	0
229B	0
230	0
230A	0
230B	0
230C blank	0
230D thru 230H	0
231 thru 239	0
239A	0
239B blank	0
240	0
241	0
241A	0
241B	0
242 thru 244	0
244A blank	0
244B	0
245 thru 247	0
247A	0
247B blank	0
248 thru 250	0
250A thru 250D	0
251 thru 259	0
259A	0
259B	0
260 thru 262	0
263 blank	0
264 thru 271	0
271A	0
271B	0
272 thru 275	0
275A	0
275B blank	0
275C	0
275D	0
276 thru 285	0
285A thru 285H	0
285J thru 285M	0
286	0
287	0
287A	0
287B	0
288 thru 291	0
291A thru 291H	0
291J	0
291K	0
292 thru 294	0
294A	0
294B	0
295 thru 297	0
297A	0
297B	0
298 thru 300	0
301 blank	0
301A thru 301D	0
302	0
303	0
303A	0
303B	0
304	0
304A	0
304B	0
305 thru 308	0
308A thru 308C	0
308D blank	0
309 thru 326	0
327 blank	0
328 thru 339	0
340 blank	0
341 thru 403	0
404 blank	0

Upon receipt of the second and subsequent changes to this book, personnel responsible for maintaining this publication in current status should ascertain that all previous changes have been received and incorporated.

* The asterisk indicates pages changed, added, or deleted by the current change.

INTRODUCTION.

This illustrated parts catalog has been prepared to aid you in easily and quickly identifying parts of the models covered herein.

This catalog features an index system consisting of:

1. An alphabetical index located in the front of the catalog.

2. A numerical index located in the back of the catalog, which lists all parts and figures in which they appear.

STANDARD PARTS.

Many parts having standard usage have been incorporated into the Cessna Standard System. Parts in this group are designated with the part number prefix "S".

For standard hardware items such as Tinnerman nuts, clamps, etc., "AN" and "NAS" numbers have been used.

USABLE ON CODES....Serial listings in this catalog are noted by a letter code located in the usable on code column which is the extreme right hand column of the parts list page. Usable on codes are applicable only to the figure on which they appear. The code letters and the serials to which they apply are listed at the end of the figure.

If no usable on code appears opposite a first column listing of the figure, the usage is applicable to all models and serials covered by this catalog. If no usable on code appears opposite any indented listing, the usage is applicable to all models and serials covered by the figure on which it appears.

Bold face type serials appearing on certain figures are for quick reference to large blocks of airplanes.

NON-INTERCHANGEABLE PARTS....When parts are not interchangeable with earlier models, all parts applicable to the particular usage are listed. The letter code for the individual part usage is listed in the usable on column opposite each part. Care should be exercised in determining proper serial when ordering to insure receipt of correct part.

INTERCHANGEABLE PARTS....When a later design part is completely interchangeable with the part it replaces, both parts will be serialized and the notation "when exhausted use___", or the abbreviation, "WEU ___" will be entered following the listing of the earlier design part. This means that the earlier design part should be used on airplanes to which they apply until the supply of these parts is exhausted---after which time the later design part must be used. This is done to simplify stocking of parts by our distributors and dealers. The earlier part is as good, physically and functionally, as the later design part---the difference being the later design part can be used on more than one block of airplane serials.

SYMBOLS & PART NUMBER TERMS.

NP - The symbol "NP" appearing in the units per assembly column denotes that the item it appears opposite is not procurable.

AR - The symbol "AR" appearing in the units per assembly column denotes "As Required" and is used to indicate bulk quantity where an indefinite amount is used.

The following is a list of abbreviations that may appear in the description nomenclature:

ALT - Alternate part	INSTL - Installation
ASSY - Assembly	LH - Left hand
BKI - Bulk item	RH - Right hand
FSO - For spares order	WEU - When exhausted use

Other key letter symbols spaced apart from and following the part nomenclature are for cataloging and manufacturing purposes only and are not to be considered by the customer.

A blank entry in the part number column appears before an unprocurable part or installation which is also denoted in the "Units Per Assembly" column by the use of the symbol NP.

GROUP ASSEMBLY PARTS LIST ARRANGEMENT.

This section lists all replaceable items in the airplane and these items are detailed on illustrations throughout the section. The index numbers on the illustration are keyed to each accompanying parts list. The purpose of the index numbers is to provide complete and positive identification of the article, but should not be used for procurement purposes.

a. The figure and index number column of the parts list shows the figure number once at the beginning of the list. The figure number is followed by a dash and the indexed number. The remaining index numbers are preceded by dash only.

b. The part number column identifies the item by part number.

c. In the description column, relationship of items covered is shown by the degree of indention of each item, for example: The wing assembly (Figure 3) is listed in column (1) of the description column. The wing structure, is the next lower assembly and is therefore listed in column (2).

d. If two or more assemblies contain a majority of identical parts or the assemblies are left or right hand, the assemblies are listed together and the next lower assemblies or detail parts are listed as common for both assemblies, with the differing parts coded for usage on the correct major assembly.

e. Attaching parts are listed immediately beneath the item to be attached and preceding any detail parts of the item. They are listed in the same column as the item they attach and are preceded by the caption "Attaching Parts." The end of the attaching parts listing is followed by a separating symbol ---*---.

f. The quantity listed in the "Units Per Assembly" column for attaching parts denotes the quantity necessary to attach only one part. Total quantity necessary to attach more than one part is obtained by multiplying the attaching parts quantity by the number of parts attached.

g. Component parts of the complete airplane which are not included in any assembly, but which are used in conjunction with, or attach to certain assemblies, are listed either preceding the first detail or following the last detail of the assembly or installation, and in the same column as the major assembly or installation.

h. The quantities listed in the "Units Per Assembly" column are the quantity used per figure.

ACCESSORY KITS.

For accessory kit listings, refer to separate Accessory Kit Catalog.

BULK ITEMS.

Certain items such as flexible air hose, rubber mouldings and channels, windshield sealing strips etc., are noted in the catalog listings as bulk items. These listings also note the cut length of these materials for one installation. When an item is listed as a bulk item, it will be supplied to the dealer in the most convenient bulk length or quantity. Reference to the cut length or quantity per installation provides for the most satisfactory disbursement to the customer.

HOW TO ORDER.

USE YOUR CATALOG TO ORDER PARTS. Use parts and Accessories Order Form, which will be supplied by Cessna on request. Give complete information on addresses and make sure the part number and part name are as shown in the catalog. Be sure to specify quantities. Specify how the order is to be shipped, otherwise it will be sent out in the manner that seems best to the shipper.

SERIAL, COLOR, & CORROSION PROOFING.

Be sure to indicate model and serial number of the airplane. Serial number is very important to properly identify parts used on each airplane. When color is involved refer to "Upholstery & Interior Trim" section for example. If corrosion proofing is desired add the letters "CP" following the part number.

DISTRIBUTOR ORDERS.

Distributors will send all orders to the factory with instructions as to the shipping destination. The factory prefers not to make C.O.D. shipments for the distributor and all billing will be made to the distributor in the case of direct shipments.

DEALER ORDERS.

Dealers will place all of their parts order requirements with their distributor. The factory will not honor orders received directly from a dealer. It will be necessary for us to forward it to the distributor for his action. Therefore, dealer orders sent direct to the distributor will result in much faster delivery on any parts that are required.

RETAIL ORDERS.

Retail orders will not be honored by the factory. They are to be placed with the dealer or distributor in the owner's territory and when received directly by the factory will be forwarded to the distributor from whose territory it was received. Considerable saving in time will result to the owner if his orders are placed with his dealer or distributor.

Cessna

Cessna Aircraft Company reserves the right to cancel, add or change the parts and assemblies described in this catalog without notice.

Cessna

"All aircraft, regardless of manufacturer, are certificated under model number designations. However, popular names are often used for marketing purposes. To provide a consistent method of referring to the various aircraft, model numbers will be used in this publication unless names are required to differentiate between versions of the same basic model. The following table provides a cross reference listing of popular name vs. model numbers."

NAME	MODEL YEAR	MODEL	SERIALS	
			BEGINNING	ENDING
180	1963 1964 1965 1966 1967 1968	180F 180G 180H 180H 180H 180H	18051184 18051313 18051446 18051608 18051775 18051876	18051312 18051445 18051607 18051774 18051875 18051993
SKYWAGON 180	1969 1970 THRU 1972 1973	180H 180H 180J	18051994 18052104 18052285	18052103 18052284 18052384
185 SKYWAGON (260 HP ENGINE)	1961 1962 1963 1964 1965 1966	185 185A 185B 185C 185D 185E	185-0001 185-0238 185-0513 185-0654 185-0777 185-0968	185-0237 185-0512 185-0653 185-0776 185-0967 185-1149
185 SKYWAGON (300 HP ENGINE)	1966 1967 1968	A185E A185E A185E	185-0968 185-1150 185-1301	185-1149 185-1300 185-1447
SKYWAGON 185	1969 1970 THRU 1972 1973	A185E A185E A185F	185-1448 18501600 18502091	185-1599 18502090 18502310
AGcarryall	1972 1973	A185E A185F	18501935 18502091	18502090 18502310

FINISH & TRIM PLATE

The "FINISH AND TRIM" plate is located on the left side of the airplane on the lower door jamb directly above the M.A.A. name plate.

This plate indicates the model year, exterior paint color, upholstery scheme and interior trim colors.

The following diagram is an example showing the sequence and definition of each code symbol on the "FINISH AND TRIM" plate.

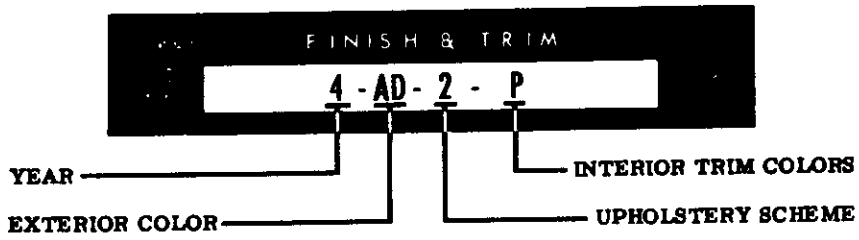

FINISH & TRIM NUMBER (4-AD-2-P)
"4" = 1964 Model
"AD" = Emerald Green Met. & Mint Green
"2" = Sorrel Brown Upholstery
"P" = Black Semi-Gloss, Sand & Fawn

1961 THRU 1965

SEE PAGE VIII FOR 1966 & ON

CODE CHART
PAINT & UPHOLSTERY COMBINATIONS
Model 185

Serial Listing

CODE	CODE	COLOR	CODE	COLOR	CODE	COLOR	Serial Listing
1	O	CLASSIC IVORY CES 1054-325	2	PINE FROST (GREEN)	Z	BLACK (SEMI-GLOSS) CES 1054-156	185-0001 THRU 185-0237
	P	STARGLO YELLOW CES 1054-326					
	Q	RANGOON RED CES 1054-327					
	R	NOCTURNAL GREEN CES 1054-328					
	S	SPRING GREEN CES 1054-329					
	T	ORCHID CES 1054-330	3	COPPER COTTA		NATURAL CES 1054-259	
	V	DUSK BLUE CES 1054-333					
	W	CELESTIAL BLUE CES 1054-334					
	X	WINCHESTER GRAY CES 1054-335					
	Y	COPPERTONE BROWN CES 1054-336					
	SP	SPECIAL COLORS	1	SPECIAL UPHOLSTERY	SP	SPECIAL COLORS	

CODE CHART
PAINT & UPHOLSTERY COMBINATIONS
Model 185

Serial Listing

CODE	CODE	COLOR	CODE	COLOR	CODE	COLOR	Serial Listing
2	A	MUTED BEIGE CES 1054-439 or -399*	2	SHADOW FAWN (UTILITY)	Q	BLACK (SEMI-GLOSS) CES 1054-156	185-0238 THRU 185-0512
	B	VESTAL WHITE CES 1054-398 or -170*					
	C	JONQUIL YELLOW CES 1054-402 or -416*					
	D	MINT GREEN CES 1054-238 or -412*					
	E	TURQUOISE TINGE CES 1054-406 or -393*	3	PALMETTO GREEN			
	F	VALOR RED CES 1054-409 or -417*					
	G	CHEVRON RED CES 1054-401					
	H	GINGER CES 1054-403					
	J	REGAL GREEN MET. CES 1054-404	4	POMPEII RUST		NATURAL CES 1054-259	
	K	TAHOE BLUE MET. CES 1054-407					
	L	HERMOSA TURQUOISE CES 1054-408					
	M	DEEP MAHOGANY CES 1054-413					
	N	EXECUTIVE GRAY MET. CES 1054-411					
	SP	SPECIAL COLORS	1	SPECIAL UPHOLSTERY	SP	SPECIAL COLORS	

NOTE: WHEN ORDERING PAINT SPECIFY CES 1054 DASH NUMBER. EXAMPLE: CES1054-439

*On all over painted airplanes, base color will be vinyl. All other colors will be lacquer.

CODE CHART
PAINT & UPHOLSTERY COMBINATIONS
Model 180 & 185

YEAR	CODE	EXTERIOR PAINT CODE	EXTERIOR PAINT COLOR	UPHOLSTERY CODE	UPHOLSTERY COLOR	INTERIOR TRIM CODE	INTERIOR TRIM COLOR	Serial Listing
1963	3	A	ADOBE BEIGE CES-1054-446 or -458*	2	JADE (A)	Q	BLACK (SEMI-GLOSS) CES-1054-156	18051184 THRU 18051312 185-0513 THRU 185-0653
		B	VESTAL WHITE CES-1054-398 or -170*					
		C	GOLDENROD CES-1054-448	3	CRIMSON FLAME (B)			
		D	MINT GREEN CES-1054-238 or -412*					
		E	PLATINUM BLUE CES-1054-443 or -392*	4	BLUE CRANE (C)		SAND CES-1054-435	
		F	VALOR RED CES-1054-409					
		G	MATADOR RED CES-1054-465					
		K	TAHOE BLUE METALLIC CES-1054-407	5	FRECKLE BROWN (D)			
		N	EXECUTIVE GREY METALLIC CES-1054-411				FAWN CES-1054-419	
		R	COCOA BROWN CES-1054-459	6	NORTH STAR (E)			
		U	EMERALD CES-1054-350 or -461*					
		SP	SPECIAL COLORS	1	SPECIAL UPHOLSTERY	SP	SPECIAL COLORS	
1964	4	A	EMERALD GREEN MET CES-1054-350	2	SORREL BROWN	P	BLACK SEMI-GLOSS CES-1054-156	18051313 THRU 18051445 185-0654 THRU 185-0776
		B	GOLDENROD CES-1054-448					
		C	VESTAL WHITE CES-1054-398 or -170*					
		D	MINT GREEN CES-1054-238 or -412*	3	MUTED BLUE			
		E	CORK BROWN CES-1054-463					
		G	MUTED BEIGE CES-1054-439 or -399*	4	COPPERICA RED		SAND CES-1054-435	
		J	ITALIAN GOLD CES-1054-265					
		K	VELVET BLACK CES-1054-151					
		L	SUN GLOW RED CES-1054-493	5	PRIMITIVE GREEN			
		T	HAWAIIAN RED CES-1054-509				FAWN CES-1054-419	
		X	SKY BLUE CES-1054-513 or -512*	6	GOLDEN FAWN (UTILITY)			
		Z	ARISTO BLUE MET. CES-1054-487					
		SP	SPECIAL COLORS	1	SPECIAL UPHOLSTERY	SP	SPECIAL COLORS	

NOTE: WHEN ORDERING PAINT SPECIFY CES-1054 DASH NUMBER. EXAMPLE CES-1054-350.

*DENOTES VINYL PAINT.
VINYL IS USED AS BASE COLOR ON OVER-ALL PAINTED AIRPLANES.
ALL OTHER COLORS ARE LACQUER.

CODE CHART
PAINT & UPHOLSTERY COMBINATIONS
Model 180 & 185

YEAR	CODE	EXTERIOR PAINT CODE	EXTERIOR PAINT COLOR	UPHOLSTERY CODE	UPHOLSTERY COLOR	INTERIOR TRIM CODE	INTERIOR TRIM COLOR	Serial Listing
1965	5	A	EMERALD GREEN CES-1054-350	22	SABLE TAN (STANDARD)	P	BLACK SEMI-GLOSS CES-1054-156	18051446 THRU 18051607
		B	GOLDENROD CES-1054-448					
		C	VESTAL WHITE CES-1054-398 or -170*					
		D	ICE BLUE CES-1054-564 or -546*					
		F	YUMA YELLOW CES-1054-542					
		H	PLATINUM CES-1054-550 or -565*					
		J	SUNSHINE YELLOW CES-1054-561 or 547*					
		K	VELVET BLACK CES-1054-151	23	TAWNY MIST (DELUXE)		CLOUD GRAY CES-1054-531	185-0777 THRU 185-0967
		L	SUN GLOW RED CES-1054-493					
		M	Venice Blue Metallic CES-1054-572					
		N	AUTUMN RUSSET MET CES-1054-571					
		R	ARISTO BLUE MET CES-1054-487					
		T	HAWAIIAN RED CES-1054-509					
		SP	SPECIAL COLORS	1	SPECIAL UPHOLSTERY	SP	SPECIAL COLORS	

NOTE: WHEN ORDERING PAINT SPECIFY CES-1054 DASH NUMBER. EXAMPLE CES-1054-350.

*DENOTES VINYL PAINT.
VINYL IS USED AS BASE COLOR ON OVER-ALL PAINTED AIRPLANES.
ALL OTHER COLORS ARE LACQUER.

FINISH & TRIM PLATE

The "FINISH AND TRIM" plate is located on the left side of the airplane on the lower forward door opening above the M.A.A. nameplate.

This plate indicates model year, interior color scheme and the exterior color combination.

Interpretation of information stamped on the Finish and Trim Plate is obtained by use of the Color Code Chart for the respective year.

Color Code Charts for yearly models appear on pages immediately following this page.

The Finish and Trim Plate is explained below. Explanatory remarks are keyed to the illustrated example.

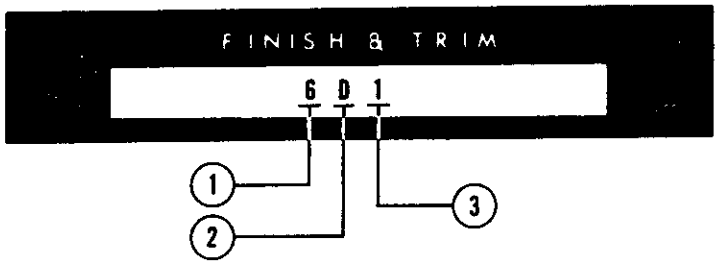

(1) First column number indicates year.

(2) Second column letter or letters indicate interior color code of aircraft. Refer to Color Code Chart for respective year to obtain color.

(3) Third column number or numbers indicate exterior trim. The basic number is found on the Color Code Chart and indicates colors and type paint used on the aircraft.

200, 2000 or 4000 series numbers in column 3 denote an optional overall paint scheme.

300, 3000 or 30000 series numbers in column 3 denote paint scheme reversal for arctic usage.

Interpretation of the example Finish and Trim Code 6-D-1 that is obtained from 1966 Color Code Chart is:

6 = 1966 Model Year
D = Bronze & Sable Tan Interior
1 = Vestal White & Goldenrod Exterior

1966 & ON

SEE PAGE III FOR 1961 THRU 1965

MODEL 180 & 185

PAINT CODE CHART

MODEL 180 & 185

YEAR	CODE	INTERIOR COLOR CODE	INTERIOR COLOR	INTERIOR PAINT (INTERIOR COLOR CODE) D	INTERIOR PAINT (INTERIOR COLOR CODE) K	SERIAL LISTING
1966	6	D	BRONZE & SABLE TAN	BLACK (SEMI - GLOSS) CES1054-156	BLACK (SEMI - GLOSS) CES1054-156	18051608 THRU 18051774 185-0968 THRU 185-1149
				DULL BLACK CES1054-193	DULL BLACK CES1054-193	
		K	BRONZE & TAWNY MIST	CLOUD GRAY CES1054-531	CLOUD GRAY CES1054-531	
				BRONZE CES1054-719	BRONZE CES1054-719	

EXTERIOR PAINT

CODE	COLOR COMBINATIONS		
1	VESTAL WHITE CES1054-398 or 170*	GOLDEN ROD CES1054-448	
2	VESTAL WHITE CES1054-398 or 170*	SAN REMO TURQUOISE CES1054-705	
3	VESTAL WHITE CES1054-398 or 170*	RACING GREEN CES1054-692	
4	VESTAL WHITE CES1054-398 or 170*	VALOR RED CES1054-409	
5	VESTAL WHITE CES1054-398 or 170*	VELVET BLACK CES1054-151	
6	VESTAL WHITE CES1054-398 or 170*	MIDNIGHT TURQUOISE MET. CES1054-801	
7	VESTAL WHITE CES1054-398 or 170*	HAWAIIAN RED CES1054-509	
8	VESTAL WHITE CES1054-398 or 170*	AUTUMN RUSSET MET. CES1054-571	

NOTE: WHEN ORDERING PAINT SPECIFY CES-1054 DASH NUMBER. EXAMPLE: CES1054-439

*On all over painted airplanes, base color will be vinyl. All other colors will be lacquer.

PAINT CODE CHART

MODEL 180 & 185

YEAR	INTERIOR COLOR CODE	INTERIOR COLOR CODE	INTERIOR COLOR COLOR	INTERIOR PAINT — INTERIOR COLOR CODE AF	SERIAL LISTING
1	7	AF	BRONZE FABRIC	BLACK (SEMI GLOSS LACQUER) CES1054-156	18051775 THRU 18051875
9	7	AF	BRONZE FABRIC	DULL BLACK (LACQUER) CES1054-193	18051775 THRU 18051875
6	7	AF	BRONZE FABRIC	CLOUD GRAY (LACQUER) CES1054-531	185-1150 THRU 185-1300
7	7	AF	BRONZE FABRIC	BRONZE (LACQUER) CES1054-719	185-1150 THRU 185-1300
	7	AF	BRONZE FABRIC	BRONZE (VINYL) CES1054-751	185-1150 THRU 185-1300

EXTERIOR PAINT

CODE	COLOR COMBINATIONS	
	VESTAL WHITE	GOLDEN ROD
1	CES1054-398 (LACQUER)	CES1054-448 (LACQUER)
201	CES1054-170 (VINYL)	CES1054-448 (LACQUER)
301	CES1054-802 (ACRYLIC)	CES1054-803 (ACRYLIC)
	VESTAL WHITE	VALOR RED
2	CES1054-398 (LACQUER)	CES1054-409 (LACQUER)
202	CES1054-170 (VINYL)	CES1054-409 (LACQUER)
302	CES1054-802 (ACRYLIC)	CES1054-806 (ACRYLIC)
	VESTAL WHITE	IMPERIAL BURGUNDY MET.
3	CES1054-398 (LACQUER)	CES1054-847 (LACQUER)
203	CES1054-170 (VINYL)	CES1054-847 (LACQUER)
303	CES1054-802 (ACRYLIC)	CES1054-767 (ACRYLIC)
	VESTAL WHITE	VELVET BLACK
4	CES1054-398 (LACQUER)	CES1054-151 (LACQUER)
204	CES1054-170 (VINYL)	CES1054-151 (LACQUER)
304	CES1054-802 (ACRYLIC)	CES1054-807 (ACRYLIC)
	VESTAL WHITE	BELFAST BROWN
5	CES1054-398 (LACQUER)	CES1054-773 (ACRYLIC)
205	CES1054-170 (VINYL)	CES1054-773 (ACRYLIC)
305	CES1054-802 (ACRYLIC)	CES1054-773 (ACRYLIC)
	VESTAL WHITE	EMPRESS BLUE
6	CES1054-398 (LACQUER)	CES1054-604 (LACQUER)
206	CES1054-170 (VINYL)	CES1054-604 (LACQUER)
306	CES1054-802 (ACRYLIC)	CES1054-832 (ACRYLIC)
	VESTAL WHITE	VENICE BLUE MET.
7	CES1054-398 (LACQUER)	CES1054-572 (LACQUER)
207	CES1054-170 (VINYL)	CES1054-572 (LACQUER)
307	CES1054-802 (ACRYLIC)	CES1054-833 (ACRYLIC)
	VESTAL WHITE	RACING GREEN
8	CES1054-398 (LACQUER)	CES1054-692 (LACQUER)
208	CES1054-170 (VINYL)	CES1054-692 (LACQUER)
308	CES1054-802 (ACRYLIC)	CES1054-805 (ACRYLIC)

NOTE: WHEN ORDERING PAINT SPECIFY CES-1054 DASH NUMBER. EXAMPLE: CES1054-170

NOTE: Finish & trim plates on which the fourth column color code numbers are preceded by the letter "A" denotes that the airplane is painted with all Acrylic paint colors. To order paint for these airplanes use the equivalent 300 Series Code No. for the desired color as called out on this paint chart.

EXAMPLE:

A5 - Refer to 305 for the correct Acrylic paint color part number.

A207 - Refer to 307 for the correct Acrylic paint color part number.

MODEL 180 & 185 — **PAINT CODE CHART** — MODEL 180 & 185

YEAR	INTERIOR COLOR CODE	INTERIOR COLOR CODE	INTERIOR COLOR COLOR	INTERIOR PAINT — INTERIOR COLOR CODE AF		SERIAL LISTING	EXTERIOR PAINT CODE	COLOR COMBINATIONS		
1968	8	AF	Bronze Fabric	BLACK (SEMI GLOSS LACQUER) CES1054-156		18051876 THRU 18051993	10, 210, 310	VESTAL WHITE CES1054-802 (ACRYLIC)	TROPICAL ORANGE CES1054-774 (ACRYLIC)	
							11, 211, 311	VESTAL WHITE CES1054-802 (ACRYLIC)	VALOR RED CES1054-806 (ACRYLIC)	
				DULL BLACK (LACQUER) CES1054-193			12, 212, 312	VESTAL WHITE CES1054-802 (ACRYLIC)	CRANBERRY CES1054-875 (ACRYLIC)	
				CLOUD GRAY (LACQUER) CES1054-531		185-1301 THRU 185-1447	13, 213, 313	VESTAL WHITE CES1054-802 (ACRYLIC)	EMPRESS BLUE CES1054-832 (ACRYLIC)	
							14, 214, 314	VESTAL WHITE CES1054-802 (ACRYLIC)	VENICE BLUE MET. CES1054-833 (ACRYLIC)	
				TAN (VINYL) CES1054-749			15, 215, 315	VESTAL WHITE CES1054-802 (ACRYLIC)	VELVET BLACK CES1054-807 (ACRYLIC)	
							16, 216, 316	VESTAL WHITE CES1054-802 (ACRYLIC)	RACING GREEN CES1054-805 (ACRYLIC)	
				TAN (LACQUER) CES1054-717			17, 217, 317	VESTAL WHITE CES1054-802 (ACRYLIC)	GOLDEN ROD CES1054-803 (ACRYLIC)	

NOTE: WHEN ORDERING PAINT SPECIFY CES-1054 DASH NUMBER. EXAMPLE: CES1054-802

MODEL 180 & 185

PAINT CODE CHART

MODEL 180 & 185

YEAR		INTERIOR COLOR		INTERIOR PAINT — INTERIOR COLOR CODE			SERIAL LISTING	EXTERIOR PAINT		
	CODE	CODE	COLOR	AF	BF	KF		CODE	COLOR COMBINATIONS	
1969	9	AF	Bronze & Tan	BLACK (SEMI GLOSS LACQUER) CES1054-156	BLACK (SEMI GLOSS LACQUER) CES1054-156	BLACK (SEMI GLOSS LACQUER) CES1054-156	18051994 THRU 18052103	901 2901 3901	VESTAL WHITE CES1054-802 (ACRYLIC)	VALOR RED CES1054-806 (ACRYLIC)
				DULL BLACK (LACQUER) CES1054-193	DULL BLACK (LACQUER) CES1054-193	DULL BLACK (LACQUER) CES1054-193		902 2902 3902	VESTAL WHITE CES1054-802 (ACRYLIC)	BAROQUE GOLD MET. CES1054-913 (ACRYLIC)
								903 2903 3903	VESTAL WHITE CES1054-802 (ACRYLIC)	GOLDEN ROD CES1054-803 (ACRYLIC)
		BF	Royal Blue	LIGHT GRAY (LACQUER) CES1054-531	LIGHT GRAY (LACQUER) CES1054-531	LIGHT GRAY (LACQUER) CES1054-531	185-1448 THRU 185-1599	904 2904 3904	VESTAL WHITE CES1054-802 (ACRYLIC)	BELFAST BROWN CES1054-773 (ACRYLIC)
								905 2905 3905	VESTAL WHITE CES1054-802 (ACRYLIC)	NORDIC BLUE MET. CES1054-778 (ACRYLIC)
				TAN (VINYL) CES1054-749	TAN (VINYL) CES1054-749	TAN (VINYL) CES1054-749		906 2906 3906	VESTAL WHITE CES1054-802 (ACRYLIC)	CATALINA BLUE MET. CES1054-914 (ACRYLIC)
		KF	Apple Red					907 2907 3907	VESTAL WHITE CES1054-802 (ACRYLIC)	IMPERIAL BURGUNDY MET. CES1054-767 (ACRYLIC)
				TAN (LACQUER) CES1054-717	TAN (LACQUER) CES1054-717	TAN (LACQUER) CES1054-717		908 2908 3908	VESTAL WHITE CES1054-802 (ACRYLIC)	EMERALD GREEN MET. CES1054-846 (ACRYLIC)

NOTE: WHEN ORDERING PAINT SPECIFY CES-1054 DASH NUMBER. EXAMPLE: CES1054-802

MODELS 180 & 185 — **PAINT CODE CHART** — MODELS 180 & 185

YEAR	INTERIOR COLOR CODE	INTERIOR COLOR CODE	INTERIOR COLOR COLOR	INTERIOR PAINT (INTERIOR COLOR CODE) AP	BP	MP	SERIAL LISTING
1970	O	AP	Clove Brown	BLACK SEMI-GLOSS CES1054-156 LACQUER	BLACK SEMI-GLOSS CES1054-156 LACQUER	BLACK SEMI-GLOSS CES1054-156 LACQUER	18052104 THRU 18052175
				LIGHT GRAY CES1054-531 LACQUER	LIGHT GRAY CES1054-531 LACQUER	LIGHT GRAY CES1054-531 LACQUER	
		BP	Silver Teal Blue	CLOVE BROWN CES1054-970 LACQUER	CLOVE BROWN CES1054-970 LACQUER	CLOVE BROWN CES1054-970 LACQUER	18501600 THRU 18501832
		MP	Marigold	CLOVE BROWN CES1054-985 VINYL	CLOVE BROWN CES1054-985 VINYL	CLOVE BROWN CES1054-985 VINYL	

EXTERIOR PAINT

CODE	COLOR COMBINATIONS		
760, 2760, 32760	VESTAL WHITE CES1054-802	PROVINCIAL RED MET CES1054-963	
5760, 4760, 34760	LUSTER WHITE CES1054-967		
761, 2761, 32761	VESTAL WHITE CES1054-802	BLACK CHERRY MET CES1054-964	
5761, 4761, 32761	LUSTER WHITE CES1054-967		
762, 2762, 32762	VESTAL WHITE CES1054-802	VALOR RED CES1054-808	
5762, 4762, 34762	LUSTER WHITE CES1054-967		
763, 2763, 32763	VESTAL WHITE CES1054-802	ITALIAN GOLD CES1054-834	
5763, 4763, 32763	LUSTER WHITE CES1054-967		
764, 2764, 32764	VESTAL WHITE CES1054-802	OLIVE CES1054-844	
5764, 4764, 34764	LUSTER WHITE CES1054-967		
765, 2765, 32765	VESTAL WHITE CES1054-802	GLENWOOD GREEN MET CES1054-768	
5765, 4765, 34765	LUSTER WHITE CES1054-967		
766, 2766, 32766	VESTAL WHITE CES1054-802	BLUE WING MET CES1054-968	
5766, 4766, 34766	LUSTER WHITE CES1054-967		
767, 2767, 32767	VESTAL WHITE CES1054-802	VENICE BLUE MET CES1054-833	
5767, 4767, 34767	LUSTER WHITE CES1054-967		
768, 2768, 32768	VESTAL WHITE CES1054-802	VELVET BLACK CES1054-807	
5768, 4768, 34768	LUSTER WHITE CES1054-967		
769, 2769, 32769	VESTAL WHITE CES1054-802	TIGER YELLOW CES1054-966	
5769, 4769, 34769	LUSTER WHITE CES1054-967		

NOTE: WHEN ORDERING PAINT SPECIFY CES-1054 DASH NUMBER EXAMPLE: CES1054-802

MODELS 180 & 185 — PAINT CODE CHART — MODELS 180 & 185

YEAR	INTERIOR COLOR CODE	INTERIOR COLOR CODE	INTERIOR COLOR	INTERIOR PAINT (INTERIOR COLOR CODE) AP	BH	BP	SERIAL LISTING
1971	1	AP	Clove Brown	BLACK SEMI-GLOSS CES1054-156 LACQUER	BLACK SEMI-GLOSS CES1054-156 LACQUER	BLACK SEMI-GLOSS CES1054-156 LACQUER	18052176 THRU 18052284
				LIGHT GRAY CES1054-531 LACQUER	LIGHT GRAY CES1054-531 LACQUER	LIGHT GRAY CES1054-531 LACQUER	
		BH	Holiday Blue	CLOVE BROWN CES1054-970 LACQUER	CLOVE BROWN CES1054-970 LACQUER	CLOVE BROWN CES1054-970 LACQUER	
				CLOVE BROWN CES1054-985 VINYL	CLOVE BROWN CES1054-985 VINYL	CLOVE BROWN CES1054-985 VINYL	
		BP	Silver Teal Blue				
				INTERIOR PAINT (INTERIOR COLOR CODE) DP	MP		18501833 THRU 18502090
				BLACK SEMI-GLOSS CES1054-156 LACQUER	BLACK SEMI-GLOSS CES1054-156 LACQUER	BLACK SEMI-GLOSS CES1054-156 LACQUER	
		DP	Fiesta Red	LIGHT GRAY CES1054-531 LACQUER	LIGHT GRAY CES1054-531 LACQUER	LIGHT GRAY CES1054-531 LACQUER	
				CLOVE BROWN CES1054-970 LACQUER	CLOVE BROWN CES1054-970 LACQUER	CLOVE BROWN CES1054-970 LACQUER	
		MP	Marigold	CLOVE BROWN CES1054-985 VINYL	CLOVE BROWN CES1054-985 VINYL	CLOVE BROWN CES1054-985 VINYL	

EXTERIOR PAINT

CODE	COLOR COMBINATIONS	
141V V141V	VESTAL WHITE CES1054-802	PROVINCIAL RED MET CES1054-943
141L L141L	LUSTER WHITE CES1054-967	
147V V147V	VESTAL WHITE CES1054-802	BLACK CHERRY MET CES1054-964
147L L147L	LUSTER WHITE CES1054-967	
142V V142V	VESTAL WHITE CES1054-802	VALOR RED CES1054-806
142L L142L	LUSTER WHITE CES1054-967	
143V V143V	VESTAL WHITE CES1054-802	ITALIAN GOLD CES1054-834
143L V143L	LUSTER WHITE CES1054-967	
144V V144V	VESTAL WHITE CES1054-802	OLIVE CES1054-944
144L L144L	LUSTER WHITE CES1054-967	
148V V148V	VESTAL WHITE CES1054-802	GLENWOOD GREEN MET CES1054-768
148L L148L	LUSTER WHITE CES1054-967	
149V V149V	VESTAL WHITE CES1054-802	BLUE WING MET CES1054-966
149L L149L	LUSTER WHITE CES1054-967	
145V V145V	VESTAL WHITE CES1054-802	VENICE BLUE MET CES1054-833
145L L145L	LUSTER WHITE CES1054-967	
150V V150V	VESTAL WHITE CES1054-802	VELVET BLACK CES1054-807
150L L150L	LUSTER WHITE CES1054-967	
146V V146V	VESTAL WHITE CES1054-802	TIGER YELLOW CES1054-966
146L L146L	LUSTER WHITE CES1054-967	
240A *	VESTAL WHITE CES1054-802	SUNSET RED CES1054-806 VELVET BLACK CES1054-807
241A *	VESTAL WHITE CES1054-802	HORIZON BLUE CES1054-832 VELVET BLACK CES1054-807
242A *	VESTAL WHITE CES1054-802	TIGER ORANGE CES1054-774 VELVET BLACK CES1054-807
240P ‡	VESTAL WHITE CES1054-A64	SUNSET RED CES1054-A67 VELVET BLACK CES1054-A77
241P ‡	VESTAL WHITE CES1054-A64	HORIZON BLUE CES1054-A75 VELVET BLACK CES1054-A77
242P ‡	VESTAL WHITE CES1054-A64	TIGER ORANGE CES1054-A65 VELVET BLACK CES1054-A77
243P ‡	VESTAL WHITE CES1054-A64	WILDCAT YELLOW CES1054-A76 VELVET BLACK CES1054-A77

NOTE: WHEN ORDERING PAINT SPECIFY CES1054 DASH NUMBER EXAMPLE CES1054-802

* Acrylic Combinations. Used on AGcarryall.
‡ Urethane Combinations. Used on AGcarryall.

MODELS 180 & 185 — PAINT CODE CHART — MODELS 180 & 185

YEAR	INTERIOR COLOR CODE	INTERIOR COLOR CODE	INTERIOR COLOR	INTERIOR PAINT (INTERIOR COLOR CODE) AP	BP	DP	SERIAL LISTING
1973	3	AP	Clove Brown	BLACK SEMI-GLOSS CES1054-157 LACQUER	BLACK SEMI-GLOSS CES1054-157 LACQUER	BLACK SEMI-GLOSS CES1054-157 LACQUER	18052285 THRU 18052384
				LIGHT GRAY CES1054-531 LACQUER	LIGHT GRAY CES1054-531 LACQUER	LIGHT GRAY CES1054-531 LACQUER	
		BP	Holiday Blue	CLOVE BROWN CES1054-970 LACQUER	CLOVE BROWN CES1054-970 LACQUER	CLOVE BROWN CES1054-970 LACQUER	18502091 THRU 18502310
		DP	Fiesta Red	CLOVE BROWN CES1054-970 LACQUER	CLOVE BROWN CES1054-985 VINYL	CLOVE BROWN CES1054-985 VINYL	

EXTERIOR PAINT

CODE	COLOR COMBINATIONS	
302		FLAG RED CES1054-A93
302A 3302A	VESTAL WHITE CES1054-802	FLAG RED CES1054-A93
354		NUTMEG CES1054-A95
354A 3354A	VESTAL WHITE CES1054-802	NUTMEG CES1054-A95
355		TIGER YELLOW CES1054-966
355A 3355A	VESTAL WHITE CES1054-802	TIGER YELLOW CES1054-966
306		GRANADA GREEN CES1054-A97
306A 3306A	VESTAL WHITE CES1054-802	GRANADA GREEN CES1054-A97
305		EMPRESS BLUE CES1054-832
305A 3305A	VESTAL WHITE CES1054-802	EMPRESS BLUE CES1054-832
303		TROPICAL ORANGE CES1054-774
303A 3303A	VESTAL WHITE CES1054-802	TROPICAL ORANGE CES1054-774
343 3343	VESTAL WHITE CES1054-802 (ACRYLIC)	HORIZON BLUE CES1054-832 (ACRYLIC)
343P 3343P	VESTAL WHITE CES1054-A64 (URETHANE)	HORIZON BLUE CES1054-A75 (URETHANE)
344 3344	VESTAL WHITE CES1054-802 (ACRYLIC)	SUNSET RED CES1054-806 (ACRYLIC)
344P 3344P	VESTAL WHITE CES1054-A64 (URETHANE)	SUNSET RED CES1054-A67 (URETHANE)
345 3345	VESTAL WHITE CES1054-802 (ACRYLIC)	TIGER ORANGE CES1054-774 (ACRYLIC)
345P 3345P	VESTAL WHITE CES1054-A64 (URETHANE)	TIGER ORANGE CES1054-A65 (URETHANE)
346 3346	VESTAL WHITE CES1054-802 (ACRYLIC)	WILDCAT YELLOW CES1054-A15 (ACRYLIC)
346P 3346P	VESTAL WHITE CES1054-A64 (URETHANE)	WILDCAT YELLOW CES1054-A76 (URETHANE)

NOTE: WHEN ORDERING PAINT SPECIFY CES1054 DASH NUMBER. EXAMPLE CES1054-802

X

UPHOLSTERY & INTERIOR TRIM

UPHOLSTERED PARTS - HOW TO ORDER

1961 THRU 1965 MODELS

SERIAL NUMBER OF AIRCRAFT MUST BE GIVEN WITH PARTS ORDER

1966 MODEL & ON

PARTS MARKED WITH A # FOLLOWING PART NUMBER REQUIRE A SECOND DASH NUMBER FOR COLOR & MATERIAL

HOW TO DETERMINE 2nd DASH NUMBER

1. Find part number of desired part in catalog.
2. Refer to "FINISH & TRIM" plate, in the airplane, for your "Year Code" and "Interior Color Code."

3. Add the "Year Code" and "Interior Color Code," to the part number from catalog.

EXAMPLE OF COMPLETE NUMBER

0700114-44 -6 D

Part Number From Catalog

Year Code From Finish & Trim Plate

Interior Color Code From Finish & Trim Plate

INTERIOR PAINTED OR PLASTIC PARTS HOW TO ORDER

1961 THRU 1964 MODELS

No special handling is required when ordering parts for 1963 and 1964 aircraft. In this group, the second dash number appears, when required, as a part of the part number.

1965 MODEL

PARTS MARKED WITH A ▫ FOLLOWING PART NUMBER REQUIRE A SECOND DASH NUMBER FOR PROPER COLOR

To obtain second dash number use table "1965 MODEL YEAR."

To use table, "1965 MODEL YEAR," first find number from catalog then find same number in table and add number of color required.

EXAMPLE OF COMPLETE NUMBER

0511482-5 -532

Part Number From Catalog — 2nd Dash Number From Table (Cloud Gray)

1966 MODEL & ON

PARTS MARKED WITH A ▫ FOLLOWING PART NUMBER REQUIRE A SECOND DASH NUMBER FOR PROPER COLOR.

To obtain second dash number use of correct table, for your model year, is required.

To use table,

1. Find part number of desired part in catalog.
2. Refer to the "Finish and Trim" plate, in the airplane, for your "Interior Color Code."

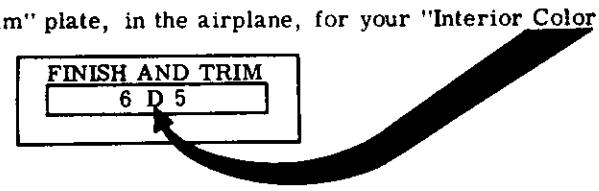

3. Locate part number from catalog in table.
4. Add dash number for color that appears under your "Interior Color Code."

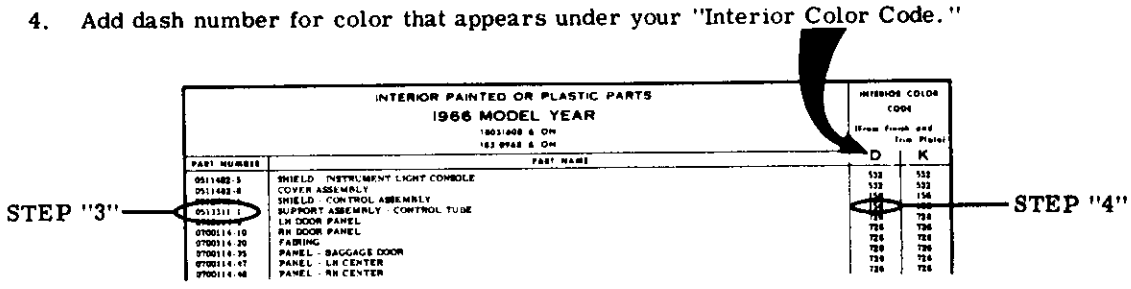

INTERIOR PAINTED OR PLASTIC PARTS
1966 MODEL YEAR

PART NUMBER	PART NAME	D	K
0511482-5	SHIELD - INSTRUMENT LIGHT CONSOLE	532	532
0511482-8	COVER ASSEMBLY	532	532
[illegible]	SHIELD - CONTROL ASSEMBLY	156	156
0513311-1	SUPPORT ASSEMBLY - CONTROL TUBE	[illegible]	[illegible]
[illegible]	LH DOOR PANEL	726	726
0700114-10	RH DOOR PANEL	726	726
0700114-20	FAIRING	726	726
0700114-35	PANEL - BAGGAGE DOOR	726	726
0700114-47	PANEL - LH CENTER	726	726
0700114-48	PANEL - RH CENTER	726	726

EXAMPLES OF COMPLETE NUMBER

0513311-1 -156

Part Number From Catalog — 2nd Dash Number From Table (Black - Semi-gloss) (Interior Color Code)

INTERIOR PAINTED OR PLASTIC PARTS

1965 MODEL YEAR ONLY

185-0777 THRU 185-0967
18051446 THRU 18051607

PART NUMBER	PART NAME	BLACK	CLOUD GRAY
0511482-5	SHIELD	532	
0511482-9	COVER ASSEMBLY-DOME LIGHT	532	
0700114-9	PANEL UPHOLSTERY DOOR LH	532	
0700114-10	PANEL UPHOLSTERY DOOR RH	532	
0700114-11	PANEL - SIDEWALL FRONT LH	532	
0700114-12	PANEL - SIDEWALL FRONT RH	532	
0700114-35	PANEL ASSEMBLY - BAGGAGE	532	
0700114-47	PANEL - AFT LH	532	
0700114-48	PANEL - AFT RH	532	
0700114-53	TUNNEL	532	
0700114-54	TUNNEL	532	
0700646-1	SKIRT - SEAT BOTTOM LH	532	
0700646-2	SKIRT - SEAT BOTTOM RH	532	
0700646-3	SKIRT - SEAT BOTTOM LH	532	
0700646-4	SKIRT - SEAT BOTTOM RH	532	
0710646-1	COVER PLATE LH	532	
0710647-1	COVER PLATE RH	532	
0710652-1	ESCUTCHEON - GAGE	532	
0711079-1	TRAY ASSEMBLY	532	
0711133-22	SHIELD ASSEMBLY - FRONT DOOR POST RH	532	
0711133-29	SHIELD ASSEMBLY - FRONT DOOR POST LH	532	
0711133-32	SHIELD ASSEMBLY - FRONT DOOR POST LH	532	
0713756-1	COVER ASSEMBLY - UPPER	532	
0713756-7	COVER ASSEMBLY - LOWER		279
0713756-8	COVER ASSEMBLY - LOWER		279
0713758-4	DOOR ASSEMBLY - GLOVE BOX		279
0713764-12	COVER - RH		279
0713764-14	COVER - RH		279
0713764-8	COVER - SHOCK PANEL		279
0713765-1	COVER - RADIO		279
0716114-1	COVER - FUEL TANK SELECTOR		279
0716114-3	COVER - FUEL TANK SELECTOR	532	
1200415-7	ESCUTCHEON - OXYGEN PORT	532	
1414110-1	TRIM - SEAT BACK	532	
1414110-3	POCKET ASSEMBLY - MAGAZINE	532	
1414264-5	POCKET ASSEMBLY - MAGAZINE	532	
1414264-13	TRIM ASSEMBLY - SEAT BACK	532	

INTERIOR PAINTED OR PLASTIC PARTS

1966 MODEL YEAR

18051608 THRU 18051774
185-0968 THRU 185-1149

PART NUMBER	PART NAME	INTERIOR COLOR CODE (From Finish and Trim Plate) D	K
0511482-5	SHIELD - INSTRUMENT LIGHT CONSOLE	532	532
0511482-9	COVER ASSEMBLY	532	532
0512046-1	SHIELD - CONTROL ASSEMBLY	156	156
0513311-1	SUPPORT ASSEMBLY - CONTROL TUBE	156	156
0700114-9	LH DOOR PANEL	726	726
0700114-10	RH DOOR PANEL	726	726
0700114-20	FAIRING	726	726
0700114-35	PANEL - BAGGAGE DOOR	726	726
0700114-47	PANEL - LH CENTER	726	726
0700114-48	PANEL - RH CENTER	726	726
0700114-53	TUNNEL	726	726
0700114-54	TUNNEL	726	726
0700114-56	PANEL - FWD RH	726	726
0700114-59	PANEL ASSEMBLY - FWD LH	726	726
0700148-1	HOOD - MAP LIGHT	193	193
0700631-5	FRAME ASSEMBLY - SEAT BOTTOM LH	751	751
0700631-6	FRAME ASSEMBLY - SEAT BOTTOM RH	751	751
0700646-1	SEAT SKIRT	726	726
0700646-2	SEAT SKIRT	726	726
0700646-3	SEAT SKIRT	726	726
0700646-4	SEAT SKIRT	726	726
0710646-1	COVER PLATE	532	532
0710647-1	COVER PLATE	532	532
0710652-1	ESCUTCHEON - GAGE	532	532
0711079-1	PANEL - TRAY ASSEMBLY	726	726
0711133-40	SHIELD ASSEMBLY - RH DOORPOST	726	726
0711133-39	SHIELD ASSEMBLY - LH DOORPOST	726	726
0711133-41	SHIELD ASSEMBLY - LH DOORPOST	726	726
0713025-6	COVER ASSEMBLY - TRIM WHEEL	726	726
0713093-2	COVER - RUDDER TRIM WHEEL	726	726
0713756-1	COVER - UPPER	279	279
0713756-7	COVER ASSEMBLY - LOWER	279	279
0713756-8	COVER ASSEMBLY - LOWER	279	279
0713758-4	DOOR ASSEMBLY - GLOVE BOX	279	279
0713764-12	COVER - RH	279	279
0713764-14	COVER - RH	279	279
0713764-8	COVER - SHOCK	279	279
0713765-1	COVER - RADIO CUTOUT	279	279
0716114-1	COVER ASSEMBLY - FUEL TANK SELECTOR	726	726
0716114-3	COVER ASSEMBLY - FUEL TANK SELECTOR	726	726
1200415-7	ESCUTCHEON - OXYGEN PORT	532	532
1414110-1	TRIM ASSEMBLY - SEAT BACK	726	726
1414110-3	POCKET ASSEMBLY - MAGAZINE	726	726
1414240-3	POWER SEAT BOTTOM ASSEMBLY - PILOT	751	751
1414240-4	POWER SEAT BOTTOM ASSEMBLY - COPILOT	751	751

INTERIOR PAINTED OR PLASTIC PARTS

1967 MODEL YEAR

18051775 THRU 18051875

185-1150 THRU 185-1300

PART NUMBER	PART NAME	INTERIOR COLOR CODE (From Finish and Trim Plate) AF	
0413484-3	SHIELD ASSEMBLY - LH DOORPOST	726	
0413484-5	SHIELD ASSEMBLY - RH DOORPOST	726	
0511482-5	SHIELD - INSTRUMENT LIGHT CONSOLE	532	
0511482-9	COVER ASSEMBLY	532	
0512046-1	SHIELD - CONTROL ASSEMBLY	156	
0513311-1	SUPPORT ASSEMBLY - CONTROL TUBE	156	
0700114-9	LH DOOR PANEL	726	
0700114-10	RH DOOR PANEL	726	
0700114-20	FAIRING	726	
0700114-35	PANEL - BAGGAGE DOOR	726	
0700114-47	PANEL - LH AFT	726	
0700114-48	PANEL - RH AFT	726	
0700114-53	TUNNEL	726	
0700114-54	TUNNEL	726	
0700114-56	PANEL - FWD RH	726	
0700114-59	PANEL ASSEMBLY - FWD LH	726	
0700148-1	HOOD - MAP LIGHT	726	
0700631-5	FRAME ASSEMBLY - SEAT BOTTOM LH	193	
0700631-6	FRAME ASSEMBLY - SEAT BOTTOM RH	751	
0700646-1	SEAT SKIRT	751	
0700646-2	SEAT SKIRT	726	
0710646-1	COVER PLATE LH	726	
0710647-1	COVER PLATE RH	532	
0710652-1	ESCUTCHEON - GAGE	532	
0711079-1	PANEL - TRAY ASSEMBLY	532	
0711133-39	SHIELD - LH DOORPOST	726	
0711133-40	SHIELD - RH DOORPOST	726	
0711133-41	SHIELD - LH DOORPOST	726	
0711702-5	FRAME ASSEMBLY - SEAT BOTTOM LH	726	
0711702-6	FRAME ASSEMBLY - SEAT BOTTOM RH	751	
0711702-20	FRAME ASSEMBLY - SEAT BACK	751	
0713025-6	COVER ASSEMBLY - TRIM WHEEL	751	
0713093-2	COVER - RUDDER TRIM WHEEL	726	
0713764-12	COVER - INSTRUMENT PANEL RH	726	
0713764-13	COVER - SHOCK PANEL	279	
0713764-14	COVER - INSTRUMENT PANEL RH	279	
0713871-1	COVER - RADIO CUTOUT	279	
0713872-1	COVER ASSEMBLY - INSTRUMENT PANEL UPPER	279	
0713872-3	COVER - INSTRUMENT PANEL LOWER	279	
0713872-4	COVER - INSTRUMENT PANEL LOWER	726	
0713875-1	DOOR ASSEMBLY - GLOVE BOX	726	
0716114-1	COVER ASSEMBLY - FUEL TANK SELECTOR	726	
0716114-3	COVER ASSEMBLY - FUEL TANK SELECTOR	726	
1200415-7	ESCUTCHEON - OXYGEN PORT	726	
1414110-1	TRIM - SEAT BACK	532	
1414110-3	POCKET ASSEMBLY - MAGAZINE	726	
		726	

INTERIOR PAINTED OR PLASTIC PARTS
1968 MODEL YEAR
18051876 THRU 18051993
185-1301 THRU 185-1447

PART NUMBER	PART NAME	INTERIOR COLOR CODE (From Finish and Trim Plate) AF	
0413484-3	SHIELD ASSEMBLY - DOORPOST LH	721	
0413484-5	SHIELD ASSEMBLY - DOORPOST RH	721	
0511482-5	SHIELD - INSTRUMENT LIGHT CONSOLE	532	
0511482-9	COVER ASSEMBLY	532	
0513311-1	SUPPORT ASSEMBLY - CONTROL TUBE	156	
0700114-9	DOOR PANEL - LH	721	
0700114-10	DOOR PANEL - RH	721	
0700114-20	FAIRING	721	
0700114-47	PANEL - AFT LH	721	
0700114-48	PANEL - AFT RH	721	
0700114-56	PANEL - FWD RH	721	
0700114-59	PANEL ASSEMBLY - FWD LH	721	
0700114-62	COVER - COWL DECK	825	
0700148-1	HOOD - MAP LIGHT	193	
0700191-1	COVER - TUNNEL	721	
0700191-2	COVER - TUNNEL	721	
0700195-1	COVER - INSTRUMENT PANEL LOWER	721	
0700195-3	COVER - INSTRUMENT PANEL LOWER	721	
0700631-5	FRAME ASSEMBLY - SEAT BOTTOM LH	749	
0700631-6	FRAME ASSEMBLY - SEAT BOTTOM RH	749	
0700646-1	SEAT SKIRT	739	
0700646-2	SEAT SKIRT	721	
0710646-1	COVER PLATE - LH	532	
0710647-1	COVER PLATE - RH	532	
0710652-1	ESCUTCHEON - GAGE	532	
0711079-1	PANEL - TRAY ASSEMBLY	721	
0711133-40	SHIELD - DOORPOST RH	721	
0711702-5	FRAME ASSEMBLY - SEAT BOTTOM LH	749	
0711702-6	FRAME ASSEMBLY - SEAT BOTTOM RH	749	
0711702-20	FRAME ASSEMBLY - SEAT BACK	749	
0713025-6	COVER ASSEMBLY - TRIM WHEEL	721	
0713257-1	COVER - RUDDER TRIM WHEEL	721	
0713764-12	COVER - INSTRUMENT PANEL RH	279	
0713764-14	COVER - INSTRUMENT PANEL RH	279	
0713764-16	COVER - SHOCK PANEL	279	
0713871-1	COVER - RADIO CUTOUT	279	
0713875-3	DOOR ASSEMBLY - GLOVE BOX	721	
0713889-1	RETAINER - EYEBROW	156	
0713907-1	COVER - BRACKET	721	
0715001-1	TRIM - SEAT BACK	721	
0716114-1	COVER ASSEMBLY - FUEL TANK SELECTOR	721	
0716114-3	COVER ASSEMBLY - FUEL TANK SELECTOR	721	
0717000-4	PANEL - BAGGAGE DOOR	721	
0760006-1	SHIELD - CONTROL YOKE	721	
1200415-7	ESCUTCHEON - OXYGEN PORT	532	
1470089-14	MAPLIGHT ASSEMBLY	279	
1715023-3	POCKET ASSEMBLY - MAGAZINE	721	

INTERIOR PAINTED OR PLASTIC PARTS

1969 MODEL YEAR

18051994 THRU 18052103

185-1448 THRU 185-1599

PART NUMBER	PART NAME	INTERIOR COLOR CODE (From Finish and Trim Plate) AF	BF	KF
0413484-3	SHIELD ASSEMBLY - DOORPOST LH	721	721	721
0413484-5	SHIELD ASSEMBLY - DOORPOST RH	721	721	721
0511482-5	SHIELD - INSTRUMENT LIGHT CONSOLE	532	532	532
0511482-9	COVER ASSEMBLY	532	532	532
0513311-1	SUPPORT ASSEMBLY - CONTROL TUBE	156	156	156
0513311-2	SUPPORT ASSEMBLY - CONTROL TUBE	156	156	156
0700114-9	DOOR PANEL - LH	721	721	721
0700114-10	DOOR PANEL - RH	721	721	721
0700114-20	FAIRING	721	721	721
0700114-47	PANEL - AFT LH	721	721	721
0700114-48	PANEL - AFT RH	721	721	721
0700114-56	PANEL - FWD RH	721	721	721
0700114-59	PANEL ASSEMBLY - FWD LH	721	721	721
0700114-62	COVER - COWL DECK	825	825	825
0700148-1	HOOD - MAP LIGHT	193	193	193
0700191-1	COVER - TUNNEL	721	721	721
0700191-2	COVER - TUNNEL	721	721	721
0700191-3	COVER - TUNNEL	721	721	721
0700195-1	COVER - INSTRUMENT PANEL LOWER	721	721	721
0700195-3	COVER - INSTRUMENT PANEL LOWER	721	721	721
0700631-5	FRAME ASSEMBLY - SEAT BOTTOM LH	749	749	749
0700631-6	FRAME ASSEMBLY - SEAT BOTTOM RH	749	749	749
0700646-1	SEAT SKIRT	721	721	721
0700646-2	SEAT SKIRT	721	721	721
0710646-1	COVER PLATE - LH	532	532	532
0710647-1	COVER PLATE - RH	532	532	532
0710652-1	ESCUTCHEON - GAGE	532	532	532
0711079-1	PANEL - TRAY ASSEMBLY	721	721	721
0711079-6	PANEL - TRAY ASSEMBLY	721	721	721
0711133-40	SHIELD - DOORPOST RH	721	721	721
0711702-5	FRAME ASSEMBLY - SEAT BOTTOM LH	749	749	749
0711702-6	FRAME ASSEMBLY - SEAT BOTTOM RH	749	749	749
0711702-20	FRAME ASSEMBLY - SEAT BACK	749	749	749
0713025-6	COVER ASSEMBLY - TRIM WHEEL	721	721	721
0713257-1	COVER - RUDDER TRIM WHEEL	721	721	721
0713764-12	COVER - INSTRUMENT PANEL RH	279	279	279
0713764-14	COVER - INSTRUMENT PANEL RH	279	279	279
0713764-16	COVER - SHOCK PANEL	279	279	279
0713871-1	COVER - RADIO CUTOUT	279	279	279
0713872-9	COVER ASSEMBLY - INSTRUMENT PANEL UPPER	279	279	279
0713875-3	DOOR ASSEMBLY - GLOVE BOX	721	721	721
0713907-1	COVER - BRACKET	721	721	721
0716114-1	COVER ASSEMBLY - FUEL TANK SELECTOR	721	721	721
0716114-3	COVER ASSEMBLY - FUEL TANK SELECTOR	721	721	721
0717000-4	PANEL - BAGGAGE DOOR	721	721	721
0760006-1	SHIELD - CONTROL YOKE	721	721	721
1200415-7	ESCUTCHEON - OXYGEN PORT	532	532	532
1470089-14	MAPLIGHT ASSEMBLY	279	279	279

INTERIOR PAINTED OR PLASTIC PARTS
1970 MODEL YEAR

18052104 THRU 18052175
18501600 THRU 18501832

PART NUMBER	PART NAME	INTERIOR COLOR CODE (From Finish and Trim Plate) AP	BP	MP
0413484-3	SHIELD ASSEMBLY - DOORPOST LH	978	978	978
0413484-5	SHIELD ASSEMBLY - DOORPOST RH	978	978	978
0511130	SHIELD - FRONT SPAR	531	531	531
0511482-5	SHIELD - INSTRUMENT LIGHT CONSOLE	532	532	532
0511482-9	COVER ASSEMBLY	532	532	532
0513311-1	SUPPORT ASSEMBLY - CONTROL TUBE	156	156	156
0513311-2	SUPPORT ASSEMBLY - CONTROL TUBE	156	156	156
0514017-1	TRIM - LH	978	978	978
0514017-2	TRIM - RH	978	978	978
0514017-3	TRIM	978	978	978
0514018-1	TRIM ASSEMBLY - SEAT BACK	978	978	978
0514018-3	POCKET ASSEMBLY - MAGAZINE	978	978	978
0514055-1	TRIM ASSEMBLY - SEAT BACK	978	978	978
0514055-3	POCKET ASSEMBLY - MAGAZINE	978	978	978
0700114-20	FAIRING	978	978	978
0700114-62	COVER - COWL DECK	825	825	825
0700148-1	HOOD - MAP LIGHT	193	193	193
0700191-1	COVER - TUNNEL	978	978	978
0700191-2	COVER - TUNNEL	978	978	978
0700191-3	COVER - TUNNEL	978	978	978
0700195-4	COVER - INSTRUMENT PANEL LOWER	978	978	978
0700195-6	COVER - INSTRUMENT PANEL LOWER	978	978	978
0710646-1	COVER PLATE - LH	532	532	532
0710647-1	COVER PLATE - RH	532	532	532
0710652-1	ESCUTCHEON - GAGE	532	532	532
0711079-1	PANEL - TRAY ASSEMBLY	978	978	978
0711079-6	PANEL - TRAY ASSEMBLY	978	978	978
0711133-40	SHIELD - DOORPOST RH	978	978	978
0711702-5	FRAME ASSEMBLY - SEAT BOTTOM LH	985	985	985
0711702-6	FRAME ASSEMBLY - SEAT BOTTOM RH	985	985	985
0711702-20	FRAME ASSEMBLY - SEAT BACK	985	985	985
0713025-6	COVER ASSEMBLY - TRIM WHEEL	978	978	978
0713257-1	COVER - RUDDER TRIM WHEEL	978	978	978
0713764-12	COVER - INSTRUMENT PANEL RH	279	279	279
0713764-14	COVER - INSTRUMENT PANEL RH	279	279	279
0713764-16	COVER - SHOCK PANEL	279	279	279
0713871-1	COVER - RADIO CUTOUT	279	279	279
0713872-9	COVER ASSEMBLY - INSTRUMENT PANEL UPPER	279	279	279
0713875-3	DOOR ASSEMBLY - GLOVE BOX	978	978	978
0713907-1	COVER - BRACKET	978	978	978
0714010-1	TRIM - LH	978	978	978
0714010-2	TRIM - RH	978	978	978
0715015-9	DOOR PANEL - LH	978	978	978
0715015-10	DOOR PANEL - RH	978	978	978
0715015-11	PANEL - AFT LH	978	978	978
0715015-12	PANEL - AFT RH	978	978	978
0715015-13	PANEL ASSEMBLY - BAGGAGE DOOR	978	978	978

INTERIOR PAINTED OR PLASTIC PARTS

1970 MODEL YEAR

18052104 THRU 18052175
18501600 THRU 18501832

PART NAME	PART NUMBER	INTERIOR COLOR CODE (From Finish and Trim Plate) AP	BP	MP
0716114-1	COVER ASSEMBLY - FUEL TANK SELECTOR	978	978	978
0716114-3	COVER ASSEMBLY - FUEL TANK SELECTOR	978	978	978
0760006-1	SHIELD - CONTROL YOKE	978	978	978
1200415-7	ESCUTCHEON - OXYGEN PORT	532	532	532
1470089-14	MAPLIGHT ASSEMBLY	279	279	279

INTERIOR PAINTED OR PLASTIC PARTS

1971 MODEL YEAR

18052176 THRU 18052284
18501833 THRU 18502090

PART NUMBER	PART NAME	INTERIOR COLOR CODE (From Finish and Trim Plate) AP	BH	BP	DP	MP
0413484-3	SHIELD ASSEMBLY - DOORPOST LH	978	978	978	978	978
0413484-5	SHIELD ASSEMBLY - DOORPOST RH	978	978	978	978	978
0511130	SHIELD - FRONT SPAR	531	531	531	531	531
0511482-5	SHIELD - INSTRUMENT LIGHT CONSOLE	532	532	532	532	532
0511482-9	COVER ASSEMBLY	532	532	532	532	532
0513013-12	BAGGAGE SHELF	978	978	978	978	978
0513311-1	SUPPORT ASSEMBLY - CONTROL TUBE	156	156	156	156	156
0513311-2	SUPPORT ASSEMBLY - CONTROL TUBE	156	156	156	156	156
0513311-7	SUPPORT ASSEMBLY - CONTROL TUBE	156	156	156	156	156
0514017-1	TRIM - LH	978	978	978	978	978
0514017-2	TRIM - RH	978	978	978	978	978
0514017-3	TRIM	978	978	978	978	978
0514018-3	POCKET ASSEMBLY - MAGAZINE	978	978	978	978	978
0514018-15	TRIM ASSEMBLY - SEAT BACK	978	978	978	978	978
0514055-11	TRIM ASSEMBLY - SEAT BACK	978	978	978	978	978
0514055-3	POCKET ASSEMBLY - MAGAZINE	978	978	978	978	978
0700114-20	FAIRING	978	978	978	978	978
0700114-62	COVER - COWL DECK	825	825	825	825	825
0700148-1	HOOD - MAP LIGHT	193	193	193	193	193
0700191-1	COVER - TUNNEL	978	978	978	978	978
0700191-2	COVER - TUNNEL	978	978	978	978	978
0700191-3	COVER - TUNNEL	978	978	978	978	978
0700195-11	COVER - INSTRUMENT PANEL LOWER	978	978	978	978	978
0700195-12	COVER - INSTRUMENT PANEL LOWER	978	978	978	978	978
0700631-5	FRAME ASSEMBLY - SEAT BOTTOM LH	985	985	985	985	985
0700631-6	FRAME ASSEMBLY - SEAT BOTTOM RH	985	985	985	985	985
0700646-1	SKIRT - SEAT BOTTOM LH	978	978	978	978	978
0700646-2	SKIRT - SEAT BOTTOM RH	978	978	978	978	978
0710646-1	COVER PLATE - LH	532	532	532	532	532
0710647-1	COVER PLATE - RH	532	532	532	532	532
0710652-1	ESCUTCHEON - GAGE	532	532	532	532	532
0711079-1	PANEL - TRAY ASSEMBLY	978	978	978	978	978
0711079-6	PANEL - TRAY ASSEMBLY	978	978	978	978	978
0711133-40	SHIELD - DOORPOST RH	978	978	978	978	978
0711702-5	FRAME ASSEMBLY - SEAT BOTTOM LH	985	985	985	985	985
0711702-6	FRAME ASSEMBLY - SEAT BOTTOM RH	985	985	985	985	985
0711702-20	FRAME ASSEMBLY - SEAT BACK	985	985	985	985	985
0713025-6	COVER ASSEMBLY - TRIM WHEEL	978	978	978	978	978
0713257-1	COVER - RUDDER TRIM WHEEL	978	978	978	978	978
0713764-12	COVER - INSTRUMENT PANEL RH	279	279	279	279	279
0713764-14	COVER - INSTRUMENT PANEL RH	279	279	279	279	279
0713764-16	COVER - SHOCK PANEL	279	279	279	279	279
0713764-22	COVER - SHOCK PANEL	279	279	279	279	279
0713764-23	COVER - INSTRUMENT PANEL RH	279	279	279	279	279

INTERIOR PAINTED OR PLASTIC PARTS

1971 MODEL YEAR

18052176 THRU 18052284
18501833 THRU 18502090

PART NUMBER	PART NAME	INTERIOR COLOR CODE (From Finish and Trim Plate) AP	BH	BP	DP	MP
0713871-1	COVER - RADIO CUTOUT	279	279	279	279	279
0713875-3	DOOR ASSEMBLY - GLOVE BOX	978	978	978	978	978
0713907-1	COVER - BRACKET	978	978	978	978	978
0713958-1	COVER - SWITCH PANEL	279	279	279	279	279
0714010-1	TRIM - LH	978	978	978	978	978
0714010-2	TRIM - RH	978	978	978	978	978
0715015-9	DOOR PANEL - LH	978	978	978	978	978
0715015-10	DOOR PANEL - RH	978	978	978	978	978
0715015-11	PANEL - AFT LH	978	978	978	978	978
0715015-12	PANEL - AFT RH	978	978	978	978	978
0715015-14	PANEL ASSEMBLY - BAGGAGE DOOR	978	978	978	978	978
0715020-1	TRIM - SEAT BOTTOM	532	532	532	532	532
0716114-1	COVER ASSEMBLY - FUEL TANK SELECTOR	978	978	978	978	978
0716114-3	COVER ASSEMBLY - FUEL TANK SELECTOR	978	978	978	978	978
0760006-1	SHIELD - CONTROL YOKE	978	978	978	978	978
1200415-7	ESCUTCHEON - OXYGEN PORT	532	532	532	532	532
1470089-14	MAPLIGHT ASSEMBLY	279	279	279	279	279

INTERIOR PAINTED OR PLASTIC PARTS

1973 MODEL YEAR

18052285 THRU 18052384
18502091 THRU 18502310

PART NUMBER	PART NAME	INTERIOR COLOR CODE (From Finish and Trim Plate) AP	BP	DP
0413484-15	SHIELD ASSEMBLY - DOORPOST LH	978	978	978
0413484-16	SHIELD ASSEMBLY - DOORPOST RH	978	978	978
0511130	SHIELD - FRONT SPAR	531	531	531
0511482-5	SHEILD - INSTRUMENT LIGHT CONSOLE	532	532	532
0511482-9	COVER ASSEMBLY	532	532	532
0513013-12	BAGGAGE SHELF	978	978	978
0513311-2	SUPPORT ASSEMBLY - CONTROL TUBE	156	156	156
0513311-7	SUPPORT ASSEMBLY - CONTROL TUBE	156	156	156
0514017-3	TRIM	978	978	978
0514018-3	POCKET ASSEMBLY - MAGAZINE	978	978	978
0514018-15	TRIM ASSEMBLY - SEAT BACK	978	978	978
0514055-11	TRIM ASSEMBLY - SEAT BACK	978	978	978
0514055-3	POCKET ASSEMBLY - MAGAZINE	978	978	978
0700114-20	FAIRING	978	978	978
0700114-62	COVER - COWL DECK	825	825	825
0700148-1	HOOD - MAP LIGHT	193	193	193
0700191-1	COVER - TUNNEL	978	978	978
0700191-2	COVER - TUNNEL	978	978	978
0700191-3	COVER - TUNNEL	978	978	978
0710646-1	COVER PLATE - LH	532	532	532
0710647-1	COVER PLATE - RH	532	532	532
0710652-1	ESCUTCHEON - GAGE	532	532	532
0711079-1	PANEL - TRAY ASSEMBLY	978	978	978
0711079-6	PANEL - TRAY ASSEMBLY	978	978	978
0711133-72	SHIELD - DOORPOST RH	978	978	978
0711702-5	FRAME ASSEMBLY - SEAT BOTTOM LH	985	985	985
0711702-6	FRAME ASSEMBLY - SEAT BOTTOM RH	985	985	985
0711702-20	FRAME ASSEMBLY - SEAT BACK	985	985	985
0713025-6	COVER ASSEMBLY - TRIM WHEEL	978	978	978
0713257-1	COVER - RUDDER TRIM WHEEL	978	978	978
0713871-1	COVER - RADIO CUTOUT	A59	A59	A59
0713875-1	DOOR ASSEMBLY - GLOVE BOX	978	978	978
0713907-1	COVER - BRACKET	279	279	279
0713958-5	COVER - SWITCH PANEL	A59	A59	A59
0713966-1	COVER - INSTRUMENT PANEL LOWER	978	978	978
0713966-2	COVER - INSTRUMENT PANEL LOWER	978	978	978
0713968-1	COVER - SHOCK PANEL	A59	A59	A59
0713968-2	COVER - INSTRUMENT PANEL	A59	A59	A59
0714010-1	TRIM LH	978	978	978
0714010-2	TRIM RH	978	978	978
0715015-9	DOOR PANEL - LH	978	978	978
0715015-10	DOOR PANEL - RH	978	978	978
0715015-11	PANEL - AFT LH	978	978	978

INTERIOR PAINTED OR PLASTIC PARTS

1973 MODEL YEAR

18052285 THRU 18052384
18502091 THRU 18502310

PART NUMBER	PART NAME	INTERIOR COLOR CODE (From Finish and Trim Plate) AP	BP	DP
0715015-12	PANEL - AFT RH	978	978	978
0715015-14	PANEL ASSEMBLY - B AGGAGE DOOR	978	978	978
0716114-1	COVER ASSEMBLY - FUEL TANK SELECTOR	978	978	978
0716114-3	COVER ASSEMBLY - FUEL TANK SELECTOR	978	978	978
0760006-1	SHIELD - CONTROL YOKE	978	978	978
1200415-7	ESCUTCHEON - OXYGEN PORT	532	532	532
1470089-14	MAPLIGHT ASSEMBLY	279	279	279

ALPHABETICAL INDEX

ALPHABETICAL INDEX

NOMENCLATURE	FIGURE
A	
ABRASION BOOT	19
ACCESS DOOR-COWL	73
ACCESS DOOR-COWL	73A
ACCESSORY KITS-SEE ACC KITS CATALOG	
ACCUMULATOR TANK-FUEL	105
ACCUMULATOR TANK-FUEL	103
ACCUMULATOR TANK-FUEL	104
ACTUATOR HINGE-STABILIZER	100
ACTUATOR-POWER SEAT BACK	63A
ACTUATOR-STABILIZER	100
ADAPTER-FUEL TANK DRAIN	13
ADAPTER-OIL FILTER	113
ADAPTER-OIL FILTER	113A
ADAPTER-OIL FILTER	115
ADAPTER-OIL TEMPERATURE	74
ADAPTER-REAR AIR VENT	88A
ADAPTER-REAR AIR VENT	88
ADAPTER-ROTATING BEACON	24
ADJUSTER-SENSITIVITY-TACTAIR	135
AFT SECTION	22
AFT SECTION	23
AFT SECTION-FUSELAGE	35
AFT SECTION-FUSELAGE	35A
AILERON	14
AILERON AMPLIFIER-TACTAIR	135
AILERON BELLCRANK	14
AILERON CARRY THRU TUBE	95
AILERON CHAIN	95
AILERON CHAIN SPROCKET	94
AILERON CONTROL SYSTEM	95
AILERON CONTROL CABLE	95
AILERON HINGE	14
AILERON INTERCONNECT	126A
AILERON PUSH PULL ROD	14
AILERON PUSH-PULL ROD	95
AILERON SERVO	95A
AILERON SERVO-TACTAIR	134
AILERON SERVO-TACTAIR	135
AILERON WEIGHT	14
AILERON-SPAR	14
AIR BOX	76
AIR BOX DRAIN TUBE	76
AIR BOX DRAIN	78
AIR BOX FILTER	73
AIR BOX FILTER	73A
AIR BOX-ENGINE	77
AIR BOX-INDUCTION	78
AIR BOX-INDUCTION	78A
AIR CONTROL-CABIN	67
AIR CONTROL-CABIN	68
AIR CONTROL-CABIN	68A
AIR CONTROL-CABIN	68B
AIR CONTROL-CABIN	68C
AIR CONTROL-INDUCTION	68
AIR CONTROL-INDUCTION	68A
AIR FILTER-CARBURETOR	77B
AIR FILTER-VACUUM	117B
AIR FILTER-VACUUM	117C
AIR FILTER-VACUUM	117E
AIR INLET-ALTERNATE	78
AIR INTAKE HOSE	77
AIR THROTTLE	76A
AIR VALVE-WARM	89
AIR VENT DOOR-SIDE	88
AIR VENT VALVE-REAR CABIN	88
AIR-INDUCTION CONTROL	74
AIRSPEED INDICATOR	102
AIRSPEED INDICATOR	101
A (cont)	
AIRSPEED INDICATOR	67
AIRSPEED INDICATOR	68
AIRSPEED INDICATOR	68A
AIRSPEED INDICATOR	68B
AIRSPEED INDICATOR	68C
AIRSPEED INDICATOR-AMPHIBIAN	128
AIRSPEED INDICATOR-TRUE	68A
AIRSPEED INDICATOR-TRUE	68B
AIRSPEED INDICATOR-TRUE	68C
AIRSPEED INDICATOR-TRUE	101
AIRSPEED INDICATOR-TRUE	102
ALIGHTING GEAR	40
ALIGHTING GEAR-CROSSWIND	40A
ALIGHTING GEAR-CROSSWIND	41
ALIGHTING GEAR-MAIN	41
ALTERNATE STATIC SOURCE INSTL	102A
ALTERNATOR	76A
ALTERNATOR	77B
ALTERNATOR	121
ALTERNATOR	122
ALTERNATOR DRIVE BELT	123B
ALTERNATOR-SHOCK MOUNTED	123B
ALTIMETER	67
ALTIMETER	68
ALTIMETER	68A
ALTIMETER	68B
ALTIMETER	68C
ALTIMETER	101
ALTIMETER	102
ALTITUDE HOLD-TACTAIR	134
AMMETER	67
AMMETER	68
AMMETER	68A
AMMETER	68B
AMMETER	68C
AMPHIBIAN FITTINGS	128
AMPLIFIER-AILERON-TACTAIR	135
AMPLIFIER-ELEVATOR-TACTAIR	134
ANNIVERSARY MODEL MEDALLION	2
ARM-GOVERNOR CONTROL	74
ARM-TAILWHEEL	47
ARMREST	54
ASH RECEIVER	60
ASH RECEIVER	63A
ASH TRAY	57
ASH TRAY	57A
ASH TRAY	58
ASH TRAY-FRONT SEAT	63
ASH TRAY-FRONT SEAT	63C
AUTO PILOT-TACTAIR T-3	134
AUTO PILOT-TACTAIR T-2	135
AUXILIARY FUEL PUMP & STRAINER	108
AUXILIARY FUEL PUMP & STRAINER	103
AUXILIARY FUEL PUMP & STRAINER	105
AUXILIARY FUEL PUMP & STRAINER	104
AUXILIARY FUEL GAGE	67
AUXILIARY FUEL SWITCH	67
AUXILIARY FUEL SWITCH	68
AUXILIARY FUEL SWITCH	68D
AUXILIARY FUEL SWITCH	68E
AUXILIARY FUEL PUMPS & STRAINER	107
AUXILIARY REFUELING EQUIPMENT	70B
AUXILIARY SEAT	66
AXLE BOOT-CROSSWIND GEAR	44
AXLE-CROSSWIND GEAR	40A
AXLE-CROSSWIND GEAR	44
AXLE-MAIN GEAR	41
AXLE-MAIN GEAR	40

ALPHABETICAL INDEX

NOMENCLATURE	FIGURE
A (cont)	
AXLE-SKI	41
AXLE-SKI	40
AXLE-TAILWHEEL	48
AXLE-TAILWHEEL	47
AXLE-TAILWHEEL	48A
AXLE-TAILWHEEL	48B
B	
BACK-FRONT SEAT	59A
BACK-FRONT SEAT	60
BACK-FRONT SEAT	63
BACK-FRONT SEAT	63C
BACK-FRONT SEAT	62
BACK-FRONT SEAT	61
BACK-FRONT SEAT	61A
BACK-REAR SEAT	64
BACK-REAR SEAT	64A
BACK-SEAT	59
BAFFLE-AG CARRYALL COWL FLAP	87A
BAFFLE-CARGO PACK COWL FLAP	129
BAFFLE-ENGINE	77
BAFFLE-OIL COOLER	77
BAFFLES-ENGINE	84
BAFFLES-ENGINE	76
BAFFLES-ENGINE	85
BAFFLES-NON CONGEALING OIL COOLER	77A
BAGGAGE COMPARTMENT SCUFF PLATE	57
BAGGAGE COMPARTMENT SCUFF PLATE	57A
BAGGAGE COMPARTMENT SCUFF PLATE	58
BAGGAGE COMPARTMENT UPHOLSTERY	55
BAGGAGE COMPARTMENT UPHOLSTERY	57
BAGGAGE COMPARTMENT UPHOLSTERY	57A
BAGGAGE COMPARTMENT UPHOLSTERY	58
BAGGAGE DOOR JAMB	24
BAGGAGE DOOR JAMB	25
BAGGAGE DOOR	22
BAGGAGE DOOR	23
BAGGAGE DOOR	52
BAGGAGE DOOR HINGE	52
BAGGAGE DOOR LOCK	52
BAGGAGE DOOR LATCH	52
BAGGAGE DOOR SEAL	52
BAGGAGE DOOR STRIKE PLATE	52
BAGGAGE DOOR HANDLE	58
BAGGAGE DOOR HANDLE	57
BAGGAGE DOOR HANDLE	57A
BAGGAGE SHELF	58
BAGGAGE NET	70
BAGGAGE SHELF	57
BAGGAGE SHELF	57A
BALANCE TUBE COVER	86
BALANCE WEIGHT-PROPELLER	72
BALANCE WEIGHT-PROPELLER	72A
BALLAST-AMPHIBIAN	128
BATTERY	121
BATTERY	122
BATTERY BOX	35
BATTERY BOX	35A
BATTERY BOX	36
BATTERY BOX	37
BATTERY CABLE	121
BATTERY CABLE	122
BEACON ADAPTER-ROTATING	24
BEACON SWITCH-ROTATING	67
BEACON SWITCH-ROTATING	68
B (cont)	
BEACON-FLASHING	124A
BEACON-ROTATING	121
BEACON-ROTATING	122
BEACON-ROTATING	124
BEARING-RUDDER BAR	91
BEARING-RUDDER BAR	92
BELLCRANK-AILERON	14
BELLCRANK-AILERON	95
BELLCRANK-ELEVATOR	96
BELLCRANK-FLAP	15
BELLCRANK-FLAP CONTROL	97
BELLCRANK-FRONT SEAT	63
BELLCRANK-FRONT SEAT	62
BELLCRANK-MIXTURE CONTROL	78
BELLCRANK-PARKING BRAKE	90
BELLCRANK-RUDDER	20
BELLCRANK-RUDDER PEDAL	91
BELLCRANK-RUDDER PEDAL	92
BELLCRANK-TAILWHEEL STEERING	98
BELLCRANK-TAILWHEEL STEERING	99
BELLCRANK-TAILWHEEL	46
BELLCRANK-THROTTLE CONTROL	78
BELLCRANK-THROTTLE CONTROL	78A
BELT-ALTERNATOR DRIVE	76A
BELT-ALTERNATOR DRIVE	77B
BELT-ALTERNATOR DRIVE	123B
BELT-GENERATOR DRIVE	77B
BELT-GENERATOR DRIVE	76A
BELT EXTENSION-STRETCHER	130
BELT-SEAT	59
BELT-SEAT	60
BELT-SEAT	61
BELT-SEAT	61A
BELT-SEAT	63
BELT-SEAT	63C
BELT-SEAT	64
BELT-SEAT	64A
BELT-SEAT	65
BELT-SEAT	65A
BELT-SEAT	66
BEZEL-OXYGEN GAGE	119
BLADE-PROPELLER	72
BLADE-PROPELLER	72A
BLADE-PROPELLER	72B
BLADE-PROPELLER	72C
BLAST TUBE-GENERATOR	76
BLAST TUBE-GENERATOR	77
BLOCK-SPAR BEARING	30
BLOCK-SPAR BEARING	32
BLOCK-SPAR BEARING	32A
BONDING STRAP	76
BONDING STRAP	77
BOOT-ABRASION	19
BOOT-AIR INTAKE EXPANDER	73
BOOT-CROSSWIND AXLE	44
BOX FILTER-AIR	73
BOX FILTER-AIR	73A
BOX-AIR	76
BOX-BATTERY	36
BOX-BATTERY	37
BOX-BATTERY	35
BOX-BATTERY	35A
BOX-GLOVE	67
BOX-GLOVE	68
BOX-GLOVE	68A
BOX-GLOVE	69A
BOX-GLOVE & MAP	69
BOX-MAP	67

ALPHABETICAL INDEX

NOMENCLATURE	FIGURE
B (cont)	
BOX-MAP	68
BOX-MAP	69
BRACKET-FUEL STRAINER	33
BRACKET-COMPASS	31
BRAKE	41
BRAKE	40
BRAKE & RUDDER PEDAL	91
BRAKE & RUDDER PEDAL	92
BRAKE HANDLE-PARKING	90
BRAKE HOSE	90
BRAKE LINE	40
BRAKE LINE	40A
BRAKE LINE	41
BRAKE LINE	90
BRAKE LINING-CROSSWIND GEAR	44
BRAKE LINK-DUAL	91
BRAKE LINK-DUAL	92
BRAKE MASTER CYLINDER	93
BRAKE MASTER CYLINDER PISTON	93
BRAKE MASTER CYLINDER	91
BRAKE MASTER CYLINDER	90
BRAKE MASTER CYLINDER	92
BRAKE SYSTEM	90
BRAKE-CROSSWIND GEAR	42C
BRAKE-CROSSWIND GEAR	44
BRAKE-MAIN WHEEL	42
BRAKE-MAIN WHEEL	42A
BRAKE-MAIN WHEEL	42B
BRAKE-MAIN WHEEL	43
BRAKE-PARKING	90
BREAKER-CIRCUIT	67
BREAKER-CIRCUIT	68
BREAKER-CIRCUIT	68D
BREAKER-CIRCUIT	68E
BREATHER TUBE	76
BREATHER TUBE	77
BULB-CHARGE INDICATOR	67
BULB-CHARGE INDICATOR	68
BULB-CYLINDER HEAD TEMP	76
BULB-DOME LIGHT	123
BULB-INSTRUMENT PANEL LIGHT	123
BULB-LANDING LIGHT	3
BULB-LANDING LIGHT	125C
BULB-NAVIGATION LIGHT	3
BULB-NAVIGATION LIGHT	3A
BULB-MAP LIGHT	123A
BULB-MAP LIGHT	94B
BULKHEAD ASSEMBLY-LANDING GEAR	30
BULKHEAD STA 65.33	32
BULKHEAD STA 65.33	32A
BULKHEAD-SPINNER	71
BUNGEE-RUDDER	98
BUSS BAR	68D
BUSS BAR	68C
C	
CABIN AIR CONTROL	67
CABIN AIR CONTROL	68
CABIN AIR CONTROL	68A
CABIN AIR CONTROL	68B
CABIN AIR CONTROL	68C
CABIN AIR VENT SCOOP	8
CABIN AIR VENT SCOOP	8A
CABIN AIR VENT SCOOP	7
CABIN DOOR FRAME	25
C (cont)	
CABIN DOOR LH	49
CABIN DOOR RH	50
CABIN HEAT CONTROL	67
CABIN HEAT CONTROL	68
CABIN HEAT CONTROL	68A
CABIN HEAT CONTROL	68B
CABIN HEAT CONTROL	68C
CABIN HEAT CONTROL	89
CABIN HEATER DUCT	89
CABIN HEATER-MANIFOLD	89
CABIN LIGHTS	121
CABIN LIGHTS	123
CABIN LIGHTS	122
CABIN STEP	22
CABIN STEP	23
CABIN TOP	24
CABIN TOP	25
CABIN TOP-REAR	26
CABIN VENTILATION SYSTEM	98
CABIN VENTILATION SYSTEM	88A
CABLE DEFLECTOR INSTL	70A
CABLE-AILERON CONTROL	95
CABLE-AILERON INTERCONNECT	126A
CABLE-AILERON SERVO	95A
CABLE-BATTERY	121
CABLE-BATTERY	122
CABLE-CAMERA	132
CABLE-ELEVATOR CONTROL	96
CABLE-FLAP CONTROL	97
CABLE-RUDDER CENTERING	126A
CABLE-RUDDER CONTROL	98
CABLE-RUDDER CONTROL	99
CABLE-STABILIZER TRIM	100
CABLE-TACTAIR	134
CABLE-TACTAIR	135
CABLE-TAILWHEEL	46
CABLE-TAILWHEEL	45
CABLES-CAMERA	131
CAM-DOOR LOCK	49
CAMERA CUT-OUT SEAL	133
CAMERA FLOORBOARD	131
CAMERA FLOORBOARD	132
CAMERA GAS DEFLECTOR	132
CAMERA PROVISIONS-CENTERLINE	131
CAMERA PROVISIONS-OFF CENTER	133
CAMERA PROVISIONS-CENTER-LINE	132
CAMERA SEAT	132
CAMERA WINDOW	131
CAMERA WINDOW	131
CAMERA WINDOW	133
CAMERA WINDOW	132
CAP-AIR OUTLET	88
CAP-AIR OUTLET	88A
CAP-FUEL	13
CAP-GAS	13
CAP-HUB	41
CARBURETOR	77B
CARBURETOR AIR FILTER	77B
CARBURETOR AIR TEMP. GAGE	67
CARBURETOR AIR TEMP. GAGE	68A
CARBURETOR AIR TEMP. GAGE	68B
CARBURETOR AIR TEMP. GAGE	68C
CARBURETOR AIR TEMP. PROBE	77
CARBURETOR AIR INTAKE DUCT	73
CARBURETOR AIR INTAKE DUCT	73A
CARBURETOR HEAT CONTROL	67
CARBURETOR HEAT CONTROL	68A
CARBURETOR HEAT CONTROL	68B

ALPHABETICAL INDEX

NOMENCLATURE	FIGURE
C (cont)	
CARBURETOR HEAT CONTROL	68C
CARBURETOR HEAT CONTROL	75
CARBURETOR HEAT HOSE	77
CARD COVER-CORRECTION	67
CARD COVER-CORRECTION	68
CARD COVER-CORRECTION	68A
CARD COVER-CORRECTION	68B
CARD-CORRECTION	67
CARD-CORRECTION	68
CARD-CORRECTION	68A
CARD-CORRECTION	68B
CARD-CORRECTION RETAINER	67
CARD-CORRECTION RETAINER	68
CARD-CORRECTION RETAINER	68A
CARD-CORRECTION RETAINER	68B
CARGO PACK	129
CARGO PACK DOOR	129
CARPET	56
CASE-GLOVE & MAP	69
CASE-MAP	67
CASE-MAP	68
CASE-OXYGEN MASK	119
CASTING-TAILGEAR MOUNTING	38
CATALOG-HOW TO USE	PAGE I
CATCH-GLOVEBOX MAGNETIC	69A
CENTER STOWABLE SEAT	65
CENTER-LINE CAMERA PROVISIONS	131
CENTER-LINE CAMERA PROVISIONS	132
CHAIN-AILERON	95
CHAIN-STABILIZER TRIM	100
CHARGE INDICATOR LIGHT	67
CHARGE INDICATOR LIGHT	68
CHECK VALVE	108
CHECK VALVE	107
CHILD SEAT	65B
CIGAR LIGHTER	67
CIGAR LIGHTER	68
CIGAR LIGHTER	68A
CIGAR LIGHTER	68B
CIGAR LIGHTER	68C
CIRCUIT BREAKER	67
CIRCUIT BREAKER	68
CIRCUIT BREAKER	68D
CIRCUIT BREAKER	68E
CIRCUIT BREAKER	113
CIRCUIT BREAKER	114
CLOCK	67
CLOCK	68
CLOCK	68A
CLOCK	68B
CLOCK	68C
CLUTCH ASSEMBLY-DOOR LATCH	32A
CLUSTER-INSTRUMENT	68A
CLUSTER-INSTRUMENT	68B
CLUSTER-INSTRUMENT	68C
COAT HANGER HOOK	53
COLLAR-CONTROL TUBE	67
COLLAR-CONTROL TUBE	68
COLLECTOR-EXHAUST STACKS	83
COMMAND CONTROL-TACTAIR	134
COMPASS	70
COMPASS BRACKET	31
CONTACTOR-MASTER SOLENOID	121
CONTACTOR-MASTER SOLENOID	122
CONTINENTAL ENGINE	76
CONTINENTAL ENGINE	77
CONTROL ARM-GOVERNOR	74
CONTROL BELLCRANK-FLAP	97
C (cont)	
CONTROL BELLCRANK-THROTTLE	78
CONTROL BELLCRANK-MIXTURE	78
CONTROL CABLE-AILERON	95
CONTROL CABLE-ELEVATOR	96
CONTROL CABLE-FLAP	97
CONTROL CABLE-RUDDER	98
CONTROL CABLE-RUDDER	99
CONTROL CABLE-STABILIZER TRIM	100
CONTROL LEVER-COWL FLAP	87
CONTROL LOCK	70
CONTROL SYSTEM-RUDDER	98
CONTROL SYSTEM-AILERON	95
CONTROL SYSTEM-COWL FLAP	87
CONTROL SYSTEM-ELEVATOR	96
CONTROL SYSTEM-FLAP	97
CONTROL SYSTEM-RUDDER	99
CONTROL SYSTEM-STABILIZER TRIM	100
CONTROL TEE	94
CONTROL TEE SHIELD	56
CONTROL TUBE COLLAR	68
CONTROL TUBE SOCKET	68
CONTROL TUBE SUPPORT	68A
CONTROL TUBE SUPPORT	68B
CONTROL TUBE SUPPORT	68C
CONTROL TUBE-CONTROL TEE	94
CONTROL UNIT-TACTAIR	135
CONTROL WHEEL	94
CONTROL WHEEL	94A
CONTROL WHEEL	94B
CONTROL WHEEL & SWITCHES INSTL	94B
CONTROL WHEEL EMBLEM	94
CONTROL WHEEL EMBLEM	2
CONTROL WHEEL EMBLEM	2A
CONTROL WHEEL MAP LIGHT	94B
CONTROL YOKE	94A
CONTROL YOKE SHIELD	56
CONTROL-CABIN AIR	67
CONTROL-CABIN AIR	68
CONTROL-CABIN AIR	68A
CONTROL-CABIN AIR	68B
CONTROL-CABIN AIR	68C
CONTROL-CABIN HEAT	67
CONTROL-CABIN HEAT	68
CONTROL-CABIN HEAT	68A
CONTROL-CABIN HEAT	68B
CONTROL-CABIN HEAT	68C
CONTROL-CABIN HEAT	89
CONTROL-CARBURETOR HEAT	67
CONTROL-CARBURETOR HEAT	68A
CONTROL-CARBURETOR HEAT	68B
CONTROL-CARBURETOR HEAT	68C
CONTROL-CARBURETOR HEAT	75
CONTROL-FUEL SHUT OFF	68A
CONTROL-FUEL SHUT OFF	68B
CONTROL-FUEL VALVE	105
CONTROL-FUEL VALVE	104
CONTROL-INDUCTION AIR	68
CONTROL-INDUCTION AIR	68A
CONTROL-INDUCTION AIR	74
CONTROL-MIXTURE	67
CONTROL-MIXTURE	68
CONTROL-MIXTURE	68A
CONTROL-MIXTURE	68B
CONTROL-MIXTURE	68C
CONTROL-MIXTURE	74
CONTROL-MIXTURE	75
CONTROL-PROPELLER	74
CONTROL-PROPELLER	75

ALPHABETICAL INDEX

NOMENCLATURE	FIGURE
C (cont)	
CONTROL-PROPELLER PITCH	67
CONTROL-PROPELLER PITCH	68
CONTROL-PROPELLER PITCH	68A
CONTROL-PROPELLER PITCH	68B
CONTROL-PROPELLER PITCH	68C
CONTROL-STRAINER DRAIN	67
CONTROL-STRAINER DRAIN	68
CONTROL-STRAINER DRAIN	68A
CONTROL-STRAINER DRAIN	74
CONTROL-STRAINER DRAIN	75
CONTROL-STRAINER DRAIN	109
CONTROL-STRAINER DRAIN	110
CONTROL-TACTAIR COMMAND	134
CONTROL-THROTTLE	67
CONTROL-THROTTLE	68
CONTROL-THROTTLE	68A
CONTROL-THROTTLE	68B
CONTROL-THROTTLE	68C
CONTROL-THROTTLE	74
CONTROL-THROTTLE	75
COOLER-ENGINE OIL	76
COOLER-ENGINE OIL	76A
COOLER-ENGINE OIL	77B
COOLER-LARGE OIL	77
COOLER-NON CONGEALING	77A
CORRECTION CARD	67
CORRECTION CARD	68
CORRECTION CARD	68A
CORRECTION CARD	68B
CORRECTION CARD RETAINER	67
CORRECTION CARD RETAINER	68
CORRECTION CARD RETAINER	68A
CORRECTION CARD RETAINER	68B
COURTESY LIGHTS	123
COVER-BALANCE TUBE	86
COVER-CORRECTION CARD	67
COVER-CORRECTION CARD	68
COVER-CORRECTION CARD	68A
COVER-CORRECTION CARD	68B
COVER-COWL DECK	53
COVER-COWL OPENING	86
COVER-FLOOR	55
COVER-FUEL TANK SELECTOR	105
COVER-INSTRUMENT PANEL	67
COVER-RADIO	68A
COVER-RADIO	68B
COVER-RADIO	68C
COVER-RUDDER TRIM WHEEL	56
COVER-RUDDER TRIM WHEEL	98
COVER-RUDDER TRIM WHEEL	99A
COVER-SHOCK PANEL	67
COVER-SHOCK PANEL	68
COVER-SHOCK PANEL	68A
COVER-SHOCK PANEL	68B
COVER-SHOCK PANEL	68C
COVER-STABILIZER TRIM WHEEL	100
COVER-STATIONARY PANEL	68
COVER-STATIONARY PANEL	68A
COVER-STATIONARY PANEL	68B
COVER-STATIONARY PANEL	68C
COVER-TUNNEL	55
COVER-TUNNEL AFT	28
COVER-TUNNEL AFT	29
COWL ACCESS DOOR	73
COWL ACCESS DOOR	73A
COWL DECK COVER	53
COWL DOOR-OIL	73
COWL DOOR-OIL	73A
C (cont)	
COWL FLAP	73
COWL FLAP	73A
COWL FLAP CONTROL LEVER	97
COWL FLAP CONTROL SYSTEM	87
COWL FLAP EXTENSION-AG CARRYALL	87A
COWL FLAP EXTENSIONS-CARGO PACK	129
COWL NOSE CAP	73
COWL NOSE CAP	73A
COWL OPENING COVER	86
COWL-ENGINE	73
COWL-ENGINE	73A
CROSSWIND AXLE & HUB	44
CROSSWIND BRAKE LINING	44
CROSSWIND GEAR	41
CROSSWIND GEAR	40A
CROSSWIND GEAR WHEEL & BRAKE	44
CROSSWIND GEAR WHEEL & BRAKE	42C
CUP-FUEL SAMPLER	13A
CUTTER-WIRE	70A
CYLINDER HEAD TEMP. BULB	76
CYLINDER HEAD TEMP. GAGE	67
CYLINDER HEAD TEMP. GAGE	68
CYLINDER HEAD TEMP. GAGE	68A
CYLINDER HEAD TEMP. GAGE	68B
CYLINDER HEAD TEMP. GAGE	68C
CYLINDER-BRAKE MASTER	93
CYLINDER-BRAKE MASTER	91
CYLINDER-BRAKE MASTER	90
CYLINDER-BRAKE MASTER	92
CYLINDER-OXYGEN	119
CYLINDER-OXYGEN	120
CYLINDER-OXYGEN	120A
CYLINDER-OXYGEN	120B
CYLINDER-OXYGEN	120C
CYLINDER-PROPELLER	72
CYLINDER-PROPELLER	72A
D	
DECALS & PLACARDS	2
DECK COVER-COWL	53
DEFLECTOR-EXHAUST HEAT	76
DEFLECTOR-EXHAUST HEAT	77
DEFLECTOR-GAS-CAMERA	131
DEFLECTOR-GAS-CAMERA	132
DEFROST OUTLET	89
DEFROST VALVE GUIDE	89
DEFROST VALVE	89
DETECTOR-NAVIGATION LIGHT FLASHER	122
DETECTOR-NAVIGATION LIGHT	3
DETECTOR-NAVIGATION LIGHT	3A
DILUTION SWITCH-OIL	113
DILUTION SWITCH-OIL	67
DILUTION SWITCH-OIL	68
DILUTION SWITCH-OIL	68D
DILUTION SWITCH-OIL	68E
DILUTION-OIL	114
DIP STICK-ENGINE OIL	76
DIRECTIONAL GYRO	67
DIRECTIONAL GYRO	68
DIRECTIONAL GYRO	68A
DIRECTIONAL GYRO	68B
DIRECTIONAL GYRO	68C
DIRECTIONAL GYRO	116
DIRECTIONAL GYRO	117
DIRECTIONAL GYRO	117A

ALPHABETICAL INDEX

NOMENCLATURE	FIGURE
D(cont)	
DIRECTIONAL GYRO	117B
DIRECTIONAL GYRO	117C
DIRECTIONAL GYRO	117E
DIRECTIONAL GYRO	134
DIRECTIONAL GYRO	135
DISCHARGE HOSE	117
DISCHARGE HOSE	117A
DISCHARGER-STATIC	14
DISCHARGER-STATIC	20
DISCHARGER-STATIC	21
DISENGAGING RUDDER PEDALS	92
DISTRIBUTOR-FUEL	118
DIVIDED MIDDLE SEAT ASSEMBLY	65A
DOME LIGHT	123
DOME-FLASHING BEACON	124A
DOME-ROTATING BEACON	124
DOME-SPINNER	71
DOOR FRAME	24
DOOR FRAME-CABIN	25
DOOR HANDLE	49
DOOR HANDLE	50
DOOR HANDLE	50
DOOR HANDLE ESCUTCHEON	49
DOOR HANDLE ESCUTCHEON	50
DOOR HANDLE-BAGGAGE	58
DOOR HANDLE-BAGGAGE	57
DOOR HANDLE-BAGGAGE	57A
DOOR HINGE-BAGGAGE	52
DOOR HINGE-CABIN	49
DOOR HINGE-CABIN	50
DOOR JAMB-BAGGAGE	24
DOOR JAMB-LITTER	358
DOOR LATCH-LITTER	358
DOOR JAMB-BAGGAGE	25
DOOR LATCH HANDLE	51
DOOR LATCH HANDLE	51A
DOOR LATCH STRIKE PLATE	32
DOOR LATCH STOP	51
DOOR LATCH-BAGGAGE	52
DOOR LATCH-CABIN	49
DOOR LATCH-CABIN	50
DOOR LATCH CLUTCH ASSEMBLY	32A
DOOR LOCK-BAGGAGE	52
DOOR LOCK CAM	49
DOOR PULL	54
DOOR SEAL	49
DOOR SEAL	50
DOOR SEAL-BAGGAGE	52
DOOR SEAL-LITTER	358
DOOR SILL	24
DOOR SOUNDPROOFING	54
DOOR STOP	49
DOOR STOP-CABIN	50
DOOR STRUCTURE-RH CABIN	50
DOOR UPHOLSTERY	54
DOOR WINDLACE-CABIN	58
DOOR WINDLACE-CABIN	57
DOOR WINDLACE-CABIN	57A
DOOR WINDOW-CABIN	49
DOOR WINDOW-CABIN	50
DOOR-BAGGAGE	22
DOOR-BAGGAGE	23
DOOR-BAGGAGE	52
DOOR-CABIN LH	49
DOOR-CABIN RH	50
DOOR-CARGO PACK	129
DOOR-COLD AIR	28
DOOR-COLD AIR	29
D(cont)	
DOOR-COWL	73
DOOR-COWL	73A
DOOR-GLOVE BOX	69
DOOR-GLOVE BOX	69A
DOOR-GROUND SERVICE PLUG	125
DOOR-GROUND SERVICE PLUG	125A
DOOR-LITTER	358
DOOR-MAP CASE	69
DOOR-SIDE AIR VENT	88
DOOR-SIDE AIR VENT	88A
DOORPOST-FRONT	30
DORSAL	18
DORSAL	17
DORSAL FITTING	35
DORSAL FITTING	35A
DORSAL RIB	19
DORSAL RIB	17
DRAIN ADAPTER-FUEL TANK	13
DRAIN CONTROL-FUEL STRAINER	109
DRAIN CONTROL-FUEL STRAINER	110
DRAIN CONTROL-STRAINER	67
DRAIN CONTROL-STRAINER	68
DRAIN CONTROL-STRAINER	68A
DRAIN CONTROL-STRAINER	74
DRAIN CONTROL-STRAINER	75
DRAIN INSTALLATION-OIL SUMP	76
DRAIN LINE-ENGINE PUMP	76
DRAIN TUBE-AIR BOX	76
DRAIN TUBE-FLOATPLANE	126
DRAIN VALVE	109
DRAIN VALVE-FUEL	105
DRAIN VALVE-FUEL	104
DRAIN VALVE-FUEL	110
DRAIN VALVE-FUEL TANK	13A
DRAIN VALVE-QUICK OIL	77
DRAIN-AIR BOX	78
DRAIN-FUEL	109
DRAIN-FUEL STRAINER	110
DRAIN-FUEL VALVE	103
DRIVE BELT-ALTERNATOR	76A
DRIVE BELT-ALTERNATOR	77B
DRIVE BELT-ALTERNATOR	123A
DRIVE BELT-GENERATOR	76A
DRIVE BELT-GENERATOR	77B
DUAL BRAKE LINK	91
DUAL BRAKE LINK	92
DUAL BRAKES	91
DUAL BRAKES	92
DUAL CONTROL-RUDDER PEDAL	91
DUAL CONTROL-RUDDER PEDAL	92
DUCT-CABIN HEATER	89
DUCT-CARBURETOR AIR INTAKE	73
DUCT-CARBURETOR AIR INTAKE	73A
DUST COVER-OXYGEN OUTLET	119
E	
ELECTRICAL EQUIPMENT	121
ELECTRICAL EQUIPMENT	122
ELEMENT-OIL FILTER	113
ELEMENT-OIL FILTER	115
ELEMENT-VACUUM AIR FILTER	117B
ELEMENT-VACUUM AIR FILTER	117C
ELEMENT-VACUUM AIR FILTER	117E
ELEVATOR	21
ELEVATOR AMPLIFIER-TACTAIR	134

ALPHABETICAL INDEX

NOMENCLATURE	FIGURE
E (cont)	
ELEVATOR BALANCE WEIGHT	21
ELEVATOR BELLCRANK	96
ELEVATOR CONTROL SYSTEM	96
ELEVATOR CONTROL CABLE	96
ELEVATOR HINGE	21
ELEVATOR PYLON	21
ELEVATOR SERVO-TACTAIR	134
ELEVATOR SPAR	21
ELEVATOR STOP-AFT	38
ELEVATOR STOP-FWD	30
ELEVATOR TIP	21
EMBLEM-CONTROL WHEEL	94
EMBLEM-CONTROL WHEEL	2
EMBLEM-CONTROL WHEEL	2A
EMBLEM-CONTROL WHEEL	2B
EMBLEM-CONTROL WHEEL	2C
EMBLEMS	2
EMBLEMS	2A
EMPENNAGE FAIRING	19
ENGINE	74
ENGINE	75
ENGINE AIR BOX	77
ENGINE BAFFLES	84
ENGINE BAFFLE	77
ENGINE BAFFLES	85
ENGINE BAFFLES	76
ENGINE COMPONENTS & ACCESSORIES	76A
ENGINE COMPONENTS & ACCESSORIES	77A
ENGINE COWL	73
ENGINE COWL	73A
ENGINE EXHAUST STACKS	83
ENGINE EXHAUST STACKS	82
ENGINE MOUNT	76
ENGINE MOUNT	77
ENGINE MOUNT LUG	76
ENGINE MOUNT-FLOATPLANE	126
ENGINE MOUNT-FLOATPLANE	127
ENGINE MUFFLER	83
ENGINE OIL COOLER	76
ENGINE OIL DIP STICK	76
ENGINE PRIMER	67
ENGINE PRIMER	68A
ENGINE PRIMER	68B
ENGINE PRIMER	68C
ENGINE PRIMER	109
ENGINE SHOCK MOUNT	76
ENGINE SHOCK MOUNT	77
ENGINE-CONTINENTAL	76
ENGINE-CONTINENTAL	77
ESCUTCHEON-DOOR HANDLE	49
ESCUTCHEON-DOOR HANDLE	50
EXHAUST HEAT DEFLECTOR	76
EXHAUST HEAT DEFLECTOR	77
EXHAUST MUFFLER	82
EXHAUST PIPE	82
EXHAUST STACKS	76
EXHAUST STACKS	77
EXHAUST STACKS-ENGINE	82
EXHAUST STACKS-ENGINE	83
EXPANDER-AIR INTAKE	73
EXPANDER-TIRE	70
EXTENDED RANGE STRUCTURE-WING	6
EXTENDED RANGE STRUCTURE-WING	6A
EXTERNAL POWER RECEPTACLE	121
EXTERNAL POWER RECEPTACLE	122
EXTERNAL POWER RECEPTACLE	125
EXTERNAL POWER RECEPTACLE	125A
EXTINGUISHER-FIRE	70
E (cont)	
EYEBOLT-HOISTING	70
EYEBROW-INSTRUMENT PANEL	68A
EYEBROW-INSTRUMENT PANEL	68B
EYEBROW-INSTRUMENT PANEL	68C
F	
FAIRING-EMPENNAGE	19
FAIRING-WING	3
FAIRING-WING	3A
FAIRING-WING	5
FAIRING-WING	6
FAIRING-WING	6A
FAIRING-WING STRUT	16
FILLER VALVE-OXYGEN	120
FILLET-WING	22
FILTER ADAPTER-OIL	113
FILTER ADAPTER-OIL	113A
FILTER ADAPTER-OIL	115
FILTER ELEMENT-OIL	113
FILTER ELEMENT-OIL	113A
FILTER ELEMENT-OIL	115
FILTER ELEMENT-VACUUM AIR	117B
FILTER ELEMENT-VACUUM AIR	117C
FILTER-AIR BOX	73
FILTER-AIR BOX	73A
FILTER-CARBURETOR AIR	77B
FILTER-FUEL PUMP	107
FILTER-FUEL STRAINER	110A
FILTER-FULL FLOW OIL	113
FILTER-FULL FLOW OIL	113A
FILTER-FULL FLOW OIL	115
FILTER-OIL	114
FILTER-VACUUM AIR	117B
FILTER-VACUUM AIR	117C
FIN & DORSAL	13
FIN & DORSAL	17
FIN SPAR	18
FIN SPAR	17
FIN-VENTRAL	126A
FIRE EXTINGUISHER	70
FIREWALL	33
FIREWALL	28
FIREWALL	27
FIREWALL GROMMETS	33
FIREWALL GROMMETS	34
FIREWALL GROMMETS	34A
FIREWALL UPHOLSTERY	53
FITTING-DORSAL	35
FITTING-WING STRUT	16
FLAP BELLCRANK	15
FLAP CONTROL BELLCRANK	97
FLAP CONTROL CABLE	97
FLAP CONTROL SYSETM	97
FLAP CONTROL SYSTEM-COWL	87
FLAP EXTENSIONS-AG CARPYALL	87A
FLAP EXTENSIONS-CARGO PACK COWL	129
FLAP HINGE-COWL	73
FLAP HINGE-COWL	73A
FLAP LEVER	97
FLAP LEVER LATCH	97
FLAP LEVER RATCHET	97
FLAP PUSH-PULL ROD	15
FLAP ROLLER	15
FLAP-COWL	73
FLAP-COWL	73A

ALPHABETICAL INDEX

NOMENCLATURE	FIGURE
F (cont)	
FLAP-WING	15
FLASHER-BEACON LIGHT	124A
FLASHER-NAVIGATION LIGHTS	122
FLASHING BEACON	124A
FLOAT-FUEL TRANSMITTER	13
FLOATPLANE COMPONENTS	126A
FLOATPLANE ENGINE MOUNT	126
FLOATPLANE FITTINGS	126
FLOATPLANE FITTINGS	127
FLOOR COVER	55
FLOORBOARD	24
FLOORBOARD	23
FLOORBOARD-AFT SECTION	35A
FLOORBOARD-CAMERA	131
FLOORBOARD-CAMERA	132
FLOORBOARD-FLOATPLANE	125
FLOORBOARD-FRONT SECTION	28
FLOORBOARD-FRONT SECTION	27
FLOORBOARD-FRONT SECTION	29
FLOORBOARD-LANDING GEAR SUPPORT	30
FLUSH VALVE	13
FORK-TAILWHEEL	46
FORK-TAILWHEEL	48
FORK-TAILWHEEL	47
FORK-TAILWHEEL	48A
FORK-TAILWHEEL	48B
FRAME-ADJUSTABLE FRONT SEAT	62
FRAME-CABIN DOOR	25
FRAME-DIVIDED MIDDLE SEAT	65A
FRAME-DOOR	24
FRAME-DOOR WINDOW	50
FRAME-FRONT SEAT	63
FRAME-WINDOW	49
FRONT & CENTER SECTION	24
FRONT & CENTER SECTION	22
FRONT & CENTER SECTION	23
FRONT & CENTER SECTION	25
FRONT SEAT	59
FRONT SEAT	59A
FRONT SEAT	60
FRONT SEAT	61
FRONT SEAT	61A
FRONT SEAT	63C
FRONT SEAT BACK	59A
FRONT SEAT BACK	61
FRONT SEAT BACK	61A
FRONT SEAT BACK	63C
FRONT SEAT BELLCRANK	63
FRONT SEAT BELLCRANK	62
FRONT SEAT FRAME	63
FRONT SEAT FRAME-ADJUSTABLE	62
FRONT SEAT ROLLER	63
FRONT SEAT-ADJUSTABLE	62
FRONT SEAT-INFINITE ADJUST	63C
FRONT SEAT-RECLINING	59A
FRONT SEAT-VERTICALLY ADJUSTABLE	63
FRONT SECTION FLOORBOARD	28
FRONT SECTION FLOORBOARD	27
FRONT SECTION FLOORBOARD	29
FRONT SECTION STRUCTURE	24
FRONT SECTION STRUCTURE	25
FRONT SECTION STRUCTURE	28
FUEL ACCUMULATOR TANK	103
FUEL ACCUMULATOR TANK	104
FUEL CAP	13
FUEL DISTRIBUTOR	118
FUEL DRAIN	109
FUEL DRAIN VALVE	103
FUEL DRAIN VALVE	110
FUEL FLOW GAGE	68
FUEL FLOW GAGE	68A
FUEL FLOW GAGE	68B
FUEL FLOW GAGE	68C
FUEL FLOW LINE	74
FUEL GAGE	57
FUEL GAGE	58
FUEL GAGE	68A
FUEL GAGE	68B
FUEL GAGE	68C
FUEL GAGE-AUXILIARY	67
FUEL HOSE	109
FUEL JET	118
FUEL LINE	108
FUEL LINE	103
FUEL LINE	105
FUEL LINE	104
FUEL LINE	109
FUEL LINE	107
FUEL METERING UNIT	76A
FUEL PRESSURE HOSE	76
FUEL PRESSURE HOSE	74
FUEL PRIMER SYSTEM	118
FUEL PRIMER SYSTEM	118A
FUEL PUMP	76A
FUEL PUMP & STRAINER-AUXILIARY	103
FUEL PUMP & STRAINER-AUXILIARY	105
FUEL PUMP & STRAINER-AUXILIARY	104
FUEL PUMP FILTER	107
FUEL PUMP SWITCH	68A
FUEL PUMP SWITCH	68D
FUEL PUMP SWITCH	68E
FUEL PUMP RESISTOR	108
FUEL PUMP RESISTOR	121
FUEL PUMP-AUXILIARY	109
FUEL PUMP-AUXILIARY	107
FUEL SAMPLER CUP	13A
FUEL SELECTOR VALVE	105
FUEL SELECTOR VALVE	112
FUEL SELECTOR VALVE HANDLE	105
FUEL SELECTOR VALVE HANDLE	106
FUEL STRAINER	107
FUEL STRAINER	103
FUEL STRAINER	109
FUEL STRAINER	110A
FUEL STRAINER & DRAIN	109
FUEL STRAINER & DRAIN	110
FUEL STRAINER & DRAIN	110A
FUEL STRAINER BRACKET	33
FUEL STRAINER FILTER	110A
FUEL SWITCH-AUXILIARY	67
FUEL SWITCH-AUXILIARY	68
FUEL SYSTEM	103
FUEL SYSTEM	104
FUEL SYSTEM	109
FUEL SYSTEM-SELECTABLE TANK	105
FUEL TANK	13
FUEL TANK DRAIN VALVE	13A
FUEL TANK SELECTOR COVER	105
FUEL TANK SELECTOR VALVE	105
FUEL TANK STRAINER	13
FUEL TRANSMITTER	13
FUEL VALVE	103
FUEL VALVE	105
FUEL VALVE	111
FUEL VALVE CONTROL	105
FUEL VALVE CONTROL	104

ALPHABETICAL INDEX

NOMENCLATURE	FIGURE
F (cont)	
FUEL VALVE HANDLE	103
FUEL VALVE HANDLE	105
FUEL VALVE-DRAIN	105
FUEL VALVE-DRAIN	104
FUEL VENT LINE	109
FUEL VENT VALVE	13
FULL FLOW OIL FILTER	115
FULL FLOW OIL FILTER	113
FUSE HOLDER	121
FUSELAGE AFT SECTION	35
FUSELAGE AFT SECTION	35A
FUSELAGE EQUIPMENT	70
FUSELAGE EQUIPMENT	70A
FUSELAGE EQUIPMENT	70B
FUSELAGE TAILCONE	38
FUSELAGE TAILCONE	35
FUSELAGE TAILCONE	35A
FUSELAGE-180	23
FUSELAGE-185	22
G	
GAGE-AUXILIARY FUEL	67
GAGE-CARBURETOR AIR TEMP	67
GAGE-CARBURETOR AIR TEMP	68A
GAGE-CARBURETOR AIR TEMP	68B
GAGE-CARBURETOR AIR TEMP	68C
GAGE-CARBURETOR AIR TEMP	77
GAGE-CYLINDER HEAD TEMPERATURE	67
GAGE-CYLINDER HEAD TEMP	68
GAGE-CYLINDER HEAD TEMPERATURE	68A
GAGE-CYLINDER HEAD TEMPERATURE	68B
GAGE-CYLINDER HEAD TEMPERATURE	68C
GAGE-FUEL	67
GAGE-FUEL	68
GAGE-FUEL	68A
GAGE-FUEL	68B
GAGE-FUEL	68C
GAGE-FUEL FLOW	68
GAGE-FUEL FLOW	68A
GAGE-FUEL FLOW	68B
GAGE-FUEL FLOW	68C
GAGE-MANIFOLD PRESSURE	67
GAGE-MANIFOLD PRESSURE	68
GAGE-MANIFOLD PRESSURE	68A
GAGE-MANIFOLD PRESSURE	68B
GAGE-MANIFOLD PRESSURE	68C
GAGE-OIL PRESSURE	67
GAGE-OIL PRESSURE	68
GAGE-OIL PRESSURE	68A
GAGE-OIL PRESSURE	68B
GAGE-OIL PRESSURE	68C
GAGE-OIL PRESSURE	113
GAGE-OIL PRESSURE	114
GAGE-OIL TEMPERATURE	67
GAGE-OIL TEMPERATURE	68
GAGE-OIL TEMPERATURE	68A
GAGE-OIL TEMPERATURE	68B
GAGE-OIL TEMPERATURE	68C
GAGE-OIL TEMPERATURE	113
GAGE-OIL TEMPERATURE	114
GAGE-OUTSIDE AIR TEMP	70
GAGE-OXYGEN PRESSURE	119
GAGE-OXYGEN PRESSURE	120A
GAGE-OXYGEN PRESSURE	120B
GAGE-OXYGEN PRESSURE	120C
G (cont)	
GAGE-SUCTION	67
GAGE-SUCTION	68
GAGE-SUCTION	68A
GAGE-SUCTION	68B
GAGE-SUCTION	68C
GAGE-SUCTION	95B
GAGE-SUCTION	116
GAGE-SUCTION	117
GAGE-SUCTION	117A
GAGE-SUCTION	117B
GAGE-SUCTION	117C
GAGE-SUCTION	117E
GAGE-SUCTION	134
GAGE-SUCTION	135
GAS CAP	13
GAS DEFLECTOR-CAMERA	131
GAS DEFLECTOR-CAMERA	132
GAS TANK	13
GEAR-CROSSWIND	40A
GEAR-MAIN LANDING	41
GEAR-MAIN LANDING	40
GEAR-TAIL	45
GEAR-TAIL	46
GEAR-TAIL	46A
GENERATOR BLAST TUBE	76
GENERATOR BLAST TUBE	77
GENERATOR DRIVE BELT	76A
GENERATOR DRIVE BELT	77B
GENERATOR-50 AMP	76A
GENERATOR-50 AMP	77B
GENERATOR-50 AMP	121
GENERATOR-50 AMP	122
GLASS-DOOR	50
GLASS-WINDOW	49
GLOVE BOX	67
GLOVE BOX	68
GLOVE BOX	68A
GLOVE BOX	68B
GLOVE BOX	68C
GLOVE BOX	68A
GLOVE BOX & MAP CASE	69
GLOVE BOX DOOR	69
GLOVE BOX DOOR	69A
GOVERNOR CONTROL ARM	74
GOVERNOR-PROPELLER	76
GOVERNOR-PROPELLER	77
GOVERNOR-PROPELLER	79
GOVERNOR-PROPELLER	79A
GOVERNOR-PROPELLER	81A
GOVERNOR-PROPELLER	81C
GOVERNOR-PROPELLER	81D
GOVERNOR-PROPELLER-GARWIN	81
GOVERNOR-PROPELLER-GARWIN	81B
GOVERNOR-PROPELLER-HOOF	80
GROMMETS-FIREWALL	34
GROMMETS-FIREWALL	34A
GROUND SERVICE PLUG	121
GROUND SERVICE PLUG	122
GROUND SERVICE PLUG	125
GROUND SERVICE PLUG	125A
GROUND SERVICE PLUG	125B
GROUND STRAP	75
GROUND STRAP-EXTERNAL POWER	125
GROUND STRAP-EXTERNAL POWER	125A
GROUND STRAP-EXTERNAL POWER	125B
GROUND STRAP-FUEL TANK	13
GYRO-DIRECTIONAL	67
GYRO-DIRECTIONAL	68

ALPHABETICAL INDEX

NOMENCLATURE	FIGURE
G (cont)	
GYRO-DIRECTIONAL	68A
GYRO-DIRECTIONAL	68B
GYRO-DIRECTIONAL	68C
GYRO-DIRECTIONAL	116
GYRO-DIRECTIONAL	117
GYRO-DIRECTIONAL	117A
GYRO-DIRECTIONAL	117B
GYRO-DIRECTIONAL	117C
GYRO-DIRECTIONAL	117E
GYRO-DIRECTIONAL	134
GYRO-DIRECTIONAL	135
GYRO-HORIZON	67
GYRO-HORIZON	68
GYRO-HORIZON	68A
GYRO-HORIZON	68B
GYRO-HORIZON	68C
GYRO-HORIZON	116
GYRO-HORIZON	117
GYRO-HORIZON	117A
GYRO-HORIZON	117B
GYRO-HORIZON	117C
GYRO-HORIZON	117E
GYRO-HORIZON	134
GYRO-HORIZON	135
H	
HANDLE ESCUTCHEON-DOOR	50
HANDLE-AUXILIARY REFUELING	70B
HANDLE-BAGGAGE DOOR PULL	58
HANDLE-BAGGAGE DOOR PULL	57
HANDLE-BAGGAGE DOOR PULL	57A
HANDLE-DOOR	49
HANDLE-DOOR	50
HANDLE-DOOR	50
HANDLE-DOOR LATCH	51
HANDLE-FRONT SEAT ADJUSTMENT	63
HANDLE-FRONT SEAT ADJUSTMENT	63C
HANDLE-FUEL SELECTOR VALVE	109
HANDLE-FUEL VALVE	103
HANDLE-FUEL VALVE	105
HANDLE-PARKING BRAKE	90
HANDLE-SEAT	59A
HANDLE-SEAT ADJUSTMENT	61
HANDLE-SEAT ADJUSTMENT	61A
HANDLE-SEAT ADJUSTMENT	62
HANGER HOOK-COAT	53
HARNESS HOOK-SHOULDER	70
HARNESS-IGNITION	76A
HARNESS-IGNITION	77B
HARNESS-SHOULDER	70
HEAD TEMPERATURE GAGE-CYLINDER	67
HEAD TEMPERATURE GAGE-CYLINDER	68
HEAD TEMPERATURE GAGE-CYLINDER	68A
HEAD TEMPERATURE GAGE-CYLINDER	68B
HEAD TEMPERATURE GAGE-CYLINDER	68C
HEADLINER	53
HEADLINER WIRE	53
HEADREST	60
HEADREST	63
HEADREST	63C
HEADREST	62
HEADREST	64
HEADREST	64A
HEADREST	61
HEADREST	61A
H (cont)	
HEADREST	59
HEAT CONTROL-CABIN	67
HEAT CONTROL-CABIN	68
HEAT CONTROL-CABIN	68A
HEAT CONTROL-CABIN	68B
HEAT CONTROL-CABIN	68C
HEAT CONTROL-CABIN	89
HEAT CONTROL-CARBURETOR	67
HEAT CONTROL-CARBURETOR	68A
HEAT CONTROL-CARBURETOR	68B
HEAT CONTROL-CARBURETOR	68C
HEAT CONTROL-CARBURETOR	75
HEAT DEFLECTOR-EXHAUST	76
HEAT DEFLECTOR-EXHAUST	77
HEAT SWITCH-PITOT	67
HEAT SWITCH-PITOT	68
HEAT SWITCH-PITOT	68D
HEAT SWITCH-PITOT	68E
HEATED PITOT TUBE	101
HEATER DUCT-CABIN	39
HEATER-CABIN MANIFOLD	89
HEATER-PITOT	102
HEATER-PITOT	101
HINGE WINDOW	49
HINGE-AILERON	14
HINGE-AUXILIARY SEAT	66
HINGE-BAGGAGE DOOR	52
HINGE-CABIN DOOR	49
HINGE-CABIN DOOR	50
HINGE-CARGO PACK DOOR	129
HINGE-COWL DOOR	73
HINGE-COWL DOOR	73A
HINGE-COWL FLAP	73
HINGE-COWL FLAP	73A
HINGE-ELEVATOR	21
HINGE-GLOVE BOX	69
HINGE-MAP CASE	69
HINGE-REAR SEAT BOTTOM	65
HINGE-STABILIZER	19
HINGE-STABILIZER ACTUATOR	130
HOISTING EYEBOLT	70
HOOK-COAT HANGER	53
HOOK-SHOULDER HARNESS	70
HORIZON GYRO	67
HORIZON GYRO	68
HORIZON GYRO	68B
HORIZON GYRO	68C
HORIZON GYRO	116
HORIZON GYRO	117
HORIZON GYRO	117A
HORIZON GYRO	117C
HORIZON GYRO	117E
HORIZON GYRO	134
HORIZON GYRO	135
HORN-STALL WARNING	68A
HORN-STALL WARNING	69
HORN-STALL WARNING	102B
HOSE-AIR INTAKE	77
HOSE-BRAKE	90
HOSE-CARBURETOR HEAT	77
HOSE-DISCHARGE	117
HOSE-DISCHARGE	117A
HOSE-FUEL	109
HOSE-FUEL PRESSURE	76
HOSE-FUEL PRESSURE	74
HOSE-OIL DILUTION	114
HOSE-OIL FILTER	114
HOSE-OIL PRESSURE	113

ALPHABETICAL INDEX

NOMENCLATURE	FIGURE
H (cont)	
HOSE-OIL PRESSURE	76
HOSE-OIL PRESSURE	77
HOSE-OIL RETURN	116
HOSE-OIL RETURN	117
HOSE-SUCTION	116
HOSE-SUCTION	117
HOSE-SUCTION	117A
HOSE-SUCTION	136
HOSE-TACTAIR	134
HOSE-TACTAIR	135
HOSE-VENT	117
HOSE-VENT	117A
HOURMETER	68B
HOURMETER	68C
HOW TO ORDER INT PARTS	PAGE XII
HOW TO ORDER UPHL PARTS	PAGE XIII
HOW TO USE CATALOG	PAGE I
HUB & AXLE-CROSSWIND GEAR	44
HUB CAP	40
HUB CAP	40A
HUB CAP	41
HUB CAP	42B
HUB-DUAL BRAKES	91
HUB-DUAL BRAKES	92
HUB-PROPELLER	72
HUB-PROPELLER	72A
HUB-PROPELLER	72B
HUB-PROPELLER	72C
HUB-TAILWHEEL	47
I	
IGNITION HARNESS	76A
IGNITION HARNESS	77B
IGNITION SWITCH	68
IGNITION SWITCH	68A
IGNITION SWITCH	68D
IGNITION SWITCH	68E
INDEX-NUMERICAL	PAGE 341
INDICATOR LIGHT-CHARGE	67
INDICATOR LIGHT-CHARGE	68
INDICATOR-AIRSPEED	67
INDICATOR-AIRSPEED	68
INDICATOR-AIRSPEED	68A
INDICATOR-AIRSPEED	68B
INDICATOR-AIRSPEED	68C
INDICATOR-AIRSPEED	101
INDICATOR-AIRSPEED	102
INDICATOR-AIRSPEED-AMPHIBIAN	128
INDICATOR-DIRECTIONAL GYRO	67
INDICATOR-DIRECTIONAL GYRO	68
INDICATOR-DIRECTIONAL GYRO	68A
INDICATOR-DIRECTIONAL GYRO	68B
INDICATOR-DIRECTIONAL GYRO	68C
INDICATOR-DIRECTIONAL GYRO	116
INDICATOR-DIRECTIONAL GYRO	117
INDICATOR-DIRECTIONAL GYRO	117A
INDICATOR-DIRECTIONAL GYRO	117B
INDICATOR-DIRECTIONAL GYRO	117C
INDICATOR-DIRECTIONAL GYRO	134
INDICATOR-DIRECTIONAL GYRO	135
INDICATOR-HORIZONTAL GYRO	67
INDICATOR-HORIZONTAL GYRO	68
INDICATOR-HORIZONTAL GYRO	68A
INDICATOR-HORIZONTAL GYRO	68B
INDICATOR-HORIZONTAL GYRO	68C
I (cont)	
INDICATOR-HORIZONTAL GYRO	116
INDICATOR-HORIZONTAL GYRO	117
INDICATOR-HORIZONTAL GYRO	117A
INDICATOR-HORIZONTAL GYRO	117B
INDICATOR-HORIZONTAL GYRO	117C
INDICATOR-HORIZONTAL GYRO	117E
INDICATOR-HORIZONTAL GYRO	134
INDICATOR-HORIZONTAL GYRO	135
INDICATOR-POWER ECONOMY	68
INDICATOR-POWER ECONOMY	68A
INDICATOR-POWER ECONOMY	68B
INDICATOR-POWER ECONOMY	68C
INDICATOR-TRIM CONTROL	100
INDICATOR-TRUE AIRSPEED	68A
INDICATOR-TRUE AIRSPEED	68B
INDICATOR-TRUE AIRSPEED	68C
INDICATOR-TRUE AIRSPEED	101
INDICATOR-TRUE AIRSPEED	102
INDICATOR-TURN & BANK	67
INDICATOR-TURN & BANK	68
INDICATOR-TURN & BANK	68A
INDICATOR-TURN & BANK	68B
INDICATOR-TURN & BANK	68C
INDICATOR-TURN COORDINATOR	68B
INDICATOR-TURN COORDINATOR	68C
INDICATOR-TURN COORDINATOR	96B
INDICATOR-VERTICAL SPEED	67
INDICATOR-VERTICAL SPEED	68
INDICATOR-VERTICAL SPEED	68A
INDICATOR-VERTICAL SPEED	68B
INDICATOR-VERTICAL SPEED	68C
INDICATOR-VERTICAL SPEED	101
INDICATOR-VERTICAL SPEED	102
INDUCTION AIR CONTROL	68
INDUCTION AIR CONTROL	68A
INDUCTION AIR CONTROL	74
INDUCTION AIR BOX	78
INFINITELY ADJUSTABLE FRONT SEAT	63C
INITALS-SKYWAGON	2
INLET-ALTERNATE AIR	78
INSTRUMENT CLUSTER	63A
INSTRUMENT CLUSTER	68B
INSTRUMENT CLUSTER	68C
INSTRUMENT PANEL EQUIPMENT	67
INSTRUMENT PANEL EQUIPMENT	68
INSTRUMENT PANEL EQUIPMENT	68A
INSTRUMENT PANEL EQUIPMENT	68B
INSTRUMENT PANEL EQUIPMENT	68C
INSTRUMENT PANEL LIGHT	123
INSTRUMENT PANEL LIGHT-POST	68C
INSTRUMENT PANEL-SHOCK MOUNTED	67
INSTRUMENT PANEL-SHOCK MOUNTED	68
INSTRUMENT PANEL-SHOCK MOUNTED	68A
INSTRUMENT PANEL-SHOCK MOUNTED	68B
INSTRUMENT PANEL-SHOCK MOUNTED	68C
INSTRUMENT PANEL-STATIONARY	28
INSTRUMENT PANEL-STATIONARY	29
INSTRUMENT PANEL-STATIONARY	68
INSTRUMENT PANEL-STATIONARY	68A
INSTRUMENT PANEL-STATIONARY	68B
INSTRUMENT PANEL-STATIONARY	68C
INTAKE HOSE-AIR	77
J	
JACK POINT	70

ALPHABETICAL INDEX

NOMENCLATURE	FIGURE
J (cont)	
JACK-MICROPHONE	67
JACK-MICROPHONE	68
JAMB-BAGGAGE DOOR	24
JAMB-BAGGAGE DOOR	25
JAMB-LITTER DOOR	358
JET-FUEL	118
JOINT-UNIVERSAL	94
K	
KICK PLATE	56
KICK PLATE	55
KIT-SEAT ROLLER	60
KIT-SEAT ROLLER	61
KIT-SEAT ROLLER	61A
KIT-SEAT ROLLER	63
KIT-SEAT ROLLER	63C
KNOB-SEAT ADJUSTMENT	60
KNOB-SEAT ADJUSTMENT	59
KNOB-SEAT HANDLE	61
KNOB-SEAT HANDLE	61A
KITS-SEE ACCESSORY KITS CATALOG	
KNOBS	67
KNOBS	68
KNOBS	68A
KNOBS	68B
KNOBS	68C
KNOBS	68D
KNOBS	68E
L	
LANDING GEAR-CROSSWIND	40A
LANDING GEAR-CROSSWIND	41
LANDING GEAR-MAIN	40
LANDING GEAR-MAIN	41
LANDING GEAR SPRING-CROSSWIND	40A
LANDING GEAR SPRING-MAIN	40
LANDING GEAR TIRE	43
LANDING GEAR TUBE	43
LANDING GEAR WHEEL & BRAKE	43
LANDING GEAR WHEEL & BRAKE	42
LANDING GEAR WHEEL & BRAKE	42A
LANDING GEAR WHEEL & BRAKE	42B
LANDING GEAR WHEEL & BRAKE	42C
LANDING LIGHT INSTL-WING	3
LANDING LIGHT INSTL-COWL	125C
LANDING LIGHT SWITCH	67
LANDING LIGHT SWITCH	68
LANDING LIGHT SWITCH	68D
LANDING LIGHT SWITCH	68E
LATCH STOP-DOOR	51
LATCH-BAGGAGE DOOR	52
LATCH-CABIN DOOR	49
LATCH-CABIN DOOR	50
LATCH-CABIN DOOR	51
LATCH-CABIN DOOR	51A
LATCH-FLAP LEVER	97
LATCH-LITTER DOOR	358
LATCH-REAR SEAT	64
LATCH-REAR SEAT	64A
LATCH-REAR SEAT BACK	66
LEAD-CYLINDER HEAD TEMP. GAGE	67
LEAD-CYLINDER HEAD TEMP. GAGE	68
L (cont)	
LEAD-CYLINDER HEAD TEMP. GAGE	68A
LEAD-CYLINDER HEAD TEMP. GAGE	68B
LEAD-CYLINDER HEAD TEMP. GAGE	68C
LEAD-THERMOCOUPLE-POWER ECONOMY	68A
LEAD-THERMOCOUPLE-POWER ECONOMY	68B
LEAD-THERMOCOUPLE-POWER ECONOMY	68C
LEADING EDGE-WING	7
LEADING EDGE-WING	9
LEADING EDGE-WING	3A
LENS-DOME LIGHT	123
LENS-NAVIGATION LIGHT	3
LENS-NAVIGATION LIGHT	3A
LENS-TAIL LIGHT	39
LETTERING-GLOVE BOX	69
LETTERING-SKYWAGON	2
LEVELER INSTALLATION-WING	95A
LEVER LATCH-FLAP	97
LEVER RATCHET-FLAP	97
LEVER-COWL FLAP CONTROL	97
LEVER-FLAP	97
LIGHT RHEOSTAT	68
LIGHT SWITCH-MAP	123A
LIGHT SWITCH-LANDING	67
LIGHT SWITCH-LANDING	68
LIGHT SWITCH-LANDING	68D
LIGHT SWITCH-LANDING	68E
LIGHT-CHARGE INDICATOR	67
LIGHT-CHARGE INDICATOR	68
LIGHT-CONTROL WHEEL MAP	348
LIGHT-DOME	123
LIGHT-FLASHING BEACON	124A
LIGHT-INSTRUMENT PANEL	123
LIGHT-LANDING	3
LIGHT-LANDING	125C
LIGHT-NAVIGATION	3
LIGHT-NAVIGATION	3A
LIGHT-MAP	123A
LIGHT-OVERVOLTAGE	68B
LIGHT-OVERVOLTAGE	68C
LIGHT-POST	68C
LIGHT-SPOT	123A
LIGHT-STROBE	3
LIGHT-STROBE	3A
LIGHT-TAIL	39
LIGHTER KNOB	67
LIGHTER KNOB	68
LIGHTER KNOB	68A
LIGHTER KNOB	68B
LIGHTER KNOB	68C
LIGHTER-CIGAR	67
LIGHTER-CIGAR	68
LIGHTER-CIGAR	68A
LIGHTER-CIGAR	68B
LIGHTER-CIGAR	68C
LIGHTS RHEOSTAT	67
LIGHTS SWITCH-NAVIGATION	67
LIGHTS SWITCH-NAVIGATION	68
LIGHTS SWITCH-NAVIGATION	68D
LIGHTS SWITCH-NAVIGATION	68E
LIGHTS-CABIN	123
LIGHTS-CABIN	122
LIGHTS-COURTESY	123
LIMITATIONS PLACARD-OPERATIONAL	2
LIMITATIONS PLACARD-OPERATIONAL	2A
LIMITATIONS PLACARD-OPERATIONAL	2B
LIMITATIONS PLACARD-OPERATIONAL	2C
LIMITATIONS PLACARD-OPERATIONAL	58
LINE-BRAKE	41

ALPHABETICAL INDEX

NOMENCLATURE	FIGURE
L (cont)	
LINE-BRAKE	90
LINE-ENGINE PUMP DRAIN	76
LINE-FUEL	108
LINE-FUEL	103
LINE-FUEL	105
LINE-FUEL	104
LINE-FUEL	109
LINE-FUEL	107
LINE-FUEL FLOW	74
LINE-FUEL VENT	109
LINE-MANIFOLD PRESSURE	75
LINE-OIL	116
LINE-OIL	117
LINE-OIL	117A
LINE-OIL PRESSURE	114
LINE-OIL PRESSURE	113
LINE-OIL PRESSURE	74
LINE-OXYGEN	119
LINE-OXYGEN	120
LINE-OXYGEN	120A
LINE-OXYGEN	120B
LINE-OXYGEN	120C
LINE-PITOT	102
LINE-PITOT	101
LINE-PRIMER	118
LINE-PRIMER	75
LINE-PRIMER	77
LINE-VENT	116
LINE-VENT	136
LINK-DUAL BRAKES	91
LINK-DUAL BRAKES	92
LITTER DOOR INSTALLATION	35B
LITTER DOOR ASSEMBLY	35B
LITTER DOOR LATCH	35B
LOCK-BAGGAGE DOOR	52
LOCK-CARGO PACK DOOR	129
LOCK-CONTROL	70
LOCK-IGNITION	68
LOCK-IGNITION	68D
LOCK-IGNITION	68E
LOCK-TAILWHEEL	46B
LUG-ENGINE MOUNT	76
M	
M.A.A-NAMEPLATE	22
MAGNETIC CATCH-GLOVE BOX	69A
MAGNETO	76A
MAGNETO	77B
MAIN GEAR WHEEL & BRAKE	42
MAIN GEAR WHEEL & BRAKE	42A
MAIN GEAR WHEEL & BRAKE	42B
MAIN GEAR WHEEL & BRAKE-CROSSWIND	42C
MAIN LANDING GEAR	41
MAIN LANDING GEAR	40
MAIN LANDING GEAR-CROSSWIND	40A
MANIFOLD HEATER-CABIN	89
MANIFOLD PRESSURE GAGE	67
MANIFOLD PRESSURE GAGE	68
MANIFOLD PRESSURE GAGE	68A
MANIFOLD PRESSURE GAGE	68B
MANIFOLD PRESSURE GAGE	68C
MANIFOLD PRESSURE LINE	75
MANIFOLD-OXYGEN	119
MAP CASE	67
MAP CASE	68
M (cont)	
MAP CASE	69
MAP CASE DOOR	69
MAP LIGHT	123A
MAP LIGHT SWITCH	123A
MAP LIGHT-CONTROL WHEEL	94B
MASK CASE-OXYGEN	119
MASK-OXYGEN	119
MASK-OXYGEN	120
MASK-OXYGEN	120A
MASK-OXYGEN	120B
MASK-OXYGEN	120C
MASTER CYLINDER-BRAKE	90
MASTER CYLINDER-BRAKE	91
MASTER CYLINDER-BRAKE	92
MASTER CYLINDER-BRAKE	93
MASTER SWITCH	67
MASTER SWITCH	68
MASTER SWITCH	68D
MASTER SWITCH	68E
MEDALLION-ANNIVERSARY MODEL	2
METERING UNIT-FUEL	76A
MICROPHONE JACK	67
MICROPHONE JACK	68
MICROPHONE SWITCH	94B
MIDDLE SEAT-DIVIDED	65A
MIXTURE CONTROL	67
MIXTURE CONTROL	68
MIXTURE CONTROL	68A
MIXTURE CONTROL	68B
MIXTURE CONTROL	68C
MIXTURE CONTROL	74
MIXTURE CONTROL	75
MIXTURE CONTROL BELLCRANK	78
MOTOR-POWER SEAT	63B
MOTOR-ROTATING BEACON	124
MOUNT LUG-ENGINE	76
MOUNT-COWL FLAP CONTROL	87
MOUNT-ENGINE	76
MOUNT-ENGINE	77
MOUNT-ENGINE SHOCK	76
MOUNT-ENGINE SHOCK	77
MOUNT-ENGINE-FLOATPLANE	126
MOUNT-ENGINE-FLOATPLANE	127
MOUNT-ENGINE-AMPHIBIAN	128
MOUNT-SHOCK	67
MOUNT-SHOCK	68
MOUNT-SHOCK	68A
MOUNT-SHOCK	68B
MOUNT-SHOCK	68C
MOUNTING BASE-TACTAIR	135
MUFFLER SHROUD	83
MUFFLER SHROUD	82
MUFFLER-ENGINE	83
MUFFLER-ENGINE	82
N	
NAMEPLATE-M.A.A	22
NAVIGATION LIGHT FLASHER	122
NAVIGATION LIGHT	3
NAVIGATION LIGHT	3A
NAVIGATION LIGHT DETECTOR	3
NAVIGATION LIGHT DETECTOR	3A
NAVIGATION LIGHTS SWITCH	67
NAVIGATION LIGHTS SWITCH	68
NAVIGATION LIGHTS SWITCH	68D

ALPHABETICAL INDEX

NOMENCLATURE	FIGURE
N (cont)	
NAVIGATION LIGHTS SWITCH	68E
NET-BAGGAGE	70
NOSE CAP-COWL	73
NOSE CAP-COWL	73A
NUMERICAL INDEX	PAGE 341
O	
OFF CENTER CAMERA PROVISIONS	133
OIL COOLER BAFFLE	77
OIL COOLER BAFFLE-NON CONGEALING	77A
OIL COOLER-ENGINE	76
OIL COOLER-ENGINE	76A
OIL COOLER-ENGINE	77B
OIL COOLER-LARGE	77
OIL COOLER-NON CONGEALING	77A
OIL DILUTION	114
OIL DILUTION SWITCH	67
OIL DILUTION SWITCH	68
OIL DILUTION SWITCH	68D
OIL DILUTION SWITCH	68F
OIL DILUTION SWITCH	113
OIL DILUTION SWITCH	114
OIL DILUTION SYSTEM	113
OIL DIP STICK	76
OIL DOOR-COWL	73
OIL FILTER	114
OIL FILTER ELEMENT	113
OIL FILTER ELEMENT	113A
OIL FILTER HOSE	114
OIL FILTER-FULL FLOW	113
OIL FILTER-FULL FLOW	113A
OIL FILTER-FULL FLOW	115
OIL PRESSURE GAGE	67
OIL PRESSURE GAGE	68
OIL PRESSURE GAGE	68A
OIL PRESSURE GAGE	68B
OIL PRESSURE GAGE	68C
OIL PRESSURE GAGE	113
OIL PRESSURE GAGE	114
OIL PRESSURE HOSE	76
OIL PRESSURE HOSE	77
OIL PRESSURE LINE	74
OIL PRESSURE LINE	113
OIL PRESSURE LINE	114
OIL RETURN HOSE	116
OIL RETURN HOSE	117
OIL RETURN HOSE	117A
OIL SEPARATOR	116
OIL SEPARATOR	117
OIL SEPARATOR	117A
OIL SEPARATOR	117D
OIL SEPARATOR	136
OIL SUMP DRAIN INSTALLATION	76
OIL SYSTEM	114
OIL SYSTEM	113
OIL TEMPERATURE ADAPTER	74
OIL TEMPERATURE GAGE	67
OIL TEMPERATURE GAGE	68
OIL TEMPERATURE GAGE	68A
OIL TEMPERATURE GAGE	68B
OIL TEMPERATURE GAGE	68C
OIL TEMPERATURE GAGE	113
OIL TEMPERATURE GAGE	114
OIL VALVE-QUICK DRAIN	77
OPERATIONAL LIMITATIONS PLACARD	2
O (cont)	
OPERATIONAL LIMITATIONS PLACARD	2A
OPERATIONAL LIMITATIONS PLACARD	2B
OPERATIONAL LIMITATIONS PLACARD	2C
OPERATIONAL LIMITATIONS PLACARD	5B
OUTLET-DEFROST	99
OUTSIDE AIR TEMP. GAGE	70
OVERVOLTAGE LIGHT	68B
OVERVOLTAGE LIGHT	68C
OVERVOLTAGE SENSOR	68B
OVERVOLTAGE SENSOR	68C
OXYGEN CONTROL PANEL	120A
OXYGEN CONTROL PANEL	120B
OXYGEN CONTROL PANEL	120C
OXYGEN CYLINDER	119
OXYGEN CYLINDER	120
OXYGEN CYLINDER	120A
OXYGEN CYLINDER	120B
OXYGEN CYLINDER	120C
OXYGEN FILLER VALVE	120
OXYGEN LINE	119
OXYGEN LINE	120
OXYGEN LINE	120A
OXYGEN LINE	120B
OXYGEN LINE	120C
OXYGEN MANIFOLD	119
OXYGEN MASK	119
OXYGEN MASK	120
OXYGEN MASK	120A
OXYGEN MASK	120B
OXYGEN MASK	120C
OXYGEN MASK CASE	119
OXYGEN PRESSURE GAGE	119
OXYGEN PRESSURE GAGE	120A
OXYGEN PRESSURE GAGE	120B
OXYGEN PRESSURE GAGE	120C
OXYGEN REGULATOR	119
OXYGEN REGUALTOR	120A
OXYGEN REGUALTOR	120B
OXYGEN REGUALTOR	120C
OXYGEN SYSTEM	119
OXYGEN SYSTEM	120
OXYGEN SYSTEM	120A
OXYGEN SYSTEM	120B
OXYGEN SYSTEM	120C
OXYGEN VALVE	119
OXYGEN VALVE	120
OXYGEN VALVE	120A
OXYGEN VALVE	120B
OXYGEN VALVE	120C
P	
PAD-ENGINE MOUNT	75
PAINT CHART	PAGE 111
PANEL COVER-SHOCK	67
PANEL COVER-SHOCK	68
PANEL COVER-SHOCK	68A
PANEL COVER-SHOCK	68B
PANEL COVER-SHOCK	68C
PANEL EQUIPMENT-INSTRUMENT	67
PANEL EQUIPMENT-INSTRUMENT	68
PANEL EQUIPMENT-INSTRUMENT	68A
PANEL EQUIPMENT-INSTRUMENT	68B
PANEL EQUIPMENT-INSTRUMENT	68C
PANEL-SHOCK MOUNTED INSTRUMENT	68
PANEL-SHOCK MOUNTED INSTRUMENT	68A

ALPHABETICAL INDEX

NOMENCLATURE	FIGURE
P (cont)	
PANEL-SHOCK MOUNTED INSTRUMENT	68B
PANEL-SHOCK MOUNTED INSTRUMENT	68C
PANEL-STATIONARY INSTRUMENT	28
PANEL-STATIONARY INSTRUMENT	29
PANEL-STATIONARY INSTRUMENT	67
PANEL-STATIONARY INSTRUMENT	68
PANEL-STATIONARY INSTRUMENT	68A
PANEL-STATIONARY INSTRUMENT	68B
PANEL-STATIONARY INSTRUMENT	68C
PARKING BRAKE	90
PARKING BRAKE BELLCRANK	90
PARKING BRAKE HANDLE	90
PARKING BRAKE SPRING	90
PAWL-TAILWHEEL	48
PAWL-TAILWHEEL	47
PAWL-TAILWHEEL	48A
PAWL-TAILWHEEL	48B
PEDAL CONTROL BELLCRANK	91
PEDAL CONTROL BELLCRANK	92
PEDAL DUAL CONTROL-RUDDER	91
PEDAL DUAL CONTROL	92
PEDAL RETURN SPRING	91
PEDAL-BRAKE & RUDDER	91
PEDAL-BRAKE & RUDDER	92
PIPE-EXHAUST	82
PISTON-MASTER CYLINDER	93
PISTON-PROPELLER	72
PISTON-PROPELLER	72A
PISTON-PROPELLER	72B
PISTON-PROPELLER	72C
PITCH CONTROL-PROPELLER	67
PITOT HEAT SWITCH	67
PITOT HEAT SWITCH	68
PITOT HEAT SWITCH	68D
PITOT HEAT SWITCH	68E
PITOT HEAT SWITCH	101
PITOT HEATER	102
PITOT HEATER	101
PITOT LINE	102
PITOT LINE	101
PITOT STATIC SOURCE SUMP	102
PITOT SYSTEM	102
PITOT SYSTEM	101
PITOT TUBE	102
PITOT TUBE	101
PITOT TUBE	4
PITOT TUBE-HEATED	102
PITOT TUBE-HEATED	101
PLACARD-FUEL SELECT	56
PLACARD-OPERATIONAL LIMITATIONS	2
PLACARD-OPERATIONAL LIMITATIONS	2A
PLACARD-OPERATIONAL LIMITATIONS	2B
PLACARD-OPERATIONAL LIMITATIONS	2C
PLACARD-OPERATIONAL LIMITATIONS	58
PLACARD & NAMEPLATES	2
PLACARD & NAMEPLATES	2A
PLACARD & NAMEPLATES	2B
PLACARD & NAMEPLATES	2C
PLATE-REGISTRATION NUMBER	67
PLATE-REGISTRATION NUMBER	68
PLUG-SPARK	76A
PLUG-SPARK	77B
POINT-JACK	70
POINTER-STABILIZER TRIM	100
POSITIONING RACK-PARKING BRAKE	90
POST LIGHT-INSTRUMENT	68C
POWER ECONOMY INDICATOR	68
POWER ECONOMY INDICATOR	68A
P (cont)	
POWER ECONOMY INDICATOR	68B
POWER ECONOMY INDICATOR	68C
POWER ECONOMY-INDICATOR PROBE	74
POWER ECONOMY-INDICATOR PROBE	75
POWER SEAT	63A
POWER SEAT BOTTOM	63B
POWER SEAT SWITCH	63A
POWER SEAT MOTOR	63B
POWER SUPPLY-STROBE LIGHT	3
POWER SUPPLY-STROBE LIGHT	3A
PRESSURE GAGE-MANIFOLD	68
PRESSURE GAGE-MANIFOLD	68A
PRESSURE GAGE-MANIFOLD	68B
PRESSURE GAGE-MANIFOLD	68C
PRESSURE GAGE-OIL	67
PRESSURE GAGE-OIL	68
PRESSURE GAGE-OIL	68A
PRESSURE GAGE-OIL	68B
PRESSURE GAGE-OIL	68C
PRESSURE GAGE-OIL	113
PRESSURE GAGE-OIL	114
PRESSURE GAGE-OXYGEN	119
PRESSURE GAGE-OXYGEN	120A
PRESSURE GAGE-OXYGEN	120B
PRESSURE GAGE-OXYGEN	120C
PRESSURE HOSE-FUEL	76
PRESSURE HOSE-OIL	76
PRESSURE HOSE-OIL	77
PRESSURE LINE-OIL	114
PRESSURE LINE-OIL	113
PRIMER LINE	77
PRIMER LINE	106
PRIMER SYSTEM-FUEL	119
PRIMER SYSTEM-FUEL	118A
PRIMER-ENGINE	67
PRIMER-ENGINE	68A
PRIMER-ENGINE	68B
PRIMER-ENGINE	68C
PRIMER-ENGINE	118A
PROBE-POWER ECONOMY INDICATOR	74
PROBE-POWER ECONOMY INDICATOR	75
PROPELLER	71
PROPELLER	72
PROPELLER	72A
PROPELLER	72B
PROPELLER	72C
PROPELLER BLADE	72
PROPELLER BLADE	72A
PROPELLER BLADE	72B
PROPELLER BLADE	72C
PROPELLER CONTROL	74
PROPELLER CONTROL	75
PROPELLER GOVERNOR	76
PROPELLER GOVERNOR	77
PROPELLER GOVERNOR	79
PROPELLER GOVERNOR	79A
PROPELLER GOVERNOR	81A
PROPELLER GOVERNOR	81C
PROPELLER GOVERNOR	81D
PROPELLER GOVERNOR-HOOF	80
PROPELLER GOVERNOR-GARWIN	81
PROPELLER GOVERNOR-GARWIN	81B
PROPELLER PITCH CONTROL	67
PROPELLER PITCH CONTROL	68
PROPELLER PITCH CONTROL	68A
PROPELLER PITCH CONTROL	68B
PROPELLER PITCH CONTROL	68C
PROPELLER SPINNER	71

ALPHABETICAL INDEX

NOMENCLATURE	FIGURE
P (cont)	
PROPELLER WEIGHT	72
PROPELLER WEIGHT	72A
PULL-DOOR	54
PUMP COOLING SCOOP	73
PUMP COOLING SCOOP	73A
PUMP DRAIN LINE-ENGINE	76
PUMP-AUXILIARY FUEL	108
PUMP-AUXILIARY FUEL	103
PUMP-AUXILIARY FUEL	105
PUMP-AUXILIARY FUEL	104
PUMP-AUXILIARY FUEL	107
PUMP-VACUUM	116
PUMP-VACUUM	117
PUMP-VACUUM	136
PUMP-VACUUM	117A
PUMP-VACUUM	117D
PUMP-VACUUM	117E
PUSH-PULL ROD-AILERON	14
PYLON-ELEVATOR	21
R	
RACK-PARKING BRAKE POSITIONING	40
RADIO COVER	68A
RADIO COVER	68B
RADIO COVER	68C
RAIL-SEAT	22
RAIL-SEAT	23
RATCHET-FLAP LEVER	97
REAR CABIN TOP	26
REAR SEAT	64
REAR SEAT BACK	64
REAR SEAT LATCH	64
REAR SPAR-FUSELAGE	32
REAR SPAR-FUSELAGE	32A
REAR STOWABLE SEAT	65
REAR WINDOW	26
RECEIVER-ASH	60
RECEIVER-ASH	63A
RECEPTACLE-ASH	58
RECEPTACLE-ASH	57
RECEPTACLE-ASH	57A
RECEPTACLE-EXTERNAL POWER	125
RECEPTACLE-EXTERNAL POWER	125A
RECEPTACLE-EXTERNAL POWER	125B
RECLINING FRONT SEAT	59A
REFUELING EQUIPMENT INSTL	70B
REFLECTOR-DOME LIGHT	123
REGISTRATION NUMBER PLATE	67
REGISTRATION NUMBER PLATE	68
REGULATOR-OXYGEN	119
REGULATOR-OXYGEN	120A
REGULATOR-OXYGEN	120B
REGULATOR-OXYGEN	120C
REGULATOR-VOLTAGE	76A
REGULATOR-VOLTAGE	77B
REGULATOR-VOLTAGE	121
REGULATOR-VOLTAGE	122
RELIEF VALVE-SUCTION	116
RELIEF VALVE-SUCTION	117
RELIEF VALVE-SUCTION	117A
RELIEF VALVE-SUCTION	117D
RELIEF VALVE-SUCTION	117E
RELIEF VALVE-SUCTION	136
RESISTOR-FUEL PUMP	108
RESISTOR-FUEL PUMP	121

NOMENCLATURE	FIGURE
R (cont)	
RETAINER CORRECTION CARD	67
RETAINER CORRECTION CARD	68
RETAINER CORRECTION CARD	68A
RETAINER CORRECTION CARD	68B
RETAINER-WINDSHIELD	31
RETAINER-WINDOW	26
RHEOSTAT-LIGHTS	67
RHEOSTAT-LIGHT	68
RHEOSTAT-MAP LIGHT	94B
RIB-DORSAL	18
RIB-DORSAL	17
RIB-RUDDER	20
RIB-STABILIZER	19
RIB-WING	4
RIB-WING	6
RIB-WING	6A
RIB-WING	5
RING-TIE DOWN	70
ROD END-THROTTLE CONTROL	75
ROD-AILERON PUSH-PULL	35
ROLLER-FLAP	15
ROLLER-FRONT SEAT	63
ROLLER-FRONT SEAT	63C
ROLLER-SEAT	57A
ROLLER-SEAT	60
ROLLER-SEAT	62
ROLLER-SEAT	61
ROLLER-SEAT	61A
ROLLER-SEAT	59
ROTATING BEACON	121
ROTATING BEACON	122
ROTATING BEACON	124
ROTATING BEACON ADAPTER	24
ROTATING BEACON SOCKET	124
ROTATING BEACON SWITCH	67
ROTATING BEACON SWITCH	68
ROTATING BEACON SWITCH	124
RUDDER	20
RUDDER BALANCE WEIGHT	20
RUDDER BAR	91
RUDDER BAR	92
RUDDER BAR BEARING	91
RUDDER BAR BEARING	92
RUDDER BAR SHIELD	55
RUDDER BAR SHIELD	56
RUDDER BELLCRANK	20
RUDDER BUNGEE	98
RUDDER CONTROL SYSTEM	98
RUDDER CONTROL CABLE	98
RUDDER CONTROL SYSTEM	99
RUDDER CONTROL CABLE	99
RUDDER PEDAL	91
RUDDER PEDAL	92
RUDDER PEDAL DUAL CONTROL	91
RUDDER PEDAL DUAL CONTROL	92
RUDDER PEDAL-DISENGAGING	92
RUDDER RIB	20
RUDDER SPAR	20
RUDDER TAB	20
RUDDER TIP	20
RUDDER TRIM INSTALLATION	99A
RUDDER TRIM WHEEL	98
RUDDER TRIM WHEEL	99A
RUDDER TRIM WHEEL COVER	55
RUDDER TRIM WHEEL COVER	56
RUDDER TRIM WHEEL COVER	98
RUDDER TRIM WHEEL COVER	99A
RUG-GLOVE BOX & MAPCASE	69

ALPHABETICAL INDEX

NOMENCLATURE	FIGURE
S	
SAMPLER CUP-FUEL	13A
SAMPLER VALVE-FUEL	13A
SCOOP-CABIN AIR VENT	7
SCOOP-CABIN AIR VENT	8
SCOOP-CABIN AIR VENT	8A
SCOOP-PUMP COOLING	73
SCOOP-PUMP COOLING	73A
SCUFF PLATE-BAGGAGE COMPARTMENT	58
SCUFF PLATE-BAGGAGE COMPARTMENT	57
SCUFF PLATE-BAGGAGE COMPARTMENT	57A
SEAL-BAGGAGE DOOR	52
SEAL-CAMERA CUT-OUT	133
SEAL-DOOR	49
SEAL-DOOR	50
SEAL-LITTER DOOR	353
SEAL-WINDOW	49
SEALS-FLOATPLANE CARGO PACK	129
SEAT ADJUSTMENT KNOB	60
SEAT ADJUSTMENT KNOB	59
SEAT ASH TRAY	63
SEAT ASH TRAY	63C
SEAT BACK	59
SEAT BACK ACTUATOR-POWER	63A
SEAT BACK LATCH	66
SEAT BACK-FRONT	59
SEAT BACK-FRONT	59A
SEAT BACK-FRONT	60
SEAT BACK-FRONT	61
SEAT BACK-FRONT	61A
SEAT BACK-FRONT	63C
SEAT BACK-REAR	64
SEAT BACK-REAR	64A
SEAT BELT	60
SEAT BELT	61
SEAT BELT	61A
SEAT BELT	65
SEAT BELT	65B
SEAT BELT	66
SEAT BELT	63
SEAT BELT	63C
SEAT BELT	64
SEAT BELT	64A
SEAT BELT	59
SEAT BELT-STRETCHER	130
SEAT BOTTOM-POWER	63B
SEAT FRAME-DIVIDED MIDDLE	65A
SEAT FRAME-FRONT	63
SEAT HANDLE	59
SEAT HANDLE	59A
SEAT HANDLE	60
SEAT HANDLE	61
SEAT HANDLE	61A
SEAT HANDLE KNOB	59
SEAT HANDLE KNOB	59A
SEAT HANDLE KNOB	60
SEAT HANDLE KNOB	61
SEAT HANDLE KNOB	61A
SEAT HANDLE-FRONT ADJUSTMENT	63
SEAT HANDLE-FRONT ADJUSTMENT	63C
SEAT LATCH-REAR	64
SEAT LATCH-REAR	64A
SEAT RAIL	22
SEAT RAIL	23
SEAT ROLLER	59
SEAT ROLLER	59A
SEAT ROLLER	61
SEAT ROLLER	61A
SEAT ROLLER	62
SEAT ROLLER KIT	60
SEAT ROLLER KIT	63
SEAT ROLLER KIT	63C
SEAT STOP	59
SEAT STOP	59A
SEAT STOP	60
SEAT STOP	61
SEAT STOP	61A
SEAT STOP	62
SEAT STOP	63
SEAT STOP	63C
SEAT STOP	63A
SEAT-ADJUSTABLE FRONT	59
SEAT-ADJUSTABLE FRONT	59A
SEAT-ADJUSTABLE FRONT	60
SEAT-ADJUSTABLE FRONT	61
SEAT-ADJUSTABLE FRONT	61A
SEAT-ADJUSTABLE FRONT	62
SEAT-AUXILIARY	66
SEAT-CAMERA	131
SEAT-CAMERA	132
SEAT-CHILD	65B
SEAT-DIVIDED MIDDLE	65A
SEAT-FRONT	60
SEAT-FRONT	59
SEAT-INFINITE ADJUST	63C
SEAT-POWER	63A
SEAT-REAR	64
SEAT-REAR	64A
SEAT-RECLINING FRONT	61
SEAT-RECLINING FRONT	61A
SEAT-STOWABLE REAR	65
SEAT-VERTICALLY ADJUSTABLE FRONT	63
SELECTOR VALVE-FUEL TANK	105
SELECTOR VALVE-FUEL	112
SELECTOR VALVE-FUEL	109
SENSITIVITY ADJUSTER-TACTAIR	135
SENSOR-OVERVOLTAGE	68B
SENSOR-OVERVOLTAGE	68C
SEPARATOR-OIL	116
SEPARATOR-OIL	117
SEPARATOR-OIL	117A
SEPARATOR-OIL	117D
SEPARATOR-OIL	136
SERVO-AILERON-TACTAIR	134
SERVO-AILERON-TACTAIR	135
SERVO-ELEVATOR-TACTAIR	134
SERVO-WING LEVELER	95A
SHAFT-DOOR LATCH	51
SHAFT-TACHOMETER	67
SHAFT-TACHOMETER	68
SHAFT-TACHOMETER	68A
SHAFT-TACHOMETER	68B
SHAFT-TACHOMETER	68C
SHELF-BAGGAGE	58
SHELF-BAGGAGE	57
SHELF-BAGGAGE	57A
SHIELD-AUXILIARY PUMP	107
SHIELD-CONTROL TEE	56
SHIELD-FUEL PUMP	108
SHIELD-RUDDER BAR	56
SHIELD-RUDDER BAR	55
SHIM-MAIN LANDING GEAR	41

ALPHABETICAL INDEX

NOMENCLATURE	FIGURE
S (cont)	
SHIM-MAIN LANDING GEAR	40
SHOCK MOUNT	57
SHOCK MOUNT	58
SHOCK MOUNT	68A
SHOCK MOUNT	68B
SHOCK MOUNT	68C
SHOCK MOUNT-ENGINE	76
SHOCK MOUNT-ENGINE	77
SHOCK MOUNTED ALTERNATOR	123B
SHOCK MOUNTED INSTRUMENT PANEL	67
SHOCK MOUNTED INSTRUMENT PANEL	68
SHOCK MOUNTED INSTRUMENT PANEL	68A
SHOCK MOUNTED INSTRUMENT PANEL	68B
SHOCK MOUNTED INSTRUMENT PANEL	68C
SHOCK PANEL COVER	67
SHOCK PANEL COVER	68
SHOCK PANEL COVER	68A
SHOCK PANEL COVER	68B
SHOCK PANEL COVER	68C
SHOULDER HARNESS	70
SHROUD-MUFFLER	83
SHROUD-MUFFLER	82
SHUT OFF VALVE-TACTAIR	134
SILENCER-REAR AIR VENT	88A
SILL-DOOR	24
SILL-DOOR	25
SKI PLANE COMPONENTS	126A
SKINS & STRINGERS-WING	11
SKINS & STRINGERS-WING	12
SKINS & STRINGERS-WING	12A
SKYWAGON LETTERING	2
SLIDE-TIE DOWN	70
SOCKET-CONTROL TUBE	67
SOCKET-CONTROL TUBE	68
SOCKET-DOME LIGHT	123
SOCKET-FLASHING BEACON	124A
SOCKET-INSTRUMENT PANEL LIGHT	123
SOCKET-ROTATING BEACON	124
SOLENOID VALVE	114
SOLENOID VALVE	113
SOLENOID VALVE	107
SOUNDPROOFING-COWL DECK	53
SOUNDPROOFING-DOOR	54
SOUNDPROOFING-FLOOR	55
SPAR BEARING BLOCK	30
SPAR BEARING BLOCK	32
SPAR BEARING BLOCK	32A
SPAR-AILERON	14
SPAR-ELEVATOR	21
SPAR-FIN	18
SPAR-FIN	17
SPAR-FUSELAGE REAR	32
SPAR-FUSELAGE REAR	32A
SPAR-FUSELAGE FORWARD	30
SPAR-RUDDER	20
SPAR-STABILIZER	19
SPAR-WING	9
SPAR-WING	10
SPAR-WING	10A
SPARK PLUG	76A
SPARK PLUG	77B
SPEED INDICATOR-VERTICAL	102
SPEED INDICATOR-VERTICAL	101
SPEED INDICATOR-VERTICAL	67
SPEED INDICATOR-VERTICAL	68
SPINNER BULKHEAD	71
SPINNER DOME	71
SPINNER-PROPELLER	71
S (cont)	
SPOTLIGHT	123
SPRING-AILERON INTERCONNECT	126A
SPRING-CROSSWIND GEAR	40A
SPRING-LANDING GEAR MAIN	40
SPRING-MAIN LANDING GEAR	41
SPRING-PARKING BRAKE	90
SPRING-PEDAL RETURN	91
SPRING-RUDDER CENTERING	126A
SPROCKET-AILERON CHAIN	94
SPROCKET-TRIM CHAIN	100
STABILIZER	19
STABILIZER ACTUATOR	100
STABILIZER ACTUATOR HINGE	100
STABILIZER STOP	17
STABILIZER STOP	18
STABILIZER HINGE	19
STABILIZER RIB	19
STABILIZER SPAR	19
STABILIZER TIP	19
STABILIZER TRIM CONTROL SYSTEM	100
STABILIZER TRIM WHEEL	100
STABILIZER TRIM WHEEL	100A
STABILIZER TRIM WHEEL COVER	100
STABILIZER TRIM CHAIN	100
STABILIZER TRIM CHAIN SPROCKET	100
STABILIZER TRIM CHAIN SPROCKET	100A
STABILIZER TRIM CONTROL CABLE	100
STACK-EXHAUST	76
STACK-EXHAUST	77
STACKS-ENGINE EXHAUST	83
STACKS-ENGINE EXHAUST	82
STALL WARNING UNIT-WING	3
STALL WARNING HORN	68A
STALL WARNING HORN	69
STALL WARNING HORN INSTL	102B
STARTER	76A
STARTER	77B
STARTER & LOCK	67
STARTER CIRCUIT SWITCH	68
STARTER SWITCH	68
STARTER SWITCH	68D
STARTER SWITCH	68E
STARTING VIBRATOR	121
STATIC DISCHARGER	14
STATIC DISCHARGER	20
STATIC DISCHARGER	21
STATIC SOURCE-ALTERNATE	101
STATIC SOURCE-ALTERNATE	102
STATIC SOURCE-ALTERNATE	102A
STATIC SOURCE SUMP	101
STATIC SOURCE SUMP	102
STATIONARY INSTRUMENT PANEL	28
STATIONARY INSTRUMENT PANEL	29
STATIONARY INSTRUMENT PANEL	67
STATIONARY INSTRUMENT PANEL	68
STATIONARY INSTRUMENT PANEL	68A
STATIONARY INSTRUMENT PANEL	68B
STATIONARY INSTRUMENT PANEL	68C
STATIONARY INSTRUMENT PANEL COVER	68
STATIONARY INSTRUMENT PANEL COVER	68A
STATIONARY INSTRUMENT PANEL COVER	68B
STATIONARY INSTRUMENT PANEL COVER	68C
STATIONARY PANEL-FLOATPLANE	126
STENCILS-EXTERIOR MARKINGS	28
STEP-AUXILIARY REFUELING	70B
STEP-CABIN	22
STEP-CABIN	23
STEP-FLOATPLANE	127

ALPHABETICAL INDEX

NOMENCLATURE	FIGURE
S (cont)	
STINGER	39
STOP-CABIN DOOR	50
STOP-COWL FLAP-AMPHIBIAN	128
STOP-DOOR	49
STOP-DOOR LATCH	51
STOP-ELEVATOR	38
STOP-SEAT	59
STOP-SEAT	59A
STOP-SEAT	60
STOP-SEAT	61
STOP-SEAT	61A
STOP-SEAT	62
STOP-SEAT	63
STOP-SEAT	63C
STOP-SEAT	63A
STOP-STABILIZER	17
STOP-STABILIZER	18
STOWABLE SEAT	65
STRAINER DRAIN CONTROL-FUEL	67
STRAINER DRAIN CONTROL-FUEL	68
STRAINER DRAIN CONTROL-FUEL	68A
STRAINER DRAIN CONTROL-FUEL	74
STRAINER DRAIN CONTROL-FUEL	75
STRAINER DRAIN CONTROL-FUEL	109
STRAINER DRAIN CONTROL-FUEL	110
STRAINER-FUEL	103
STRAINER-FUEL	104
STRAINER-FUEL	105
STRAINER-FUEL	107
STRAINER-FUEL	108
STRAINER-FUEL	109
STRAINER-FUEL	110
STRAINER-FUEL	110A
STRAINER-FUEL TANK	13
STRAP BONDING	77
STRAP-BONDING	76
STRAP-GROUND	75
STRETCHER	130
STRIKE PLATE-DOOR LATCH	32
STRIKE PLATE-BAGGAGE DOOR	52
STRIKE PLATE-LITTER DOOR	358
STRINGERS & SKINS-WING	11
STRINGERS & SKINS-WING	12
STRINGERS & SKINS-WING	12A
STROBE LIGHT	3
STROBE LIGHT	3A
STROBE LIGHT POWER SUPPLY	3
STROBE LIGHT POWER SUPPLY	3A
STRUCTURE-CABIN DOOR LH	49
STRUCTURE-CABIN DOOR RH	50
STRUCTURE-FRONT SECTION	28
STRUCTURE-FRONT SECTION	24
STRUCTURE-FRONT SECTION	29
STRUCTURE-FRONT SECTION	25
STRUCTURE-WING	4
STRUCTURE-WING	5
STRUCTURE-WING	5A
STRUCTURE-WING EXTENDED RANGE	6
STRUCTURE-WING EXTENDED RANGE	6A
STRUT FAIRING-WING	16
STRUT FITTING-WING	16
STRUT-WING	16
SUCTION GAGE	67
SUCTION GAGE	68
SUCTION GAGE	68A
SUCTION GAGE	68B
SUCTION GAGE	68C
SUCTION GAGE	95B
S (cont)	
SUCTION GAGE	116
SUCTION GAGE	117
SUCTION GAGE	117A
SUCTION GAGE	117B
SUCTION GAGE	117C
SUCTION GAGE	117E
SUCTION GAGE	134
SUCTION GAGE	135
SUCTION HOSE	116
SUCTION HOSE	117
SUCTION HOSE	136
SUCTION HOSE	117A
SUCTION RELIEF VALVE	116
SUCTION RELIEF VALVE	117
SUCTION RELIEF VALVE	117A
SUCTION RELIEF VALVE	117D
SUCTION RELIEF VALVE	117E
SUCTION RELIEF VALVE	136
SUMP INSTALLATION-OIL DRAIN	76
SUMP-PITOT STATIC SOURCE	102
SUMP-PITOT STATIC SOURCE	101
SUN VISOR	70
SUPPORT-CONTROL TUBE	68A
SUPPORT-CONTROL TUBE	68B
SUPPORT-CONTROL TUBE	68C
SWITCH & CIRCUIT BREAKER INSTL	68D
SWITCH & CIRCUIT BREAKER INSTL	68E
SWITCH-AUXILIARY FUEL	67
SWITCH-AUXILIARY FUEL	68
SWITCH-FLASHING BEACON	68D
SWITCH-FLASHING BEACON	68E
SWITCH-FUEL PUMP	68D
SWITCH-FUEL PUMP	68E
SWITCH-IGNITION	68D
SWITCH-IGNITION	68E
SWITCH-INSTRUMENT PANEL LIGHT	123
SWITCH-LANDING LIGHT	67
SWITCH-LANDING LIGHT	68
SWITCH-LANDING LIGHT	68D
SWITCH-LANDING LIGHT	68E
SWITCH-MAP LIGHT	123A
SWITCH-MASTER	67
SWITCH-MASTER	68
SWITCH-MASTER	68D
SWITCH-MASTER	68E
SWITCH-MICROPHONE	94B
SWITCH-NAVIGATION LIGHTS	67
SWITCH-NAVIGATION LIGHTS	68
SWITCH-NAVIGATION LIGHTS	68D
SWITCH-NAVIGATION LIGHTS	68E
SWITCH-OIL DILUTION	67
SWITCH-OIL DILUTION	68
SWITCH-OIL DILUTION	68D
SWITCH-OIL DILUTION	68E
SWITCH-OIL DILUTION	113
SWITCH-OIL DILUTION	114
SWITCH-PITOT HEAT	67
SWITCH-PITOT HEAT	68
SWITCH-PITOT HEAT	68D
SWITCH-PITOT HEAT	68E
SWITCH-PITOT HEAT	102
SWITCH-PITOT HEATER	101
SWITCH-POWER SEAT	63A
SWITCH-ROTATING BEACON	67
SWITCH-ROTATING BEACON	68
SWITCH-ROTATING BEACON	124
SWITCH-STARTER & LOCK	67
SWITCH-STARTER & LOCK	68

ALPHABETICAL INDEX

NOMENCLATURE	FIGURE
S (cont)	
SWITCH-STARTER & LOCK	63D
SWITCH-STARTER & LOCK	68E
SWITCH-STARTER CIRCUIT	68
SWITCH-THROTTLE	105
SWITCH-THROTTLE	74
SWITCH-VACUUM PRESS TO TEST	67
SWITCH-VACUUM PRESS TO TEST	68
SYSTEM-AILERON CONTROL	95
SYSTEM-ELEVATOR CONTROL	96
SYSTEM-FLAP CONTROL	97
SYSTEM-FUEL	103
SYSTEM-FUEL	104
SYSTEM-FUEL	109
SYSTEM-FUEL PRIMER	118
SYSTEM-FUEL PRIMER	118A
SYSTEM-OIL	113
SYSTEM-OIL	114
SYSTEM-OIL DILUTION	113
SYSTEM-OXYGEN	119
SYSTEM-OXYGEN	120
SYSTEM-PITOT	102
SYSTEM-PITOT	101
SYSTEM-RUDDER CONTROL	98
SYSTEM-RUDDER CONTROL	99
SYSTEM-SELECTABLE TANK FUEL	105
SYSTEM-STABILIZER TRIM CONTROL	100
SYSTEM-TACTAIR VACUUM	136
SYSTEM-VACUUM	76
SYSTEM-VACUUM	77
SYSTEM-VACUUM	116
SYSTEM-VACUUM	117
SYSTEM-VACUUM	117A
SYSTEM-VACUUM	117B
SYSTEM-VACUUM	117C
SYSTEM-VACUUM-FWD OF FIREWALL	117D
SYSTEM-WING LEVELER	95A
T	
T-2 TACTAIR AUTO PILOT	135
T-3 TACTAIR AUTO PILOT	134
TAB-RUDDER	20
TACHOMETER	67
TACHOMETER	68
TACHOMETER	68A
TACHOMETER	68B
TACHOMETER	68C
TACHOMETER SHAFT	67
TACHOMETER SHAFT	68
TACHOMETER SHAFT	68A
TACHOMETER SHAFT	68B
TACHOMETER SHAFT	68C
TACTAIR AILERON SERVO	134
TACTAIR AILERON AMPLIFIER	135
TACTAIR AILERON SERVO	135
TACTAIR ALTITUDE HOLD	134
TACTAIR AUTO PILOT-T-2	135
TACTAIR AUTO PILOT-T-3	134
TACTAIR CABLE	134
TACTAIR CABLE	135
TACTAIR COMMAND CONTROL	134
TACTAIR CONTROL UNIT	135
TACTAIR ELEVATOR AMPLIFIER	134
TACTAIR HOSE	135
TACTAIR MOUNTING BASE	135
TACTAIR VACUUM SYSTEM	136
T (cont)	
TAIL LIGHT	39
TAILCONE-FUSELAGE	35
TAILCONE-FUSELAGE	35A
TAILCONE-FUSELAGE	38
TAILGEAR MOUNTING CASTING	38
TAILWHEEL	45
TAILWHEEL	48
TAILWHEEL	47
TAILWHEEL	48A
TAILWHEEL	48B
TAILWHEEL ARM	47
TAILWHEEL AXLE	48
TAILWHEEL AXLE	47
TAILWHEEL AXLE	48A
TAILWHEEL AXLE	48B
TAILWHEEL CABLE	45
TAILWHEEL FORK	48
TAILWHEEL FORK	47
TAILWHEEL FORK	48A
TAILWHEEL FORK	48B
TAILWHEEL HUB	47
TAILWHEEL LOCK SYSTEM	46B
TAILWHEEL MOUNTING SPRING	46
TAILWHEEL MOUNTING TUBE	45
TAILWHEEL PAWL	47
TAILWHEEL PAWL	48
TAILWHEEL PAWL	48A
TAILWHEEL PAWL	48B
TAILWHEEL STEERING BELLCRANK	98
TAILWHEEL STEERING BELLCRANK	99
TAILWHEEL TIRE	48
TAILWHEEL TIRE	48A
TAILWHEEL TIRE	48B
TAILWHEEL TUBE	48
TAILWHEEL TUBE	48A
TAILWHEEL TUBE	48B
TAILWHEEL-ANTI-SWIVEL	46
TANK SELECTOR VALVE-FUEL	105
TANK SELECTOR COVER-FUEL	105
TANK-FUEL	13
TANK-OXYGEN	119
TANK-OXYGEN	120
TANK-VAPOR SEP & FUEL ACCUMULATOR	103
TANK-VAPOR SEP & FUEL ACCUMULATOR	104
TANK-VAPOR SEP & FUEL ACCUMULATOR	105
TEMPERATURE BULB-CYLINDER HEAD	76
TEMPERATURE GAGE-OIL	68
TEMPERATURE GAGE-OIL	68A
TEMPERATURE GAGE-OIL	68B
TEMPERATURE GAGE-OIL	68C
TEMPERATURE GAGE-OIL	114
TEMPERATURE GAGE-OIL	113
TEMPERATURE GAGE-CYLINDER HEAD	68
TEMPERATURE GAGE-CYLINDER HEAD	68A
TEMPERATURE GAGE-CYLINDER HEAD	68B
TEMPERATURE GAGE-CYLINDER HEAD	68C
TEMPERATURE GAGE-OUTSIDE AIR	70
THERMOCOUPLE-ENGINE	77
THERMOCOUPLE-POWER ECONOMY LEAD	68A
THERMOCOUPLE-POWER ECONOMY LEAD	68B
THERMOCOUPLE-POWER ECONOMY LEAD	68C
THROTTLE CONTROL	67
THROTTLE CONTROL	68
THROTTLE CONTROL	68A
THROTTLE CONTROL	68B
THROTTLE CONTROL	68C
THROTTLE CONTROL	74
THROTTLE CONTROL	75

ALPHABETICAL INDEX

NOMENCLATURE	FIGURE
T (cont)	
THROTTLE CONTROL BELLCRANK	78
TIE DOWN SLIDE & RING	70
TIP-ELEVATOR	21
TIP-RUDDER	20
TIP-STABILIZER	19
TIP-VERTICAL FIN-ROTATING BEACON	124
TIP-VERTICAL FIN-FLASHING BEACON	124A
TIP-WING	3A
TIP-WING	4
TIP-WING	5
TIP-WING	6
TIRE	41
TIRE EXPANDER	70
TIRE-MAIN GEAR	40
TIRE-MAIN GEAR	40A
TIRE-MAIN GEAR	41
TIRE-MAIN GEAR	42
TIRE-MAIN GEAR	42A
TIRE-MAIN GEAR	42B
TIRE-MAIN GEAR	43
TIRE-TAILWHEEL	48
TIRE-TAILWHEEL	47
TOP UPHOLSTERY	53
TOP-CABIN	24
TOP-CABIN	25
TOP-REAR CABIN	26
TRANSMITTER FLOAT-FUEL	13
TRANSMITTER-FUEL	13
TRAY-ASH	60
TRAY-ASH	61
TRAY-ASH	61A
TRAY-ASH	58
TRAY-ASH	57
TRAY-ASH	57A
TRIM CONTROL SYSTEM-STABILIZER	100
TRIM CONTROL INDICATOR	100
TRIM CONTROL INDICATOR	100A
TRIM WHEEL COVER-RUDDER	56
TRIM WHEEL COVER-RUDDER	55
TRIM WHEEL-RUDDER	98
TRIM WHEEL-STABILIZER	100
TRIM WHEEL-STABILIZER	100A
TRUE AIRSPEED INDICATOR	68A
TRUE AIRSPEED INDICATOR	68B
TRUE AIRSPEED INDICATOR	68C
TRUE AIRSPEED INDICATOR	101
TRUE AIRSPEED INDICATOR	102
TUBE-AILERON CARRY THRU	95
TUBE-AIR BOX DRAIN	76
TUBE-BREATHER	76
TUBE-BREATHER	77
TUBE-CONTROL	94
TUBE-GENERATOR BLAST	76
TUBE-GENERATOR BLAST	77
TUBE-LANDING GEAR	43
TUBE-PITOT	102
TUBE-PITOT	101
TUBE-PITOT	4
TUBE-TAILWHEEL SPRING MOUNTING	46
TUBE-TAILWHEEL MOUNTING	45
TUBE-TAILWHEEL	48
TUBE-TAILWHEEL	47
TUBELESS TIRE VALVE	70
TUNNEL COVER	55
TUNNEL COVER-AFT	28
TUNNEL COVER-AFT	29
TURN & BANK INDICATOR	67
TURN & BANK INDICATOR	68
T (cont)	
TURN & BANK INDICATOR	68A
TURN & BANK INDICATOR	68C
TURN & BANK INDICATOR	68B
TURN COORDINATOR INDICATOR	68C
TURN COORDINATOR INDICATOR	68B
TURN COORDINATOR INDICATOR	95B
U	
UNIVERSAL JOINT	94
UPHOLSTERY-BAGGAGE COMPARTMENT	57
UPHOLSTERY-BAGGAGE COMPARTMENT	57A
UPHOLSTERY-BAGGAGE COMPARTMENT	58
UPHOLSTERY-CABIN TOP & FIREWALL	53
UPHOLSTERY-CABIN DOORS	54
UPHOLSTERY-CABIN SIDE PANELS	58
UPHOLSTERY-CABIN SIDE PANELS	57
UPHOLSTERY-CABIN SIDE PANELS	57A
UPHOLSTERY-FLOORBOARD & BAG COMPT	55
UPHOLSTERY-FLOORBOARD DELUXE	56
UPHOLSTERY-HOW TO ORDER	PAGE XII
V	
VACUUM AIR FILTER	117B
VACUUM AIR FILTER	117C
VACUUM AIR FILTER	117E
VACUUM PUMP	116
VACUUM PUMP	117
VACUUM PUMP	117A
VACUUM PUMP	117D
VACUUM PUMP	117F
VACUUM PUMP	136
VACUUM SWITCH-PRESS TO TEST	67
VACUUM SWITCH-PRESS TO TEST	68
VACUUM SYSTEM	76
VACUUM SYSTEM	77
VACUUM SYSTEM	116
VACUUM SYSTEM	117
VACUUM SYSTEM	117A
VACUUM SYSTEM	117B
VACUUM SYSTEM	117C
VACUUM SYSTEM	117E
VACUUM SYSTEM-FWD OF FIREWALL	117D
VACUUM SYSTEM-TACTAIR	136
VALVE CHECK	107
VALVE CONTROL-FUEL	105
VALVE CONTROL-FUEL	104
VALVE GUIDE-DEFROST	89
VALVE HANDLE-FUEL	103
VALVE HANDLE-FUEL	105
VALVE-AIR VENT REAR	88
VALVE-AIR VENT REAR	89A
VALVE-CHECK	108
VALVE-DEFROST	89
VALVE-DRAIN	13A
VALVE-DRAIN	109
VALVE-FUEL	103
VALVE-FUEL	104
VALVE-FUEL	105
VALVE-FUEL	111
VALVE-FUEL DRAIN	13A
VALVE-FUEL DRAIN	105
VALVE-FUEL DRAIN	103

ALPHABETICAL INDEX

NOMENCLATURE	FIGURE
V (cont)	
VALVE-FUEL DRAIN	104
VALVE-FUEL DRAIN	110
VALVE-FUEL SAMPLER	13A
VALVE-FUEL SELECTOR	112
VALVE-FUEL SELECTOR	109
VALVE-FUEL TANK SELECTOR	105
VALVE-FUEL VENT	13
VALVE-QUICK DRAIN OIL	77
VALVE-OXYGEN	119
VALVE-OXYGEN	120
VALVE-OXYGEN	120A
VALVE-OXYGEN	120B
VALVE-OXYGEN	120C
VALVE-SHUT OFF-TACTAIR	134
VALVE-SOLENOID	114
VALVE-SOLENOID	113
VALVE-SOLENOID	107
VALVE-SUCTION RELIEF	116
VALVE-SUCTION RELIEF	117
VALVE-SUCTION RELIEF	117A
VALVE-SUCTION RELIEF	117D
VALVE-SUCTION RELIEF	117E
VALVE-SUCTION RELIEF	136
VALVE-TUBELESS TIRE	70
VALVE-WARM AIR	89
VALVE-WING LEVELER	68B
VALVE-WING LEVELER	68C
VALVE-WING LEVELER	95B
VAPOR SEPARATOR TANK	105
VAPOR SEPARATOR TANK	103
VAPOR SEPARATOR TANK	104
VALVE-OXYGEN FILLER	120
VENT HOSE	117
VENT LINE	116
VENT LINE	136
VENT LINE-FUEL	13
VENT LINE-FUEL	109
VENT SCOOP-CABIN AIR	7
VENT SCOOP-CABIN AIR	9
VENT SCOOP-CABIN AIR	8A
VENT TUBE	117D
VENT TUBE	117E
VENT-FUEL VALVE	13
VENTILATION SYSTEM-CABIN	88
VENTILATION SYSTEM-CABIN	88A
VENTRAL FIN	126A
VERTICAL SPEED INDICATOR	67
VERTICAL SPEED INDICATOR	68
VERTICAL SPEED INDICATOR	68A
VERTICAL SPEED INDICATOR	68B
VERTICAL SPEED INDICATOR	68C
VERTICAL SPEED INDICATOR	101
VERTICAL SPEED INDICATOR	102
VERTICALLY ADJUSTABLE FRONT SEAT	63
VIBRATOR-STARTING	121
VISOR-SUN	70
VOLTAGE REGULATOR	76A
VOLTAGE REGULATOR	77B
VOLTAGE REGULATOR	121
VOLTAGE REGULATOR	122
VOLTAGE REGULATOR-ALTERNATOR	121
VOLTAGE REGULATOR-ALTERNATOR	122
W	
WARNING HORN-STALL	68A
W (cont)	
WARNING HORN-STALL	69
WARNING HORN-STALL	102B
WARNING UNIT-STALL	3
WEIGHT-AILERON	14
WEIGHT-ELEVATOR BALANCE	21
WEIGHT-PROPELLER	72
WEIGHT-PROPELLER	72A
WEIGHT-RUDDER BALANCE	20
WHEEL & BRAKE-MAIN GEAR	43
WHEEL & BRAKE-MAIN GEAR	42
WHEEL & BRAKE-MAIN GEAR	42A
WHEEL & BRAKE-MAIN GEAR	42B
WHEEL & BRAKE	41
WHEEL & BRAKE	40
WHEEL & BRAKE-CROSSWIND GEAR	42C
WHEEL & BRAKE-CROSSWIND GEAR	44
WHEEL & TIRE-TAILWHEEL	48
WHEEL & TIRE-TAILWHEEL	47
WHEEL & TIRE-TAILWHEEL	48A
WHEEL & TIRE-TAILWHEEL	48B
WHEEL COVER-RUDDER TRIM	95
WHEEL COVER-RUDDER TRIM	55
WHEEL COVER-STABILIZER TRIM	100
WHEEL EMBLEM-CONTROL	94
WHEEL EMBLEM-CONTROL	94A
WHEEL-CONTROL	94
WHEEL-CONTROL	94A
WHEEL-CONTROL	94B
WHEEL-RUDDER TRIM	98
WHEEL-STABILIZER TRIM	100
WHEEL-STABILIZER TRIM	100A
WINDLACE-CABIN DOOR	58
WINDLACE-CABIN DOOR	57
WINDLACE-CABIN DOOR	57A
WINDOW FRAME-DOOR	50
WINDOW HINGE	49
WINDOW RETAINER	26
WINDOW SEAL	49
WINDOW-CABIN DOOR	49
WINDOW-CABIN DOOR	50
WINDOW-CAMERA	131
WINDOW-CAMERA	133
WINDOW-CAMERA	132
WINDOW-REAR SIDE	26
WINDSHIELD	31
WINDSHIELD	22
WINDSHIELD	23
WINDSHIELD RETAINER	31
WING	3
WING	3A
WING FAIRING	3
WING FAIRING	3A
WING FAIRING	5
WING FAIRING	6
WING FAIRING	6A
WING FILLET	27
WING FLAP	15
WING LEADING EDGE	8
WING LEADING EDGE	8A
WING LEADING EDGE	7
WING LEVELER COMPONENTS	95B
WING LEVELER INSTALLATION	95A
WING LEVELER SERVO	95A
WING LEVELER VALVE	68B
WING LEVELER VALVE	95B
WING NAVIGATION LIGHT	3
WING NAVIGATION LIGHT	3A
WING RIB	4

ALPHABETICAL INDEX

NOMENCLATURE	FIGURE
W (cont)	
WING RIB	5
WING RIB	6
WING RIB	6A
WING SKINS & STRINGERS	11
WING SKINS & STRINGERS	12
WING SKINS & STRINGERS	12A
WING SPAR	9
WING SPAR	10
WING SPAR	10A
WING STALL WARNING UNIT	3
WING STRUCTURE	4
WING STRUCTURE	5
WING STRUCTURE	5A
WING STRUCTURE-EXTENDED RANGE	6
WING STRUCTURE-EXTENDED RANGE	6A
WING STRUT	16
WING STRUT FAIRING	16
WING STRUT FITTING	16
WING TIP	3A
WING TIP	4
WING TIP	6
WING TIP	5
WINTERIZATION EQUIPMENT	86
WIRE CUTTER & DEFLECTOR INSTL	70A
WIRE-HEADLINER	53

PARTS LISTING

FIGURE AND INDEX NO.	PART NUMBER	DESCRIPTION 1 2 3 4 5 6 7		UNITS PER ASSY	USABLE ON CODE
1 -		MISCELLANEOUS BULK ITEMS ----------		AR	
- 1	C1C2	CONLEY-WELD EPOXY BASE ADHESIVE.	CEMENTING ---------- PLASTIC TO PLASTIC PLASTIC TO METAL FIBERGLASS TO FIBERGLASS FIBERGLASS TO METAL METAL TO METAL		
- 2	EC880	ADHESIVE-SYNTHETIC RUBBER BASE OIL RESISTANT	CEMENTING ---------- RUBBER TO METAL SOUNDPROOFING TO METAL UPHOLSTERY TO METAL		
- 3	1024A-B	CEMENT PARTS A & B	CEMENTING DE-ICER ---------- AND ABRASION BOOTS TO WING AND STAB- ILIZER LEADING EDGES.		
- 4	1007	PRIMER	USED ONLY FOR PRIMING ------- AREAS WHERE DE-ICER AND ABRASION BOOTS ARE TO BE INSTALLED WITH 1024A-B.		
- 5	576.1	SEALANT-EXTRUDED PERMAGUM	WEATHER SEALING ---------- OF WINDSHIELD OR CABIN.		
- 6	579.6	SEALANT-EXTRUDED ZINC CHROMATE	WEATHER SEALING ---------- OF WINDSHIELD OR CABIN.		
- 7	S1078-1	SEALANT-SYNTHETIC RUBBER-FABRIC REINFORCED .06 THICK .50 WIDE	WINDSHIELD SEALING ----------		
- 8	S1078-2	SEALANT-SYNTHETIC RUBBER-FABRIC REINFORCED .12 THICK .50 WIDE	WINDSHIELD SEALING ----------		
- 9	S1078-3	SEALANT-SYNTHETIC RUBBER-FABRIC REINFORCED 2 MIL MYLAR TAPE BACKING. .06 THICK 1.50 WIDE	WINDSHIELD SEALING ----------		
-10	EC1239AB	SEALANT-CATALYTIC	GENERAL PURPOSE ---------- FOR FAYING SURFACES- FILLET & RIVET SEALS- FUEL SEALING AND AREAS WHERE SKYDROL IS PRESENT		
-11	700	SEALANT-FIREWALL	SEALING FIREWALL JOINTS ----- AND OPENINGS. WITHSTANDS 2000 DEGREE TEMP FOR 5 MINUTES.		
-12	EC776	ADHESIVE-GASKET FUEL RESISTANT SYNTHETIC RUBBER BASE.	CEMENTING GASKETS ----------		
-13	550	SOUND DEADENER- LIQUID VIBRATION DAMPENER	VIBRATION DAMPENING --------- CAN BE BRUSHED OR SPRAYED.		
-14	MIL-P-8585	PRIMER-ZINC CHROMATE- GREEN	CORROSION PROOFING ----------		

CONTINUED ON NEXT PAGE

FIGURE AND INDEX NO.	PART NUMBER	DESCRIPTION 1 2 3 4 5 6 7	UNITS PER ASSY	USABLE ON CODE
1 -14A	EC1675A-B	SEALANT-CATALYTIC HOPPER ADAPTER TO ---------- HOPPER-CANTILEVER WING FUEL BAY		
-14B	PR0890	SEALANT-CATALYTIC ALTERNATE FOR EC1675A-B HOPPER ADAPTER TO ---------- HOPPER-CANTILEVER WING FUEL BAY		
-14C	LOCTITE5381	EPOXY MIXER CUP URETHANE TO URETHANE -------- URETHANE TO METAL POLYCARBONATE TO METAL ABS TO METAL	AR	
-14D	EC2216A-B	ADHESIVE PARTS A&B METAL TO METAL ----------	AR	
-14E	LOCTITE87	LOCKING & RETAINING COMPOUND METAL TO METAL ----------	AR	
-15	S51-4	HOSE-FUEL & OIL-1/4 ID AVAILABLE BY THE FOOT ----------	AR	
	S51-6	HOSE-FUEL & OIL-3/8 ID AVAILABLE BY THE FOOT ----------	AR	
	S51-8	HOSE-FUEL & OIL-1/2 ID AVAILABLE BY THE FOOT ----------	AR	
	S51-10	HOSE-FUEL & OIL-5/8 ID AVAILABLE BY THE FOOT ----------	AR	
	S51-12	HOSE-FUEL & OIL-3/4 ID AVAILABLE BY THE FOOT ----------	AR	
	S51-16	HOSE-FUEL & OIL-1.00 ID AVAILABLE BY THE FOOT ----------	AR	
	S51-32	HOSE-FUEL & OIL-2.00 ID AVAILABLE BY THE FOOT ----------	AR	
-16	S202RB	CHANNEL-EXTRUDED BLACK AVAILABLE BY THE FOOT --------	AR	
	S202VW	CHANNEL-EXTRUDED WHITE AVAILABLE BY THE FOOT --------	AR	
-17	S292-1	INSULATION SLEEVING-ELEC-.118 ID AVAILABLE BY THE FOOT --	AR	
	S292-2	INSULATION SLEEVING-ELEC-.133 ID AVAILABLE BY THE FOOT --	AR	
	S292-3	INSULATION SLEEVING-ELEC-.148 ID AVAILABLE BY THE FOOT --	AR	
	S292-4	INSULATION SLEEVING-ELEC-.166 ID AVAILABLE BY THE FOOT --	AR	
	S292-5	INSULATION SLEEVING-ELEC-.186 ID AVAILABLE BY THE FOOT --	AR	
	S292-6	INSULATION SLEEVING-ELEC-.208 ID AVAILABLE BY THE FOOT --	AR	
	S292-8	INSULATION SLEEVING-ELEC-.263 ID AVAILABLE BY THE FOOT --	AR	
	S292-11	INSULATION SLEEVING-ELEC-5/16 ID AVAILABLE BY THE FOOT --	AR	
	S292-12	INSULATION SLEEVING-ELEC-3/8 ID AVAILABLE BY THE FOOT ---	AR	
	S292-14	INSULATION SLEEVING-ELEC-1/2 ID AVAILABLE BY THE FOOT ---	AR	
	S292-16	INSULATION SLEEVING-ELEC-3/4 ID AVAILABLE BY THE FOOT ---	AR	
	S292-28	INSULATION SLEEVING-ELEC-2-1/2 ID AVAILABLE BY THE FOOT -	AR	
-18	S10268G	CLAMP-WRAP TYPE AVAILABLE IN 100 FOOT ROLL ----------	AR	
-19	S1053E7T	DUCT-FLEXIBLE-NEOPRENE IMPREGNATED 7/8 DIA ---------- AVAILABLE IN 10 FOOT LENGTHS ONLY	AR	
	S1053E8T	DUCT-FLEXIBLE-NEOPRENE IMPREGNATED 1.00 DIA ---------- AVAILABLE IN 10 FOOT LENGTHS ONLY	AR	
	S1053E10T	DUCT-FLEXIBLE-NEOPRENE IMPREGNATED 1-1/4 DIA ----------	AR	
	S1053K10T	DUCT-FLEXIBLE-SILICONE IMPREGNATED 1-1/4 DIA ---------- AVAILABLE IN 10 FOOT LENGTHS ONLY	AR	
	S1053E12T	DUCT-FLEXIBLE-NEOPRENE IMPREGNATED 1-1 1/2 DIA ----------	AR	
	S1053K12T	DUCT-FLEXIBLE-SILICONE IMPREGNATED 1-1/2 DIA ---------- AVAILABLE IN 10 FOOT LENGTHS ONLY	AR	
	S1053E20T	DUCT-FLEXIBLE-NEOPRENE IMPREGNATED 2-1/2 DIA ----------	AR	
	S1053K20T	DUCT-FLEXIBLE-SILICONE IMPREGNATED 2-1/2 DIA ---------- AVAILABLE IN 10 FOOT LENGTHS ONLY	AR	
	S1053E24T	DUCT-FLEXIBLE-NEOPRENE IMPREGNATED 3.00 DIA ----------	AR	
	S1053K24T	DUCT-FLEXIBLE-SILICONE IMPREGNATED 3.00 DIA ----------	AR	
	S1053K24W	DUCT-FLEXIBLE-SILICONE IMPREGNATED 2 PLY 3.00 DIA --- AVAILABLE IN 10 FOOT LENGTHS ONLY	AR	
	S1053E28T	DUCT-FLEXIBLE-NEOPRENE IMPREGNATED 3-1/2 DIA ----------	AR	
	S1053K28W	DUCT-FLEXIBLE-SILICONE IMPREGNATED 2 PLY 3-1/2 DIA -- AVAILABLE IN 10 FOOT LENGTHS ONLY	AR	
	S1053E32T	DUCT-FLEXIBLE-NEOPRENE IMPREGNATED 4.00 DIA ----------	AR	
	S1053K32T	DUCT-FLEXIBLE-SILICONE IMPREGNATED 4.00 DIA ---------- AVAILABLE IN 10 FOOT LENGTHS ONLY	AR	
-20	S1047-1	SEAL-SPONGE RUBBER-1/4 THICK AVAILABLE BY THE FOOT ------	AR	
	S1047-2	SEAL-SPONGE RUBBER-5/16 THICK AVAILABLE BY THE FOOT -----	AR	
-21	S1055-1	CHANNEL-EXTRUDED RUBBER AVAILABLE BY THE FOOT ----------	AR	
-22	S1071-1	TUBE-POLYETHYLENE-1/4 DIA AVAILABLE BY THE FOOT ---------	AR	
	S1071-3	TUBE-POLYETHYLENE-3/8 DIA AVAILABLE BY THE FOOT ---------	AR	
	S1071-4	TUBE-POLYETHYLENE-1/2 DIA AVAILABLE BY THE FOOT ---------	AR	
	S1071-5	TUBE-POLYETHYLENE-5/8 DIA AVAILABLE BY THE FOOT ---------	AR	

CONTINUED ON NEXT PAGE

Bulk Items

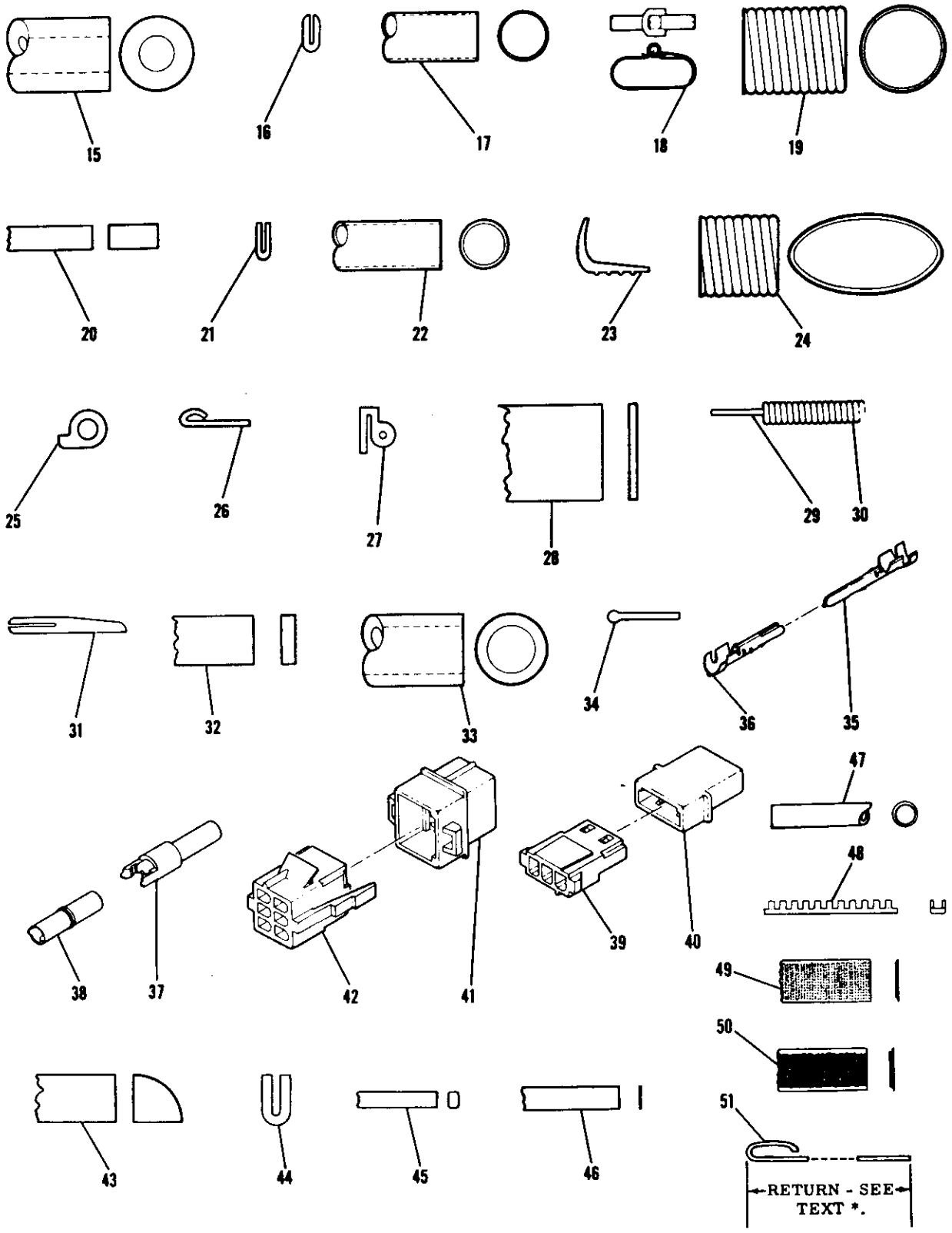

Figure 1. Miscellaneous Bulk Items

FIGURE AND INDEX NO.	PART NUMBER	DESCRIPTION 1 2 3 4 5 6 7	UNITS PER ASSY	USABLE ON CODE
1 -23	S1084-1	SEAL-EXTRUDED RUBBER AVAILABLE BY THE FOOT	AR	
-24	S1110ET	DUCT-OVAL-FLEXIBLE-NEOPRENE IMPREGNATED AVAILABLE IN 10 FOOT LENGTHS ONLY	AR	
-25	S1346-1	SEAL-SPONGE RUBBER AVAILABLE IN 12 FT LENGTHS ONLY	AR	
-26	S1366-1	MOULDING-EXTRUDED PLASTIC-SAND AVAILABLE BY THE FOOT	AR	
	S1366-2	MOULDING-EXTRUDED PLASTIC-FAWN AVAILABLE BY THE FOOT	AR	
	S1366-3	MOULDING-EXTRUDED PLASTIC-BLACK AVAILABLE BY THE FOOT	AR	
-27	S1378-1	SEAL-SPONGE RUBBER-BEIGE AVAILABLE IN 7 FT LENGTHS ONLY	AR	
	S1378-2	SEAL-SPONGE RUBBER-CLOUD GRAY AVAILABLE IN 7 FT LENGTHS ONLY	AR	
-28	S1389-1	SEALER STRIP-FELT-1.00 WIDE AVAILABLE BY THE FOOT	AR	
	S1389-2	SEALER STRIP-FELT-1-1/2 WIDE AVAILABLE BY THE FOOT	AR	
	S1389-3	SEALER STRIP-FELT-2.00 WIDE AVAILABLE BY THE FOOT	AR	
	S1389-4	SEALER STRIP-FELT-1-3/4 WIDE AVAILABLE BY THE FOOT	AR	
	S1389-5	SEALER STRIP-FELT-1-1/4 WIDE AVAILABLE BY THE FOOT	AR	
	S1389-6	SEALER STRIP-FELT-2-1/4 WIDE AVAILABLE BY THE FOOT	AR	
	S1389-7	SEALER STRIP-FELT-1-3/8 WIDE AVAILABLE BY THE FOOT	AR	
-29	S1398-1	CONTROL-PUSH PULL-WIRE AVAILABLE BY THE FOOT	AR	
-30	S1398-2	CONTROL-PUSH PULL-CASING AVAILABLE BY THE FOOT	AR	
-31	S1415-1	MOULDING-EXTRUDED VINYL	AR	
-32	S1441-1	SEAL-SPONGE RUBBER-3/8 WIDE AVAILABLE BY THE FOOT	AR	
	S1441-2	SEAL-SPONGE RUBBER-1/4 WIDE AVAILABLE BY THE FOOT	AR	
	S1441-3	SEAL-SPONGE RUBBER-1/2 WIDE AVAILABLE BY THE FOOT	AR	
-33	S1495-4	HOSE-RUBBER-1/4 ID AVAILABLE BY THE FOOT	AR	
	S1495-6	HOSE-RUBBER-3/8 ID AVAILABLE BY THE FOOT	AR	
	S1495-8	HOSE-RUBBER-1/2 ID AVAILABLE BY THE FOOT	AR	
	S1495-10	HOSE-RUBBER-5/8 ID AVAILABLE BY THE FOOT	AR	
-34	S1611-1	SEAL-EXTRUDED VINYL AVAILABLE BY THE FOOT	AR	
-35	S1635-1	ELECTRICAL PIN WIRE SIZE 22-18	AR	
	S1635-2	ELECTRICAL PIN WIRE SIZE 18-14	AR	
	S1635-3	ELECTRICAL PIN WIRE SIZE 18 GA-2 WIRE	AR	
-36	S1636-1	ELECTRICAL SOCKET WIRE SIZE 22-18	AR	
	S1636-2	ELECTRICAL SOCKET WIRE SIZE 18-14	AR	
	S1636-3	ELECTRICAL SOCKET WIRE SIZE 18 GA-2 WIRE	AR	
-37	S1637-1	HOUSING-ELECTRICAL PIN	AR	
-38	S1637-2	HOUSING-ELECTRICAL SOCKET	AR	
-39	S1638-1	HOUSING-ELECTRICAL SOCKET-3 CIRCUIT	AR	
-40	S1638-2	HOUSING-ELECTRICAL PIN-3 CIRCUIT	AR	
-41	S1640-6	HOUSING-ELECTRICAL PIN-6 CAVITY	AR	
	S1640-9	HOUSING-ELECTRICAL PIN-9 CAVITY	AR	
	S1640-12	HOUSING-ELECTRICAL PIN-12 CAVITY	AR	
	S1640-15	HOUSING-ELECTRICAL PIN-15 CAVITY	AR	
-42	S1641-6	HOUSING-ELECTRICAL SOCKET-6 CAVITY	AR	
	S1641-9	HOUSING-ELECTRICAL SOCKET-9 CAVITY	AR	
	S1641-12	HOUSING-ELECTRICAL SOCKET-12 CAVITY	AR	
	S1641-15	HOUSING-ELECTRICAL SOCKET-15 CAVITY	AR	
-43	S1116	SEAL-NEOPRENE AVAILABLE IN 12 FOOT LENGTHS ONLY	AR	
-44	S1356	SEAL-EXTRUDED RUBBER AVAILABLE BY THE FOOT	AR	
-45	S1614	LACING-KOROSEAL AVAILABLE BY THE FOOT	AR	
-46	3690-1/8	FILM-BLACK VINYL-1/8 IN WIDE AVAILABLE BY THE ROLL	AR	
	3690-1/4	FILM-BLACK VINYL-1/4 IN WIDE AVAILABLE BY THE ROLL	AR	
	3690-1/2	FILM-BLACK VINYL-1/2 IN WIDE AVAILABLE BY THE ROLL	AR	
-47	110691	WIRE-TEFLON AVAILABLE BY THE FOOT	AR	
-48	S1050-1	GROMMET-CATERPILLAR .056 WIDE	AR	
	S1050-2	GROMMET-CATERPILLAR .090 WIDE	AR	
	S1050-3	GROMMET-CATERPILLAR .131 WIDE	AR	
-49	S2092-3	FABRIC FASTENER-HOOK AVAILABLE BY THE FOOT	AR	
-50	S2092-4	FABRIC FASTENER-PILE AVAILABLE BY THE FOOT	AR	
-51	S1948-2-1 *	TRIM-EXTRUDED CLOUD GRAY AVAILABLE BY THE FOOT	AR	
	S1948-2-2 *	TRIM-EXTRUDED EBONY AVAILABLE BY THE FOOT	AR	
	S1948-2-3 *	TRIM-EXTRUDED SILVER TEAL BLUE AVAILABLE BY THE FOOT	AR	
	S1948-2-4 *	TRIM-EXTRUDED MARIGOLD AVAILABLE BY THE FOOT	AR	
	S1948-2-5 *	TRIM-EXTRUDED SUN GOLD AVAILABLE BY THE FOOT	AR	
	S1948-2-6 *	TRIM-EXTRUDED LIGHT OLIVE AVAILABLE BY THE FOOT	AR	
	S1948-2-7 *	TRIM-EXTRUDED CLOVE BROWN AVAILABLE BY THE FOOT	AR	

CONTINUED ON NEXT PAGE

FIGURE AND INDEX NO.	PART NUMBER	DESCRIPTION 1 2 3 4 5 6 7	UNITS PER ASSY	USABLE ON CODE
1 -	S1948-2-8 *	TRIM-EXTRUDED HOLIDAY BLUE AVAILABLE BY THE FOOT ----	AR	
	S1948-2-9 *	TRIM-EXTRUDED FIESTA RED AVAILABLE BY THE FOOT ------	AR	
	S1948-2-10 *	TRIM-EXTRUDED PICNIC GREEN AVAILABLE BY THE FOOT ----	AR	
	S1948-2-11 *	TRIM-EXTRUDED BOGOTA BLUE AVAILABLE BY THE FOOT -----	AR	
	S1948-2-12 *	TRIM-EXTRUDED TAHITIAN RED AVAILABLE BY THE FOOT ----	AR	
	S1948-2-13 *	TRIM-EXTRUDED CYPRUS GREEN AVAILABLE BY THE FOOT ----	AR	
	S1948-2-14 *	TRIM-EXTRUDED PEACOCK BLUE AVAILABLE BY THE FOOT ----	AR	
	S1948-2-15 *	TRIM-EXTRUDED POPPY RED AVAILABLE BY THE FOOT -------	AR	
	S1948-2-16 *	TRIM-EXTRUDED GOLDEN OLIVE & OLIVE GREEN ---------- AVAILABLE BY THE FOOT	AR	
	S1948-2-17 *	TRIM-EXTRUDED SUNSET RED AVAILABLE BY THE FOOT ------	AR	
	S1948-2-18 *	TRIM-EXTRUDED COPEN BLUE AVAILABLE BY THE FOOT ------	AR	
	S1948-2-19 *	TRIM-EXTRUDED CHESTNUT BROWN AVAILABLE BY THE FOOT --	AR	
	S1948-2-20 *	TRIM-EXTRUDED OLD GOLD AVAILABLE BY THE FOOT --------	AR	

NOTE. *PART NUMBER LISTED IN TEXT HAS A 1/2 INCH RETURN. FOR A 7/8 INCH RETURN CHANGE FIRST DASH NUMBER TO -1. EXAMPLE-S1948-1-4.

Placards

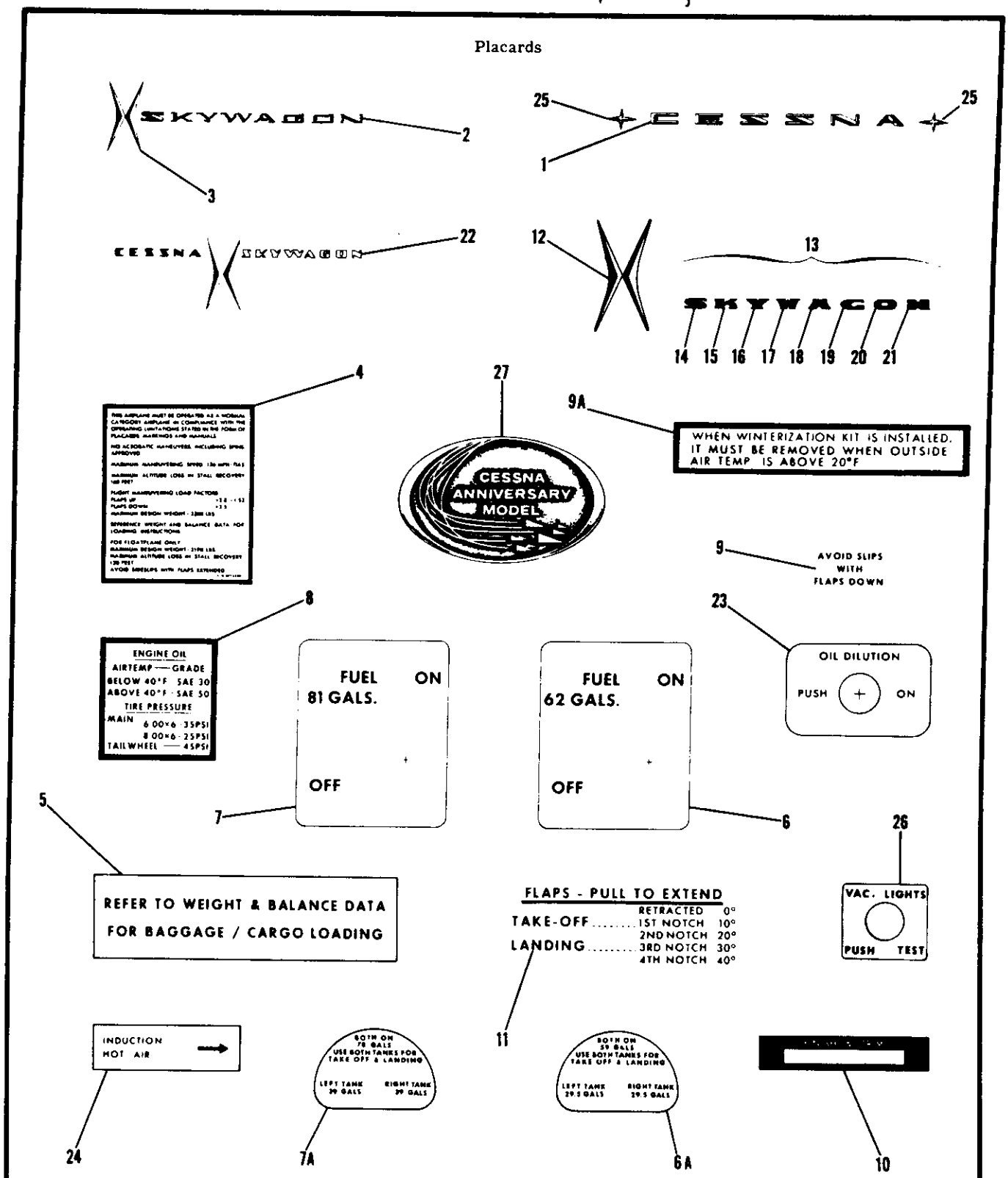

SERIAL 185-0001 THRU 185-1447

Figure 2. (Sheet 1 of 2) Placards, Nameplates & Exterior Markings

FIGURE AND INDEX NO.	PART NUMBER	DESCRIPTION 1 2 3 4 5 6 7	UNITS PER ASSY	USABLE ON CODE
2 -		PLACARDS, NAMEPLATES & EXTERIOR MARKINGS	NP	E
- 1	0500085-1	INSIGNIA CESSNA ON FUSELAGE	2	G
- 2	0700061-1	PLACARD SKYWAGON ON VERTICAL FIN	2	G
- 3	0700061-2	PLACARD EMBLEM ON VERTICAL FIN	2	A
- 4	0713228-2	PLACARD-OPERATIONAL LIMITATIONS	1	U
	0700167-3	PLACARD-OPERATIONAL LIMITATIONS	1	W
	1205001-56	PLACARD-OPERATIONAL LIMITATIONS	1	AA
	1205001-59	PLACARD-OPERATIONAL LIMITATIONS	1	AB
- 5	0713224-1	PLACARD-BAGGAGE LOAD LIMIT WHEN EXHAUSTED USE 1205015-1	1	
- 6	0716106-1	PLACARD-FUEL SELECTION 62 GALLONS	1	J
- 6A	0716113-1	PLACARD-FUEL VALVE	1	D
- 7	0716106-2	PLACARD-FUEL SELECTION 81 GALLONS	1	J
- 7A	0716113-2	PLACARD-FUEL VALVE	1	D
- 8	0713210-16	PLACARD-TIRE & OIL PRESSURE	1	K
- 9	0510188	PLACARD-FLAP LEVER USED ON FLOATPLANE & AMPHIBIAN	1	
- 9A	0700319-13	PLACARD-WINTERIZATION	1	
-10	0713047	PLACARD-FINISH & TRIM	1	
-11	0510191	PLACARD-FLAP INSTRUCTIONS WHEN EXHAUSTED USE 0705004-1	1	
-12	0700064-1	PLACARD-EMBLEM ON GLOVE BOX DOOR	1	K
-13	0513220-14	LETTERING-SKYWAGON ON GLOVE BOX DOOR	1	K
-14	0513220-2	INITIAL S	1	
-15	0513220-3	INITIAL K	1	
-16	0513220-4	INITIAL Y	1	
-17	0513220-9	INITIAL W	1	
-18	0513220-6	INITIAL A	1	
-19	0513220-11	INITIAL G	1	
-20	0513220-12	INITIAL O	1	
-21	0513220-13	INITIAL N	1	
-22	0700065-1	EMBLEM-CONTROL WHEEL	1	G
-23	0713222-1	PLACARD-OIL DILUTION	1	K
-24	0713176-1	PLACARD-HOT AIR INDUCTION	1	G
-25	0500085-2	EMBLEM-STAR	2	B
-26	0713705-4	PLACARD-VACUUM LIGHTS PUSH TO TEST	1	B
-27	0713724-1	MEDALLION-CESSNA ANNIVERSARY MODEL	1	C

CONTINUED ON NEXT PAGE

Placards (Cont)

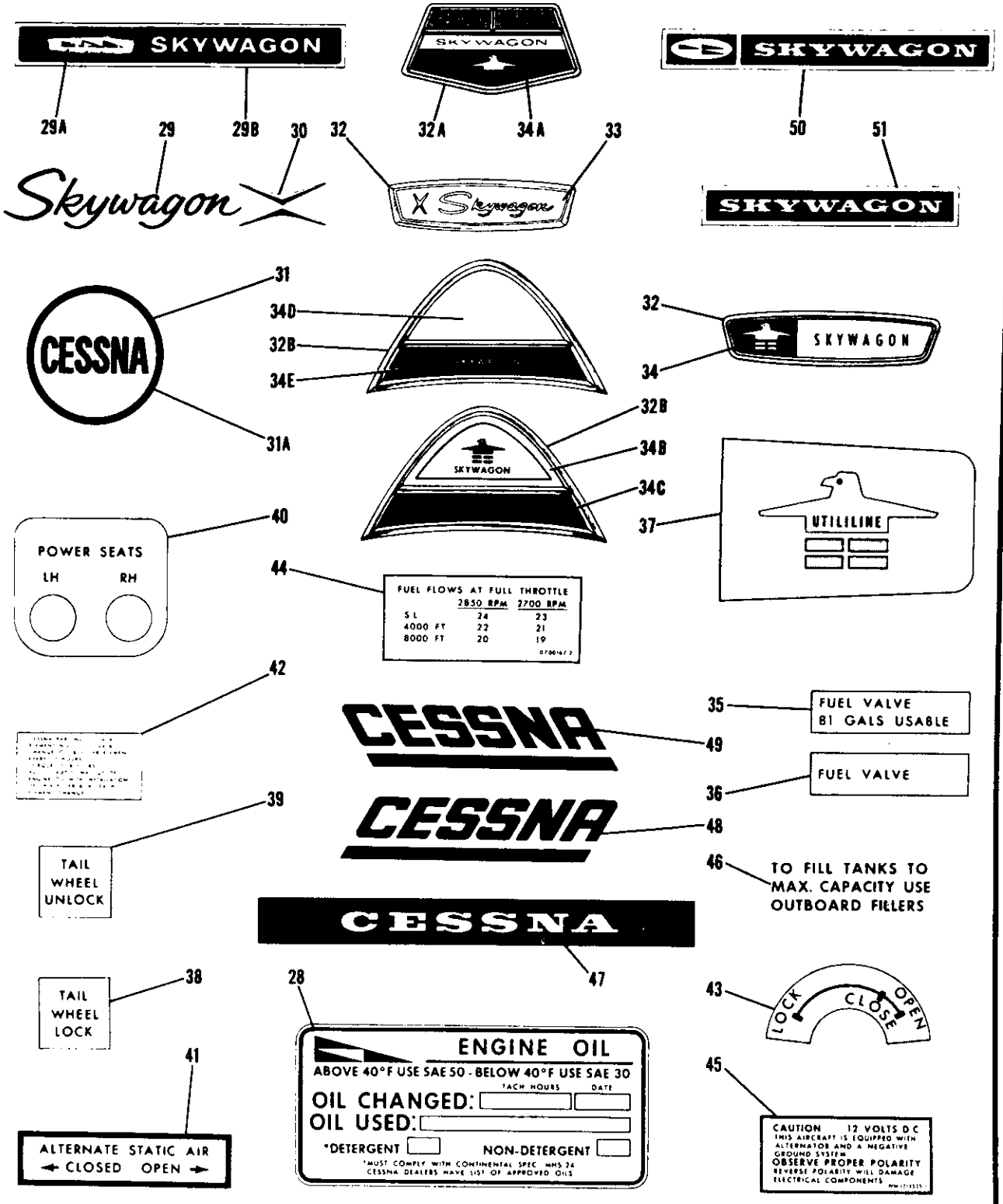

SERIAL 185-0001 THRU 185-1447

Figure 2. (Sheet 2 of 2) Placards, Nameplates & Exterior Markings

FIGURE AND INDEX NO.	PART NUMBER	DESCRIPTION 1 2 3 4 5 6 7	UNITS PER ASSY	USABLE ON CODE
2 -28	S1397-1	PLACARD-ENGINE OIL	1	Z
	S1397-4	PLACARD-ENGINE OIL	1	X
-29	1200661-2	LETTERING SKYWAGON	2	M
	0700721-1	PLACARD	2	L
-29A	0700752-1	PLACARD	2	W
-29B	0500125-1	PLATE	2	W
	0700748-1	PLACARD	2	W
-30	0700061-2	PLACARD EMBLEM	2	M
-31	1400014-1	NAMEPLATE CESSNA	2	M
-31A	0400135-1	NAMEPLATE-CESSNA	2	W
-32	0500125-1	PLATE-CONTROL WHEEL INSIGNIA	1	F
-32A	0500125-44	PLATE-CONTROL WHEEL INSIGNIA	1	W
-32B	0700742-1	PLATE-CONTROL WHEEL INSIGNIA	1	X
-33	0500125-11	INSIGNIA-CONTROL WHEEL	1	M
-34	0700153-1	INSIGNIA-CONTROL WHEEL	1	L
-34A	0700740-1	INSIGNIA-CONTROL WHEEL	1	W
-34B	0700175-1	PLACARD-CONTROL WHEEL	1	AC
-34C	0700745-1	EMBLEM-CONTROL WHEEL	1	AC
-34D	0700197-1	PLACARD-CONTROL WHEEL	1	AD
-34E	0713255-8	EMBLEM-CONTROL WHEEL	1	AD
-35	0716112-1	PLACARD-FUEL	1	P
	0716135-1	PLACARD-FUEL	1	AE
-36	0716112-2	PLACARD-FUEL	1	P
-37	0700152-1	PLACARD-LH	1	L
	0700152-2	PLACARD-RH	1	L
	1200713-1	PLACARD	2	W
-38	0713190-1	PLACARD-TAILWHEEL LOCK	1	H
-39	0713190-2	PLACARD-TAILWHEEL LOCK	1	H
-40	0700143-1	PLACARD-POWER SEATS	1	N
-41	1200678-2	PLACARD-ALTERNATE STATIC SOURCE WHEN EXHAUSTED USE 0505005-1	1	S
-42	1250410-3	PLACARD-OIL FILTER	1	T
-43	0700166-1	PLACARD-DOOR HANDLE LH	1	S
	0700166-2	PLACARD-DOOR HANDLE RH	1	S
-44	0700167-2	PLACARD-FUEL FLOW WHEN EXHAUSTED USE 0705005-1	1	V
-45	1213535-1	PLACARD-BATTERY BOX WHEN EXHAUSTED USE 1205024-1	1	X
-46	0721205-1	PLACARD-WING	2	Y
-47	0500248-1	NAMEPLATE	2	Q
-48	1205010-1	NAMEPLATE-LH CESSNA	1	AD
-49	1205010-2	NAMEPLATE-RH CESSNA	1	AD
-50	0700173-1	PLACARD	2	AC
-51	1205013-6	PLACARD	2	AD
	S1500	STENCILS-SLANT LETTERS & NUMERALS SEE SHT 1 & 2 FIG 28	AR	
	S1600	STENCILS-VERTICAL LETTERS & NUMERALS SEE SHEETS 1 & 2 FIG 28	AR	
		A---SERIAL 185-0001 THRU 185-0237		
		B---SERIAL 185-0238 THRU 185-0653		
		C---SERIAL 185-0238 THRU 185-0517		
		D---SERIAL 185-0513 THRU 185-1447		
		E---SERIAL 185-0001 THRU 185-1447		
		F---SERIAL 185-0654 THRU 185-1447		
		G---SERIAL 185-0001 THRU 185-0653		
		H---SERIAL 185-0577 THRU 185-0655		
		J---SERIAL 185-0001 THRU 185-0414		
		K---SERIAL 185-0001 THRU 185-0776		
		L---SERIAL 185-0777 THRU 185-0967		
		M---SERIAL 185-0654 THRU 185-0776		
		N---SERIAL 185-0001 THRU 185-0512		
		P---SERIAL 185-0513 THRU 185-0776		
		Q---SERIAL 185-0777 THRU 185-0967, 185-1150 THRU 185-1300		
		R---SERIAL 185-0415 THRU 185-0776		
		S---SERIAL 185-0968 THRU 185-1447		
		T---SERIAL 185-0932 THRU 185-1447		
		U---SERIAL 185-0001 THRU 185-0967		
		V---SERIAL 185-0968 THRU 185-1447 300 HP ONLY		
		W---SERIAL 185-0968 THRU 185-1149		
		X---SERIAL 185-1150 THRU 185-1447		
		Y---SERIAL 185-0986 THRU 185-1447		
		Z---SERIAL 185-0513 THRU 185-1149		
		AA---SERIAL 185-1150 THRU 185-1242		
		AB---SERIAL 185-1243 THRU 185-1447		
		AC---SERIAL 185-1150 THRU 185-1300		
		AD---SERIAL 185-1301 THRU 185-1447		
		AE---SERIAL 185-0777 THRU 185-1447		

Placards

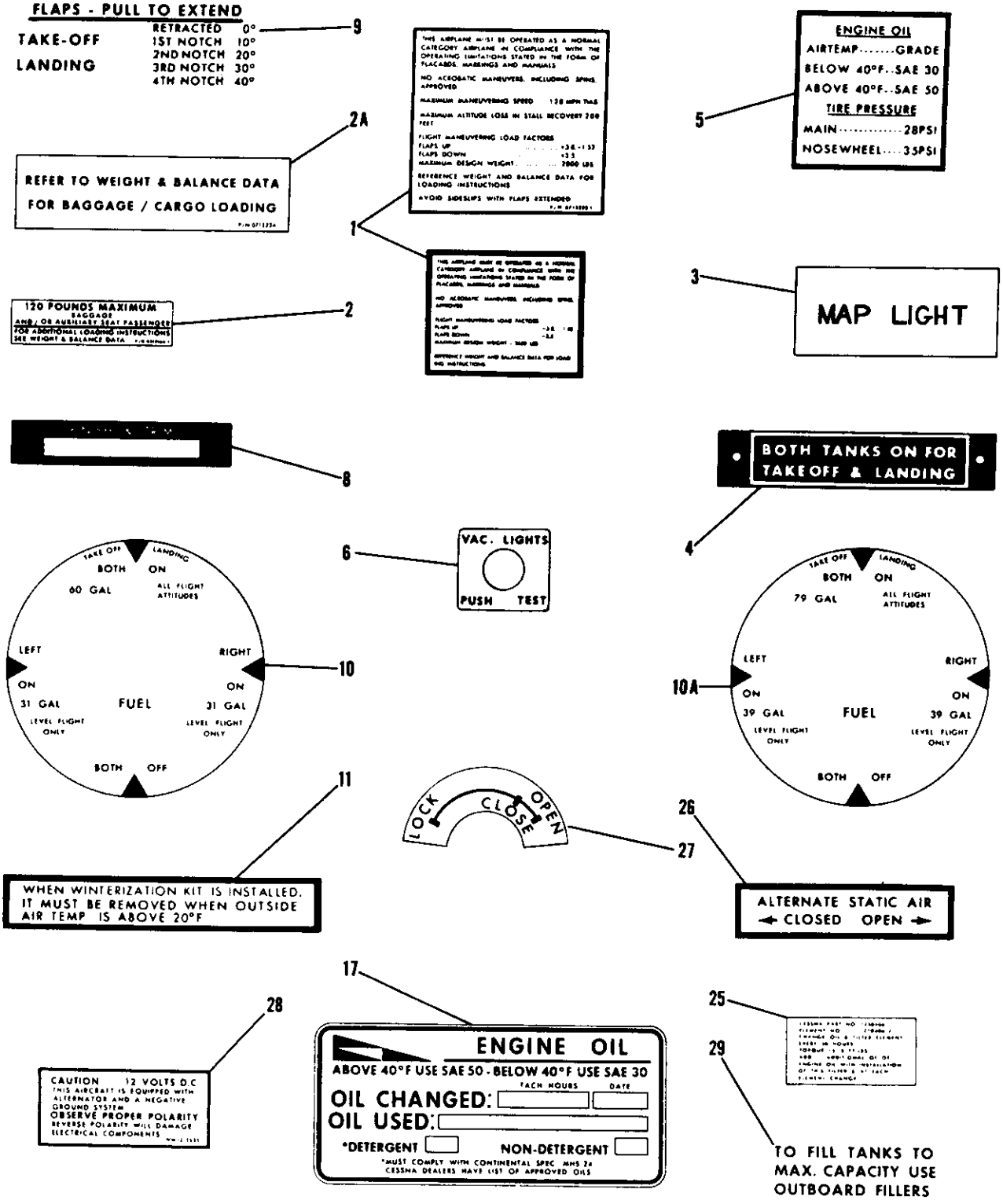

SERIAL 18051184 THRU 18051993

Figure 2A. (Sheet 1 of 2) Placards, Nameplates & Exterior Markings

Placards (Cont)

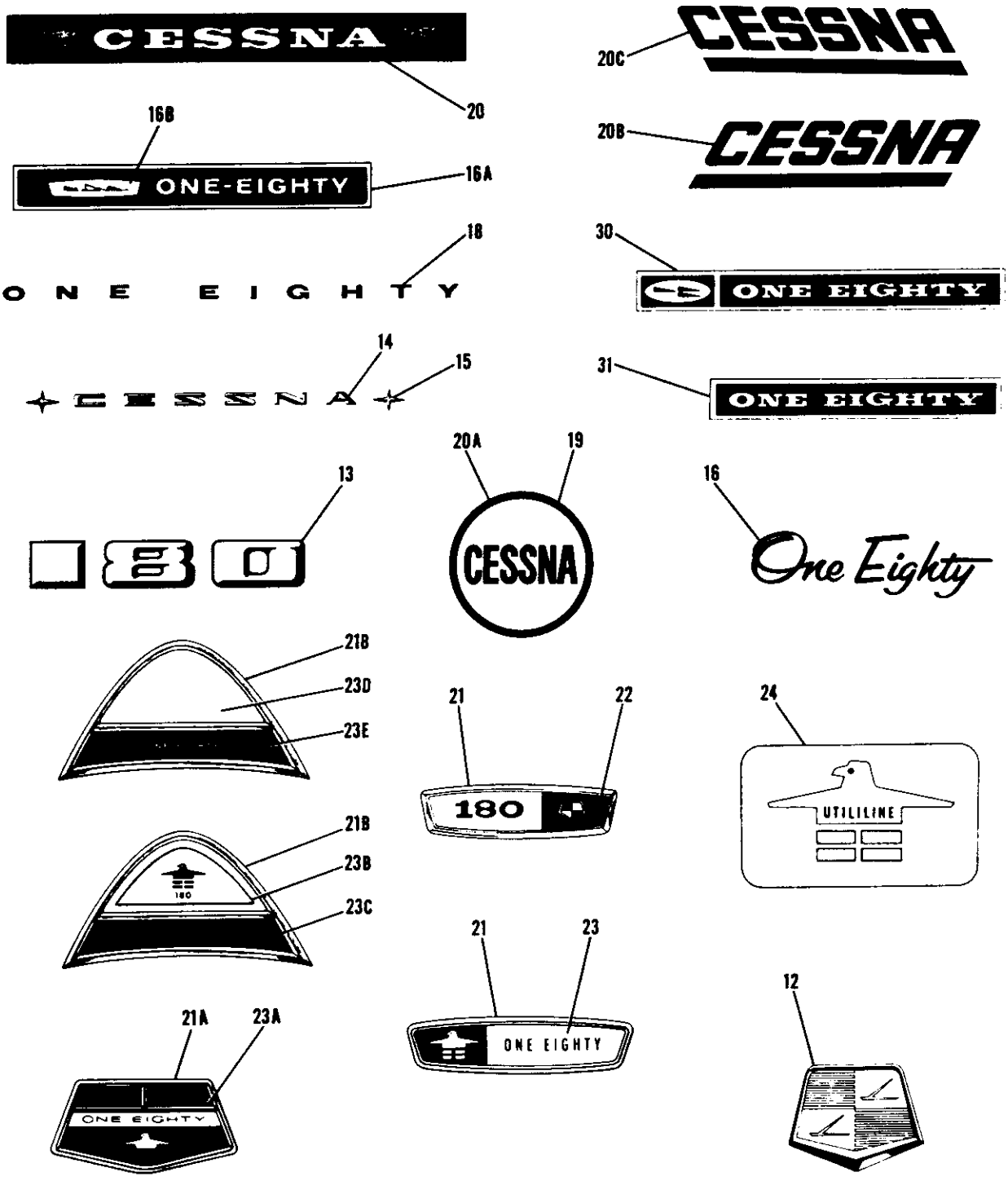

SERIAL 18051184 THRU 18051993

Figure 2A. (Sheet 2 of 2) Placards, Nameplates & Exterior Markings

FIGURE AND INDEX NO.	PART NUMBER	DESCRIPTION 1 2 3 4 5 6 7	UNITS PER ASSY	USABLE ON CODE
2A-		PLACARDS, NAMEPLATES & EXTERIOR MARKINGS ----------	NP	A
- 1	0713207-1	PLACARD-OPERATIONAL LIMITATIONS ----------	1	B
	0713233-1	PLACARD-OPERATIONAL LIMITATIONS WEU 1205001-200 OR -201 -	1	R
	S1656-6	PLACARD-OPERATIONAL LIMITATIONS WEU 1205001-200 OR -201 -	1	Q
	1205001-201	PLACARD-OPERATIONAL LIMITATIONS DAY NIGHT VFR ONLY ------	1	C
	1205001-200	PLACARD-OPERATIONAL LIMITATIONS DAY NIGHT VFR & IFR -----	1	C
- 2	0512166-3	PLACARD-BAGGAGE & OR AUXILIARY PASSENGER ----------	1	B
- 2A	0713224-1	PLACARD-BAGGAGE LOAD LIMITS WHEN EXHAUSTED USE 1205015-1-	1	C
- 3	0713210-4	PLACARD-MAP LIGHT ----------	1	S
- 4	0511168	PLACARD-FUEL SELECTOR BOTH TANKS ON ----------	1	
- 5	0713210-11	PLACARD-TIRE & OIL PRESSURE ----------	1	B
- 6	0713705-4	PLACARD-VACUUM LIGHTS TEST ----------	1	
- 7		DELETED, NOT AVAILABLE ----------		
- 8	0713047	PLACARD-FINISH & TRIM ----------	1	
- 9	0510191	PLACARD-FLAP INSTRUCTIONS WHEN EXHAUSTED USE 0705004-1 --	1	
-10	S1286-3	PLATE ASSEMBLY-FUEL SELECTOR 60 GAL BLACK ----------	1	
	S1286-1	PLATE ASSEMBLY-FUEL SELECTOR 60 GAL BROWN ----------	1	
-10A	S1286-4	PLATE ASSEMBLY-FUEL SELECTOR 79 GAL BLACK ----------	1	
	S1286-2	PLATE ASSEMBLY-FUEL SELECTOR 79 GAL BROWN ----------	1	
-11	0700319-13	PLACARD-WINTERIZATION ----------	1	

CONTINUED ON NEXT PAGE

FIGURE AND INDEX NO.	PART NUMBER	DESCRIPTION 1 2 3 4 5 6 7	UNITS PER ASSY	USABLE ON CODE
2A-12	0700053-1	PLACARD-TAIL & FUSELAGE	2	B
	0700029-1	INSIGNIA	2	D
-13	0500091-5	PLACARD-180	2	B
-14	0500085-1	NAMEPLATE-CESSNA	2	B
-15	0500085-2	PLACARD-STAR	4	B
-16	0700720-1	PLACARD	1	E
-16A	0700750-1	PLACARD	2	J
-16B	0500125-1	PLATE	2	J
	0700748-1	PLACARD	2	J
-17	S1397-1	PLACARD-ENGINE OIL	1	M
	S1397-4	PLACARD-ENGINE OIL	1	K
-18	0700128-2	LETTERING ONE EIGHTY	2	D
-19	1400014-1	NAMEPLATE CESSNA	2	D
-20	0500248-1	NAMEPLATE-CESSNA	2	N
-20A	0400135-1	NAMEPLATE-CESSNA	2	J
-20B	1205010-1	NAMEPLATE-LH CESSNA	1	Q
-20C	1205010-2	NAMEPLATE-RH CESSNA	1	Q
-21	0500125-1	PLATE-CONTROL WHEEL INSIGNIA	1	F
-21A	0500125-44	PLATE-CONTROL WHEEL INSIGNIA	1	J
-21B	0700742-1	PLATE-CONTROL WHEEL INSIGNIA	1	K
-22	0500125-8	INSIGNIA-CONTROL WHEEL	1	D
-23	0700154-1	INSIGNIA-CONTROL WHEEL	1	E
-23A	0700739-1	INSIGNIA-CONTROL WHEEL	1	J
-23B	0700174-1	PLACARD-CONTROL WHEEL	1	P
-23C	0700745-1	EMBLEM-CONTROL WHEEL	1	P
-23D	0700197-1	PLACARD-CONTROL WHEEL	1	Q
-23E	0713255-5	EMBLEM-CONTROL WHEEL	1	Q
-24	0700151-1	PLACARD	2	E
	1200713-1	PLACARD	2	J
-25	1250410-3	PLACARD-OIL FILTER	1	H
-26	1200678-2	PLACARD-ALTERNATE STATIC SOURCE WHEN EXHAUSTED USE 0505005-1	1	G
-27	0700166-1	PLACARD-DOOR HANDLE LH	1	G
	0700166-2	PLACARD-DOOR HANDLE RH	1	G
-28	1213535-1	PLACARD-BATTERY BOX WHEN EXHAUSTED USE 1205024-1	1	K
-29	0721205-1	PLACARD-WING	2	L
-30	0700173-2	PLACARD	2	P
-31	1205013-4	PLACARD	2	Q
	S1500	STENCILS-SLANT LETTERS & NUMERALS SEE SHT 1 & 2 FIG 28	AR	
	S1600	STENCILS-VERTICAL LETTERS & NUMERALS SEE SHEETS 1 & 2 FIG 28	AR	

A---SERIAL 18051184 THRU 18051993
B---SERIAL 18051184 THRU 18051312
C---SERIAL 18051313 THRU 18051993
D---SERIAL 18051313 THRU 18051445
E---SERIAL 18051446 THRU 18051607
F---SERIAL 18051313 THRU 18051607
G---SERIAL 18051608 THRU 18051993
H---SERIAL 18051604 THRU 18051993
J---SERIAL 18051608 THRU 18051774
K---SERIAL 18051775 THRU 18051993
L---SERIAL 18051640 THRU 18051993
M---SERIAL 18051313 THRU 18051774
N---SERIAL 18051446 THRU 18051607, 18051775 THRU 18051875
P---SERIAL 18051775 THRU 18051875
Q---SERIAL 18051876 THRU 18051993
R---SERIAL 18051313 THRU 18051875
S---SERIAL 18051184 THRU 18051445

Placards (Cont)

ABCDEFGHIJKLMN
OPQRSTUVWXYZ
-1234567890

ABCDEFGHIJKLMN
OPQRSTUVWXYZ
-1234567890

ABCDEFGHIJKLMN
OPQRSTUVWXYZ
-1234567890

Figure 2B. (Sheet 1 of 4) Placards, Nameplates & Exterior Markings

Placards (Cont)

S1500 TYPE STENCILS *
FOR SLANT GOTHIC LETTERS & NUMERALS

LETTERS AND NUMERALS ARE AVAILABLE IN 10 INCH AND 12 INCH HEIGHTS IN EITHER LEFT HAND OR RIGHT HAND SLANT.

LETTERS AVAILABLE ARE A THRU Z.
NUMERALS AVAILABLE ARE 0 THRU 9.

TO ORDER:

EACH LETTER OR NUMERAL WANTED MUST BE ORDERED BY GIVING BASIC PART NUMBER, FOLLOWED BY HEIGHT DESIRED, FOLLOWED BY SPECIFIC LETTER OR NUMERAL AND THE DESIGNATOR L OR R TO INDICATE LEFT OR RIGHT HAND SLANT.

EXAMPLE: S1500 - 10 - M L

BASIC PART NO.
HEIGHT WANTED
LETTER WANTED
DIRECTION OF SLANT

S1600 TYPE STENCILS *
FOR VERTICAL GOTHIC LETTERS & NUMERALS

LETTERS AND NUMERALS ARE AVAILABLE IN 6 INCH, 12 INCH AND 20 INCH HEIGHTS. LETTERS AVAILABLE ARE A THRU Z. NUMERALS AVAILABLE ARE 0 THRU 9.

TO ORDER:

EACH LETTER OR NUMERAL WANTED MUST BE ORDERED BY GIVING BASIC PART NUMBER, FOLLOWED BY HEIGHT DESIRED, FOLLOWED BY SPECIFIC LETTER OR NUMERAL WANTED.

EXAMPLE: S1600 - 20 - N

BASIC PART NO.
HEIGHT WANTED
LETTER WANTED

* EACH STENCIL PROVIDES FOR EITHER BACKGROUND OR CENTER MASK.

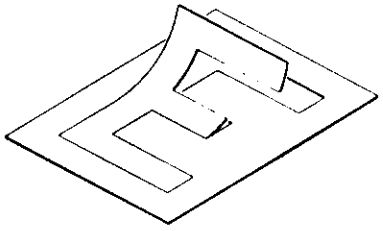

Figure 2B. (Sheet 2 of 4) Placards, Nameplates & Exterior Markings

Placards (Cont)

SERIAL 185-1448 THRU 18502310

Figure 2B. (Sheet 3 of 4) Placards, Nameplates & Exterior Markings

FIGURE AND INDEX NO.	PART NUMBER	DESCRIPTION 1 2 3 4 5 6 7	UNITS PER ASSY	USABLE ON CODE
28-		PLACARDS, NAMEPLATES & EXTERIOR MARKINGS	NP	A
- 1	0700742-1	PLATE-CONTROL WHEEL PLACARD	1	R
- 2	1205030-7	PLACARD-CONTROL WHEEL	1	B
- 2A	0705015-1	PLACARD-CONTROL WHEEL	1	C
- 2B	0705029-1	PLACARD-CONTROL WHEEL AG CARRYALL	1	Q
- 3	1205030-17	EMBLEM-CONTROL WHEEL	1	B
- 3A	0705015-3	EMBLEM-CONTROL WHEEL	1	C
- 3B	0705029-2	EMBLEM-CONTROL WHEEL AG CARRYALL	1	Q
- 4	1205001-59	PLACARD-OPERATIONAL LIMITATIONS VFR ONLY	1	R
	1205001-60	PLACARD-OPERATIONAL LIMITATIONS VFR & IFR	1	R
- 5	0700166-1	PLACARD-DOOR HANDLE LH	1	B
	0700166-2	PLACARD-DOOR HANDLE RH	1	B
- 6	1205013-15	NAMEPLATE-SKYWAGON 185	2	B
- 7	1505015-17	NAMEPLATE-SKYWAGON 185	2	C
	1505015-31	NAMEPLATE-SKYWAGON 185 REVERSE ALASKAIN AIRCRAFT	2	C
- 8	0505009-2	PLACARD-WINTERIZATION	1	
- 9	0705005-1	PLACARD-FUEL FLOW	1	R
	0705005-2	PLACARD-FUEL FLOW	1	N
-10	0705006-1	PLACARD-UTILILINE LH	1	B
	0705006-2	PLACARD UTILILINE RH	1	B
-10A	0705014-1	PLACARD UTILILINE LH	1	C
	0705014-2	PLACARD UTILILINE RH	1	C
-11	1205010-3	NAMEPLATE LH	1	B
-12	1205010-4	NAMEPLATE RH	1	B
-12A	1505014-1	NAMEPLATE-CESSNA	2	C
	1505014-2	NAMEPLATE-CESSNA REVERSE ALASKAIN AIRCRAFT	2	C
-13	0705004-1	PLACARD-FLAP INSTRUCTIONS	1	
-14	1205015-1	PLACARD-BAGGAGE LOAD LIMIT	1	
-15	1205024-1	PLACARD-BATTERY BOX	1	
-16	0505005-1	PLACARD-ALTERNATE STATIC AIR	1	K
	0705021-2	PLACARD-ALTERNATE STATIC AIR	1	F
-17	0716113-1	PLACARD-FUEL VALVE	1	
-18	0716113-2	PLACARD-FUEL VALVE	1	
-19	0713047	PLACARD-FINISH & TRIM	1	
-20	S1397-4	PLACARD-ENGINE OIL	1	
-21	1250410-3	PLACARD-OIL FILTER	1	
-22	0721205-1	PLACARD-WING	2	
-23	0510188	PLACARD-FLAP LEVER USED ON FLOATPLANE & AMPHIBIAN ONLY	1	
-24	0505020-2	PLACARD-MASTER SWITCH	1	C
-25	S1714-1	PLACARD-ALLIANCE FOR PROGRESS	1	
-26	S1713-1	PLACARD-HANDS OF FRIENDSHIP	1	
-27	0716135-1	PLACARD-FUEL	1	D
-28	0705019-1	PLACARD-FUEL 59 GAL STD RANGE TANK & SELECTOR	1	E
	0705019-2	PLACARD-FUEL 62 GAL STD RANGE TANK W/O SELECTOR	1	E
	0705019-3	PLACARD-FUEL 78 GAL EXT RANGE TANK & SELECTOR	1	E
	0705019-4	PLACARD-FUEL 81 GAL EXT RANGE TANK W/O SELECTOR	1	S
-29	C622003-0103	PLACARD-STROBE LIGHT	1	T
	C622003-0105	PLACARD-STROBE LIGHT	1	N

CONTINUED ON NEXT PAGE

Placards (Cont)

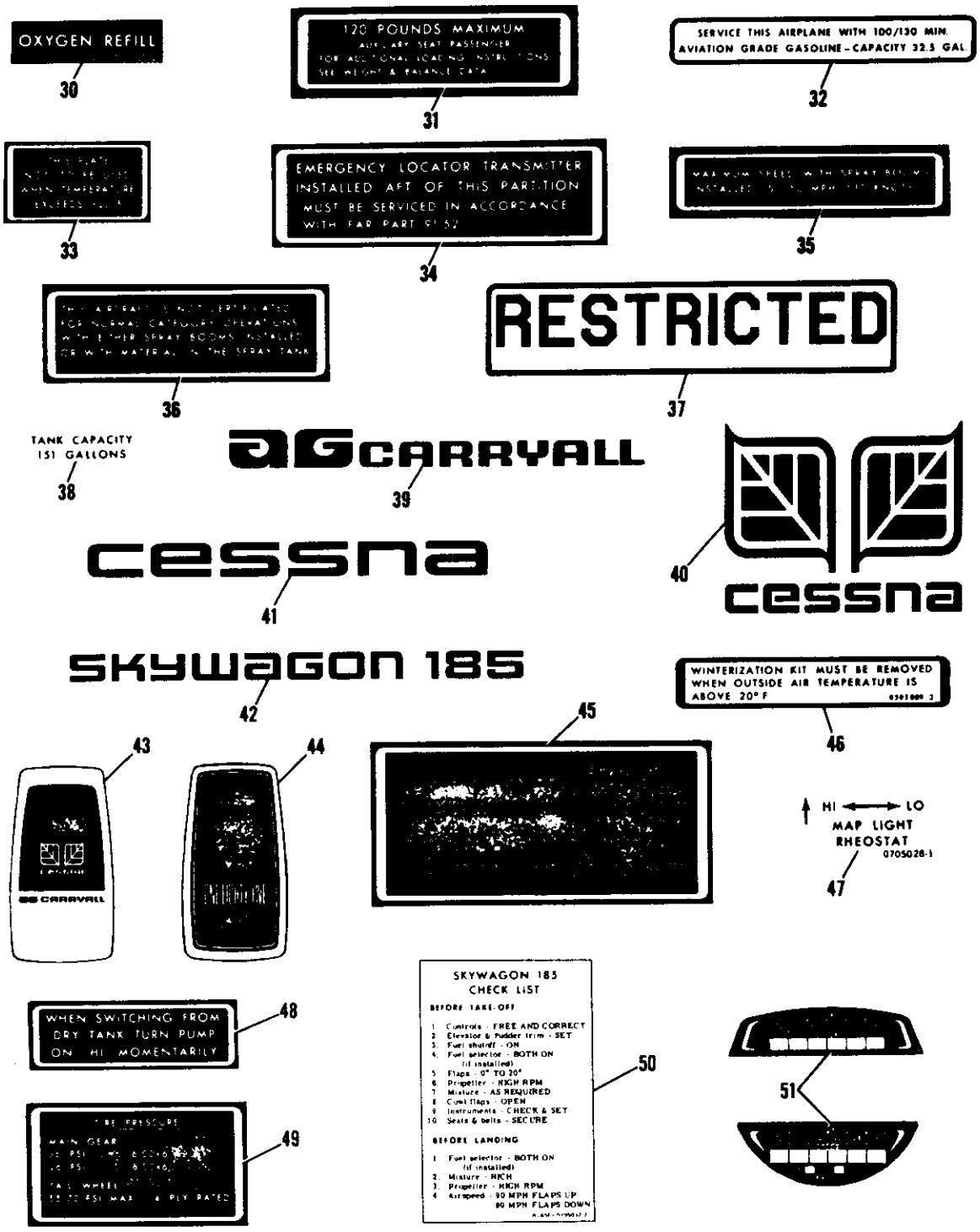

SERIAL 185-1448 THRU 18502310

Figure 2B. (Sheet 4 of 4) Placards, Nameplates & Exterior Markings

FIGURE AND INDEX NO.	PART NUMBER	DESCRIPTION 1 2 3 4 5 6 7	UNITS PER ASSY	USABLE ON CODE
28-30	0705022-1	PLACARD-OXYGEN	1	G
-31	0700214-1	PLACARD-AUXILIARY SEAT	1	H
-32	0705023-4	PLACARD-FUEL FILL 32.5 GAL 185 STD RANGE	AR	
	0705023-5	PLACARD-FUEL FILL 37.0 GAL 185 EXT RANGE INBOARD	AR	
	0705023-6	PLACARD-FUEL FILL 42.0 GAL 185 EXT RANGE OUTBOARD	AR	
-33	1205043-1	PLACARD-WINTERIZATION	2	
-34	1205085-1	PLACARD-EMERGENCY LOCATOR TRANSMITTER	1	L
-35	0705030-1	PLACARD-MAXIMUM SPEED AG CARRYALL	1	J
-36	0705030-2	PLACARD-CERTIFICATION AG CARRYALL	1	J
-37	0705031-1	PLACARD-RESTRICTED AG CARRYALL	2	J
-38	1605029-1	PLACARD-SPRAY TANK AG CARRYALL	1	J
-39	1605022-3	PLACARD-AG CARRYALL	2	J
-40	1605034-1	PLACARD-AG CARRYALL	2	J
-41	0405020-1	PLACARD-WING	2	M
-42	0705033-2	PLACARD-SKYWAGON 185	2	N
-43	1205088-1	PLACARD-CONTROL WHEEL AG CARRYALL	1	P
-44	1205088-16	PLACARD-CONTROL WHEEL	1	N
-45	1205001-160	PLACARD-OPERATIONAL LIMITATIONS VFR ONLY	1	N
	1205001-161	PLACARD-OPERATIONAL LIMITATIONS VFR & IFR	1	N
-46	0505009-3	PLACARD-WINTERIZATION	1	N
-47	0705028-1	PLACARD-MAPLIGHT	1	N
-48	0716132-1	PLACARD-FUEL	1	R
	1205047-1	PLACARD-FUEL	1	N
-49	0705034-2	PLACARD-TIRE PRESSURE	1	N
-50	0705032-2	PLACARD-PILOTS CHECK LIST	1	N
-51	0400213-6	PLACARD-COMPASS CORRECTION	1	N
	3690	TAPE-VINYL BULK ITEM SEE FIG 1	AR	
	S1500	STENCILS-SLANT LETTERS & NUMERALS SEE SHEETS 1&2	AR	
	S1600	STENCILS-VERTICAL LETTERS & NUMERALS SEE SHEETS 1&2	AR	

A---SERIAL 185-1448 THRU 18502310
B---SERIAL 185-1448 THRU 185-1599
C---SERIAL 18501600 THRU 18502090
D---SERIAL 185-1448 THRU 18501679
E---SERIAL 18501680 THRU 18502310
F---SERIAL 18501833 THRU 18502310
G---SERIAL 18501818 THRU 18502310
H---SERIAL 18501872 THRU 18502310
J---SERIAL 18501935 THRU 18502310 AG CARRYALL
K---SERIAL 185-1448 THRU 18501832
L---SERIAL 18501935 THRU 18502310
M---SERIAL 18501935 THRU 18502310 AG CARRYALL
SERIAL 18502091 THRU 18502310
N---SERIAL 18502091 THRU 18502310
P---SERIAL 18502091 THRU 18502310 AG CARRYALL
Q---SERIAL 18501935 THRU 18502090 AG CARRYALL
R---SERIAL 185-1448 THRU 18502090
S---SERIAL 18501680 THRU 18502090
T---SERIAL 18501833 THRU 18502090

Placards (Cont)

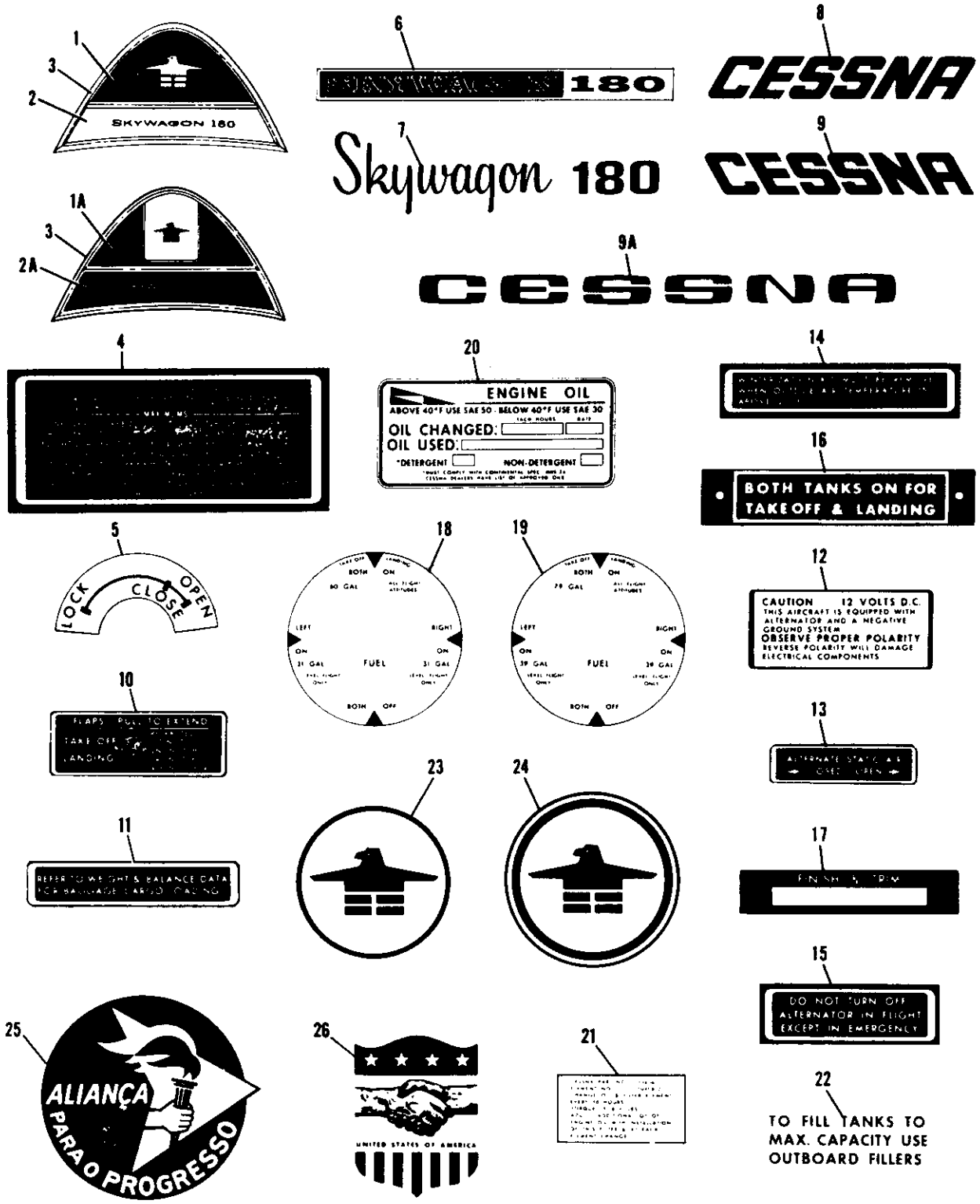

SERIAL 18051994 THRU 18052384

Figure 2C. (Sheet 1 of 2) Placards, Nameplates & Exterior Markings

FIGURE AND INDEX NO.	PART NUMBER	DESCRIPTION 1 2 3 4 5 6 7	UNITS PER ASSY	USABLE ON CODE
2C-		PLACARDS, NAMEPLATES & EXTERIOR MARKINGS	NP	A
- 1	1205030-7	PLACARD-CONTROL WHEEL	1	B
- 1A	0705015-1	PLACARD-CONTROL WHEEL	1	C
- 2	1205030-16	EMBLEM-CONTROL WHEEL	1	B
- 2A	0705015-2	EMBLEM-CONTROL WHEEL	1	C
- 3	0700742-1	PLATE-CONTROL WHEEL	1	H
- 4	1205001-61	PLACARD-OPERATIONAL LIMITATIONS VFR ONLY	1	H
		WEU 1205001-201		
	1205001-201	PLACARD-OPERATIONAL LIMITATIONS DAY NIGHT VFR ONLY	1	H
	1205001-62	PLACARD-OPERATIONAL LIMITATIONS VFR & IFR	1	H
		WEU 1205001-200		
	1205001-200	PLACARD-OPERATIONAL LIMITATIONS DAY NIGHT VFR & IFR	1	H
- 5	0700166-1	PLACARD-DOOR HANDLE LH	1	B
	0700166-2	PLACARD-DOOR HANDLE RH	1	B
- 6	1205013-14	NAMEPLATE-SKYWAGON 180	2	B
- 7	1505015-16	NAMEPLATE-SKYWAGON 180	2	C
	1505015-30	NAMEPLATE-SKYWAGON 180 REVERSE ALASKAIN AIRCRAFT	2	C
- 8	1205010-3	NAMEPLATE-LH	1	B
- 9	1205010-4	NAMEPLATE-RH	1	B
- 9A	1505014-1	NAMEPLATE-CESSNA	2	C
	1505014-2	NAMEPLATE-CESSNA REVERSE ALASKAIN AIRCRAFT	2	C
-10	0705004-1	PLACARD-FLAP INSTRUCTION	1	
-11	1205015-1	PLACARD-BAGGAGE LOAD LIMIT	1	
-12	1205024-1	PLACARD-BATTERY BOX	1	
-13	0505005-1	PLACARD-ALTERNATE STATIC SOURCE	1	K
	0705021-2	PLACARD-ALTERNATE STATIC SOURCE	1	D
-14	0505009-2	PLACARD-WINTERIZATION	1	
-15	0505020-2	PLACARD-MASTER SWITCH	1	C
-16	0511168	PLACARD-FUEL SELECTOR BOTH TANKS ON	1	H
-17	0713047	PLACARD-FINISH & TRIM	1	
-18	S1286-3	PLATE ASSEMBLY-FUEL SELECTOR 60 GAL	1	
-19	S1286-4	PLATE ASSEMBLY-FUEL SELECTOR 79 GAL	1	
-20	S1397-4	PLACARD-INGINE OIL	1	
-21	1250410-3	PLACARD-OIL FILTER	1	
-22	0721205-1	PLACARD-WING	2	
-23	0705006-1	PLACARD-UTILILINE LH	1	B
	0705006-2	PLACARD-UTILILINE RH	1	B
-24	0705014-1	PLACARD-UTILILINE LH	1	C
	0705014-2	PLACARD-UTILILINE RH	1	C
-25	S1714-1	PLACARD-ALLIANCE FOR PROGRESS	1	
-26	S1713-1	PLACARD-HANDS OF FRIENDSHIP	1	

CONTINUED ON NEXT PAGE

Placards (Cont)

27

28

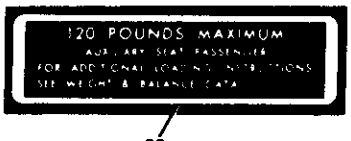

29

30

31

32

33

34

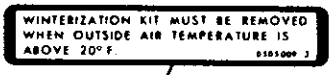

35

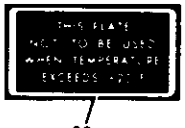

36

37

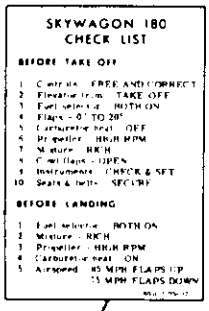

38

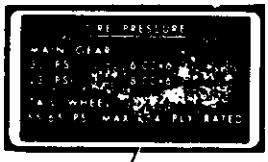

39

40

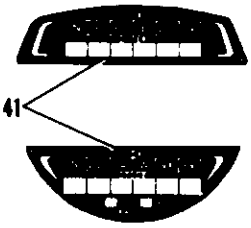

41

SERIAL 18051994 THRU 18052384

Figure 2C. (Sheet 2 of 2) Placards, Nameplates & Exterior Markings

FIGURE AND INDEX NO.	PART NUMBER	DESCRIPTION 1 2 3 4 5 6 7	UNITS PER ASSY	USABLE ON CODE
2C-27	C622003-0103	PLACARD-STROBE LIGHT	1	J
	C622003-0105	PLACARD-STROBE LIGHT	1	G
-28	0705022-1	PLACARD-OXYGEN	1	E
-29	0700214-1	PLACARD-AUXILIARY SEAT	1	F
-30	0705023-1	PLACARD-FUEL FILL 32.5 GAL 180 STD RANGE	AR	
	0705023-2	PLACARD-FUEL FILL 42.0 GAL 180 EXT RANGE	AR	
	0705023-7	PLACARD-FUEL FILL 37.0 GAL 180 EXT RANGE FLOATPLANE	AR	
-31	1205088-15	PLACARD-CONTROL WHEEL	1	G
-32	1205001-157	PLACARD-OPERATIONAL LIMITATIONS DAY VFR ONLY	1	G
	1205001-158	PLACARD-OPERATIONAL LIMITATIONS DAY NIGHT VFR ONLY	1	G
	1205001-159	PLACARD-OPERATIONAL LIMITATIONS DAY NIGHT VFR & IFR	1	G
-33	0705033-1	PLACARD-SKYWAGON 180	2	G
-34	0405020-1	PLACARD-WING	2	G
-35	0505009-3	PLACARD-WINTERIZATION	1	G
-36	1205043-1	PLACARD-WINTERIZATION	2	
-37	0705028-1	PLACARD-MAP LIGHT	1	G
-38	0705032-1	PLACARD-PILOTS CHECK LIST	1	G
-39	0705034-1	PLACARD-TIRE PRESSURE	1	G
-40	1205085-1	PLACARD-EMERGENCY LOCATOR TRANSMITTER	1	G
-41	0400213-6	PLACARD-COMPASS CORECTION	1	G
	3690	TAPE-VINYL BULK ITEM SEE FIG 1	AR	
	S1500	STENCILS-SLANT LETTERS & NUMERALS SEE SHT 1&2 FIG 2B	AR	
	S1600	STENCILS-VERTICAL LETTERS & NUMERALS SEE SHEETS 1&2 FIG 2B	AR	
		A---SERIAL 18051994 THRU 18052384		
		B---SERIAL 18051994 THRU 18052103		
		C---SERIAL 18052104 THPU 18052284		
		D---SERIAL 18052176 THRU 18052384		
		E---SERIAL 18052170 THRU 18052384		
		F---SERIAL 18052192 THRU 18052384		
		G---SERIAL 18052285 THRU 18052384		
		H---SERIAL 18051994 THRU 18052284		
		J---SERIAL 18052176 THRU 18052284		
		K---SERIAL 18051994 THRU 18052175		

Wing

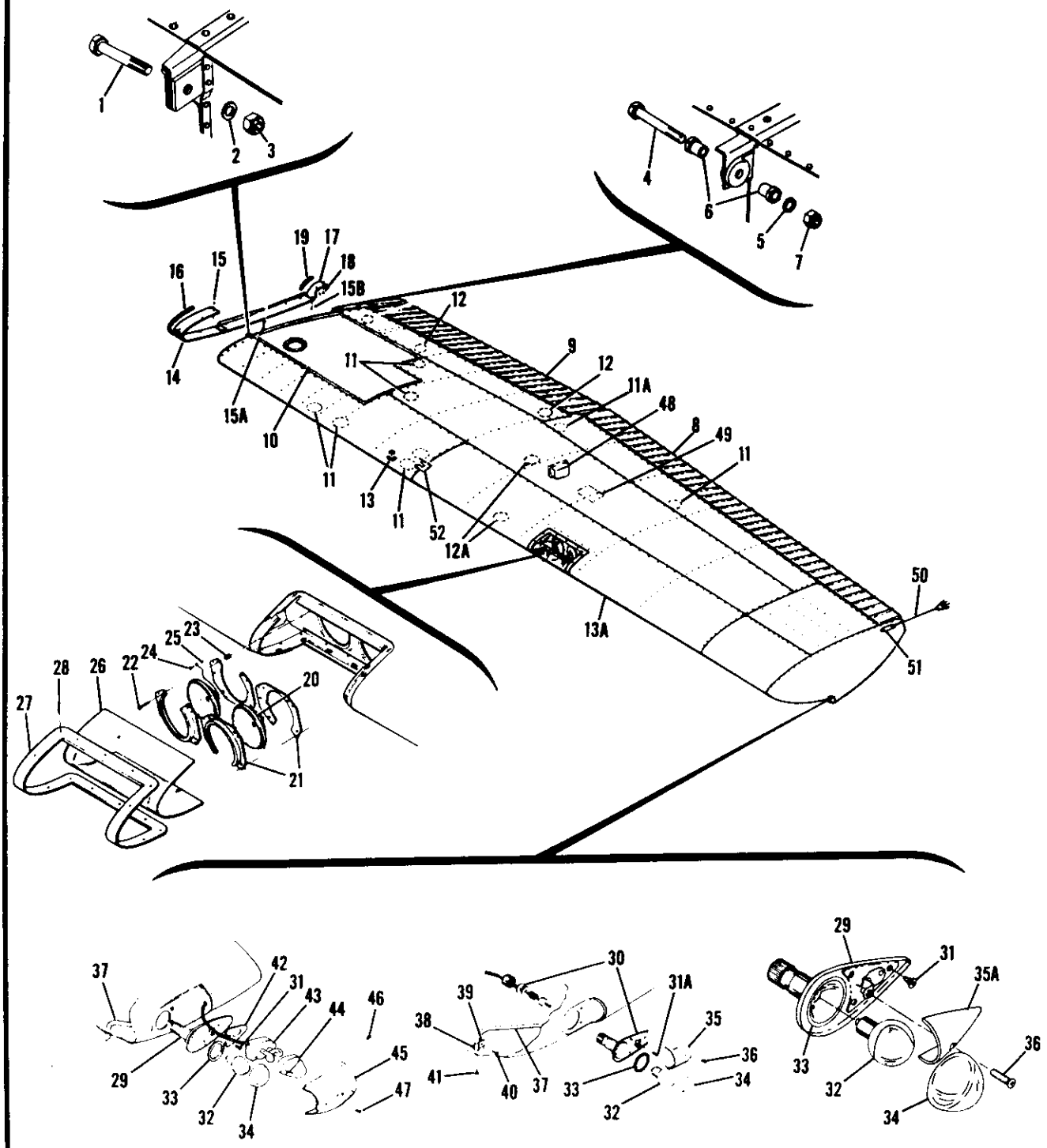

SERIAL 18501833 THRU 18502090
SERIAL 18052176 THRU 18052284

SERIAL 185-0238 THRU 18501832
SERIAL 18051184 THRU 18052175

SERIAL 185-0001 THRU 185-0237

SERIAL 185-0001 THRU 18502090
SERIAL 18051184 THRU 18052284

Figure 3. Wing Assembly Complete

FIGURE AND INDEX NO.	PART NUMBER	DESCRIPTION 1 2 3 4 5 6 7	UNITS PER ASSY	USABLE ON CODE
3 -		WING ASSEMBLY-COMPLETE LH	NP	Z
		WING ASSEMBLY-COMPLETE LH EXTENDED RANGE	NP	Z
		WING ASSEMBLY-COMPLETE RH	NP	Z
		WING ASSEMBLY-COMPLETE RH EXTENDED RANGE	NP	Z
		ATTACHING PARTS		
- 1	AN8-23A	BOLT	1	
- 2	AN960-816	WASHER	3	
- 3	MS20365-820C	NUT	1	
- 4	AN7-24A	BOLT	1	
- 5	AN960-716	WASHER	3	
- 6	0512123	BUSHING	2	
- 7	MS20365-720C	NUT	1	
		---*---		
- 8	SEE FIG 14	AILERON INSTALLATION	1	
- 9	SEE FIG 15	FLAP INSTALLATION	1	
-10	SEE FIG 13	TANK INSTALLATION	1	
-11	S225-4F	PLATE-INSPECTION	7	
	S225-4F *	PLATE-INSPECTION	6	
-11A	S225-4F	PLATE-INSPECTION	1	H
	1222022-1	PLATE-COVER	1	J
		ATTACHING PARTS		
	S1022Z8-8	SCREW	6	H
	S1022Z8-6	SCREW	6	J
		---*---		
-12	S225-5	PLATE-INSPECTION	3	
		ATTACHING PARTS		
	S1021Z8-8	SCREW	6	
		---*---		
-12A	S225-4F	PLATE-INSPECTION	2	P
		ATTACHING PARTS		
	S1022Z8-8	SCREW	6	P
		---*---		
-13	0511062-4	WING UNIT-STALL WARNING LH WING ONLY	1	F
	0511062-11	WING UNIT-STALL WARNING LH WING ONLY	1	G
	0511062-5	WING UNIT-STALL WARNING HEATED LH WING ONLY	1	F
	0511062-12	WING UNIT-STALL WARNING HEATED LH WING ONLY	1	G
		ATTACHING PARTS		
	S1021Z8-6	SCREW	4	
	NAS395-17-3	NUT	4	
		---*---		
-13A	SEE FIG 4	STRUCTURE ASSEMBLY-WING	1	A
	SEE FIG 5	STRUCTURE ASSEMBLY-WING	1	B
	SEE FIG 6	STRUCTURE ASSEMBLY-WING EXTENDED RANGE	1	
-14	0720002-11	FAIRING ASSEMBLY-LH	1	
	0720002-12	FAIRING ASSEMBLY-RH	1	
		ATTACHING PARTS		
-15	S1022Z8-8	SCREW	2	T
	AN507-832-6	SCREW	2	U
-15A	S1022Z8-8	SCREW	7	
	S2900832	WASHER	7	
-15B	S1021Z8-8	SCREW	2	
	NAS395-18-3	NUT	2	
		---*---		
-16	0520005-3	RUB STRIP	1	
-17	0520008	FAIRING ASSEMBLY LH	1	
	0520008-1	FAIRING ASSEMBLY RH	1	
		ATTACHING PARTS		
-18	S1021Z8-6	SCREW	1	
	S1022Z8-6	SCREW	1	
		---*---		
-19	S202RB	MOULDING-10.50 IN LG BULK ITEM REF S202R10.50B ----	AR	

CONTINUED ON NEXT PAGE

FIGURE AND INDEX NO.	PART NUMBER	DESCRIPTION 1 2 3 4 5 6 7	UNITS PER ASSY	USABLE ON CODE
3 -20	0523118-1	LIGHT-LANDING LH WING ONLY	2	
		ATTACHING PARTS		
-21	0423542-6	BRACKET ASSEMBLY	2	
-22	AN515-8R24	SCREW	6	
-23	0713124-1	SPRING	6	
		---*---		
-24	AN515-8R7	SCREW-GROUNDING LH WING ONLY	1	
-25	NAS679A08	NUT-GROUNDING LH WING ONLY	1	
-26	0722100-4	WINDOW-LANDING LIGHT LH WING ONLY	1	
		ATTACHING PARTS		
-27	0722100-3	RETAINER-WINDOW	1	
-28	S1022Z8-8	SCREW	14	
		---*---		
-29	C622001-0201	BASE ASSEMBLY-WING POSITION	1	V
-30	C622001-0202	BASE ASSEMBLY-WING POSITION	1	D
		ATTACHING PARTS		
-31	S1021Z8-6	SCREW	3	C
-31A	S1021Z8-8	SCREW	2	L
	AN507-832R8	SCREW	2	M
	NAS446-4-3	NUT	2	L
	NAS1329A08K120	RIVNUT	2	M
-31B	AN507-632R8	SCREW	3	X
		---*---		
-32	A7512-12	BULB-NAVIGATION LIGHT 12 VOLT GMC	1	
-33	A1257A	GASKET-NAVIGATION LIGHT GMC	1	
-34	A1280-2	LENS-NAVIGATION LIGHT LH RED GMC	1	
	A1280-3	LENS-NAVIGATION LIGHT RH GREEN GMC	1	
-35	0423007-1	SHIELD-NAVIGATION LIGHT	1	Q
	0423564-1	SHIELD-NAVIGATION LIGHT LH	1	W
	0423564-2	SHIELD-NAVIGATION LIGHT RH	1	W
-35A	A1104	FAIRING-NAVIGATION LIGHT GMC	1	C
		ATTACHING PARTS		
-36	AN507-632R12	SCREW	1	R
	AN507-632R14	SCREW	1	W
		---*---		
-37	0523702-3	DETECTOR-NAVIGATION LIGHT LH	1	O
	0523702-4	DETECTOR-NAVIGATION LIGHT RH	1	Q
	1221201-3	DETECTOR-NAVIGATION LIGHT LH	1	S
	1221201-4	DETECTOR-NAVIGATION LIGHT RH	1	S
		ATTACHING PARTS		
-38	S1153-1	BRACKET	1	Q
-39	MS21919DG4	CLAMP	1	Q
-40	S1021Z8-8	SCREW	1	Q
-41	S1021Z8-6	SCREW	1	Q
		---*---		
-42	1520006-1	SPACER-STROBE LIGHT	1	X
-43	C622003-0101	LIGHT-STROBE	1	X
-44	C622003-0104	LENS-STROBE LIGHT	1	X
-45	0523566-5	SHIELD-WING POSITION LIGHT LH WITH STROBE LIGHT	1	X
	0523566-6	SHIELD-WING POSITION LIGHT RH WITH STROBE LIGHT	1	X
	0523566-1	SHIELD-WING POSITION LIGHT LH W/O STROBE LIGHT	1	X
	0523566-2	SHIELD-WING POSITION LIGHT RH W/O STROBE LIGHT	1	X
		ATTACHING PARTS		
-46	AN507-632R8	SCREW	2	X
-47	AN507-632R14	SCREW	1	X
		---*---		

CONTINUED ON NEXT PAGE

FIGURE AND INDEX NO.	PART NUMBER	DESCRIPTION 1 2 3 4 5 6 7	UNITS PER ASSY	USABLE ON CODE
3 -48	C622004-0101	POWER SUPPLY-STROBE LIGHT RH WING ONLY ----------	1	Y
		ATTACHING PARTS		
	AN3-3A	BOLT ----------	4	Y
	AN960-10L	WASHER ----------	4	Y
		---*---		
-49	1220094-2	COVER-ACCESS ----------	1	Y
		ATTACHING PARTS		
	S1022Z8-8	SCREW ----------	8	Y
		---*---		
-50	5169	STATIC DISCHARGER WHEN EXHAUSTED USE C5920001-0101 --------	2	E
	C592001-0101	STATIC DISCHARGER ----------	2	N
		ATTACHING PARTS		
-51	S1021A8-8	SCREW ----------	1	E
	S1021A6-8	SCREW ----------	1	N
		---*---		
-52	0522101-1	COVERPLATE ----------	2	K
		ATTACHING PARTS		
	S1021Z8-8	SCREW ----------	2	K
		---*---		

NOTE. *DENOTES PARTS USED ON EXTENDED RANGE WING

A---SERIAL 18051184 THRU 18051312
B---SERIAL 185-0001 THRU 18502090
SERIAL 18051313 THRU 18052284
C---SERIAL 185-0001 THRU 185-0237
D---SERIAL 185-0238 THRU 18501832
SERIAL 18051184 THRU 18052175
E---SERIAL 185-0777 THRU 185-1335
SERIAL 18051446 THRU 18051906
F---SERIAL 185-0001 THRU 185-0967
SERIAL 18051184 THRU 18051607
G---SERIAL 185-0968 THRU 185-1197 & 185-1200
SERIAL 18051608 THRU 18051823
H---SERIAL 185-0001 THRU 185-1300
SERIAL 18051184 THRU 18051875
J---SERIAL 185-1301 THRU 18502090
SERIAL 18051876 THRU 18052284
K---SERIAL 185-1274 THRU 18502090
SERIAL 18051867 THRU 18052284
L---SERIAL 185-0238 THRU 185-1149
SERIAL 18051184 THRU 18051774
M---SERIAL 185-1150 THRU 18501832
SERIAL 18051775 THRU 18052175
N---SERIAL 185-1336 THRU 18502090
SERIAL 18051907 THRU 18052284
P---SERIAL 185-1437 THRU 18502090 &
AIRCRAFT EQUIPPED WITH WING LEVELER
SERIAL 18051986 THRU 18052284 &
AIRCRAFT EQUIPPED WITH WING LEVELER
Q---SERIAL 185-0238 THRU 185-1599
SERIAL 18051184 THRU 18052103
R---SERIAL 185-0001 THRU 185-1599
SERIAL 18051184 THRU 18052103
S---SERIAL 18501600 THRU 18502090
SERIAL 18052104 THRU 18052284
T---SERIAL 185-0001 THRU 185-1565
SERIAL 18051184 THRU 18052084
U---SERIAL 185-1566 THRU 18502090
SERIAL 18052085 THRU 18052284
V---SERIAL 185-0001 THRU 185-0237 &
18501833 THRU 18502090
SERIAL 18052176 THRU 18052284
W---SERIAL 18501600 THRU 18501832
SERIAL 18052104 THRU 18052175
X---SERIAL 18501833 THRU 18502090
SERIAL 18052176 THRU 18052284
Y---SERIAL 18501887 THRU 18502090
SERIAL 18052206 THRU 18052284
Z---SERIAL 185-0001 THRU 18502090
SERIAL 18051184 THRU 18052284

Wing (Cont)

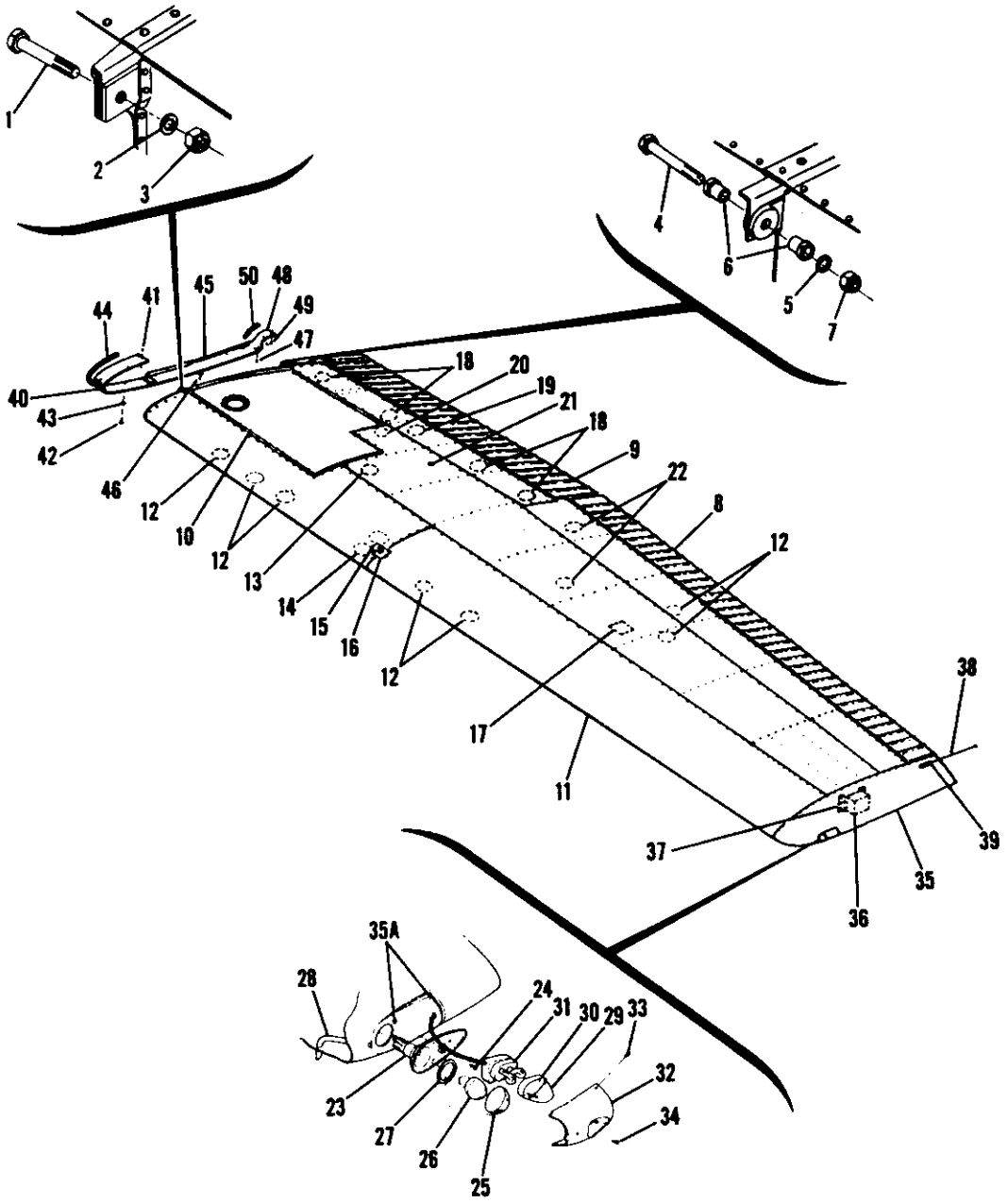

SERIAL 18502091 THRU 18502310
SERIAL 18052285 THRU 18052384

Figure 3A. Wing Assembly Complete

FIGURE AND INDEX NO.	PART NUMBER	DESCRIPTION 1 2 3 4 5 6 7	UNITS PER ASSY	USABLE ON CODE
3A-		WING ASSEMBLY-COMPLETE LH STANDARD RANGE	NP	A
		WING ASSEMBLY-COMPLETE RH STANDARD RANGE	NP	A
		WING ASSEMBLY-COMPLETE LH EXTENDED RANGE	NP	A
		WING ASSEMBLY-COMPLETE RH EXTENDED RANGE	NP	A
		ATTACHING PARTS		
- 1	AN8-23A	BOLT	1	
- 2	AN960-816	WASHER	3	
- 3	MS20365-820C	NUT	1	
- 4	AN7-24A	BOLT	1	
- 5	AN960-716	WASHER	3	
- 6	0512123	BUSHING	2	
- 7	MS20365-720C	NUT	1	
		---*---		
- 8	SEE FIG 14	AILERON INSTALLATION	1	
- 9	SEE FIG 15	FLAP INSTALLATION	1	
-10	SEE FIG 13	TANK INSTALLATION	1	
-11	SEE FIG 6A	STRUCTURE ASSEMBLY-WING	1	
-12	S225-2	PLATE-INSPECTION	7	
-13	S225-2	PLATE-INSPECTION STANDARD RANGE ONLY	1	
		ATTACHING PARTS		
	S1022Z8-8	SCREW	3	
		---*---		
-14	0723605-8	PLATE ASSEMBLY-LH	1	
	0723605-6	PLATE ASSEMBLY-RH	1	
		ATTACHING PARTS		
	S1022Z8-8	SCREW	3	
		---*---		
-15	0723605-9	PLATE ASSEMBLY-LH	1	
	0723605-7	PLATE ASSEMBLY-RH	1	
		ATTACHING PARTS		
		SCREW		
		---*---		
-16	0522101-1	PLATE-COVER	1	
		ATTACHING PARTS		
	S1021Z8-8	SCREW	2	
		---*---		
-17	1220094-2	COVER-ACCESS LH ONLY	1	
		ATTACHING PARTS		
	S1022Z8-8	SCREW	8	
		---*---		
-18	S225-1	PLATE-INSPECTION	4	
-19	S225-1	PLATE-INSPECTION RH ONLY	1	
		ATTACHING PARTS		
	S1021Z8-8	SCREW	3	
		---*---		
-20	1222012-1	PLATE-COVER	1	
		ATTACHING PARTS		
	S1021Z8-8	SCREW	6	
		---*---		
-21	S1908-7	PLUG BUTTON RH STANDARD RANGE ONLY	2	
-22	1222022-1	PLATE-COVER	2	
		ATTACHING PARTS		
	S1022Z8-8	SCREW	6	
		---*---		
-23	C622001-0201	BASE ASSEMBLY-WING POSITION	1	
		ATTACHING PARTS		
-24	AN507-632R8	SCREW	3	
		---*---		
-25	A1280-2	LENS-NAVIGATION LIGHT LH RED GMC	1	
	A1280-3	LENS-NAVIGATION LIGHT RH GREEN GMC	1	
-26	A7512-12	BULB-NAVIGATION LIGHT 12 VOLT GMC	1	
-27	A1257A	GASKET-NAVIGATION LIGHT GMC	1	
-28	1221201-3	DETECTOR-NAVIGATION LIGHT LH	1	
	1221201-4	DETECTOR-NAVIGATION LIGHT RH	1	
-29	C622006-0103	LENS-STROBE LIGHT	1	
-30	C622006-0105	GASKET	1	
-31	C622006-0102	STROBE TUBE ASSEMBLY	1	

CONTINUED ON NEXT PAGE

FIGURE AND INDEX NO.	PART NUMBER	DESCRIPTION 1 2 3 4 5 6 7	UNITS PER ASSY	USABLE ON CODE
3A-32	0723201-3	SHIELD-WING LIGHT LH WITH STROBE LIGHT CUTOUT	1	
	0723201-4	SHIELD-WING LIGHT RH WITH STROBE LIGHT CUTOUT	1	
	0723201-1	SHIELD-WING LIGHT LH W/O STROBE LIGHT CUTOUT	1	
	0723201-2	SHIELD-WING LIGHT RH W/O STROBE LIGHT CUTOUT	1	
		ATTACHING PARTS		
-33	AN507-632R8	SCREW	2	
-34	AN507-632R12	SCREW	1	
		---*---		
-35	0723200-5	TIP ASSEMBLY-WING LH	1	
	0723200-6	TIP ASSEMBLY-WING RH	1	
		ATTACHING PARTS		
	AN515-8R8	SCREW	12	
	0723200-9	STIFFENER-UPPER LH	1	
	0723200-10	STIFFENER-UPPER RH	1	
	0723200-11	STIFFENER-LOWER LH	1	
	0723200-12	STIFFENER-LOWER RH	1	
		---*---		
-35A	NAS1329A06K120	RIVNUT	5	
-36	C622007-0101	POWER SUPPLY-STROBE LIGHT	1	
		ATTACHING PARTS		
	AN520-10R7	SCREW	4	
-37	1620075-3	BRACKET ASSEMBLY	2	
		---*---		
-38	C592001-0101	STATIC DISCHARGER	1	
		ATTACHING PARTS		
-39	S1021A6-8	SCREW	1	
		---*---		
-40	0720618-9	FILLET ASSEMBLY-LH	1	
	0720618-10	FILLET ASSEMBLY-RH	1	
		ATTACHING PARTS		
-41	AN507-832R6	SCREW	2	
-42	S1022Z8-8	SCREW	2	
-43	S290D832	WASHER	1	
		---*---		
-44	0520005-3	RUB STRIP	1	
-45	0720016-1	FAIRING-LH	1	
	0720016-2	FAIRING-RH	1	
		ATTACHING PARTS		
-46	S1022Z8-8	SCREW	5	
	S290D832	WASHER	5	
-47	S1021Z8-8	SCREW	2	
	NAS395-18-3	NUT	2	
		---*---		
-48	0520008	FAIRING ASSEMBLY-LH	1	
	0520008-1	FAIRING ASSEMBLY-RH	1	
		ATTACHING PARTS		
-49	S1021Z8-6	SCREW	1	
	S1022Z8-6	SCREW	1	
		---*---		
-50	S202R8	MOULDING-10.50 IN LG BKI REF S202R10.5B	1	
		A---SERIAL 18502091 THRU 18502310		
		SERIAL 18052285 THRU 18052384		

Wing (Cont)

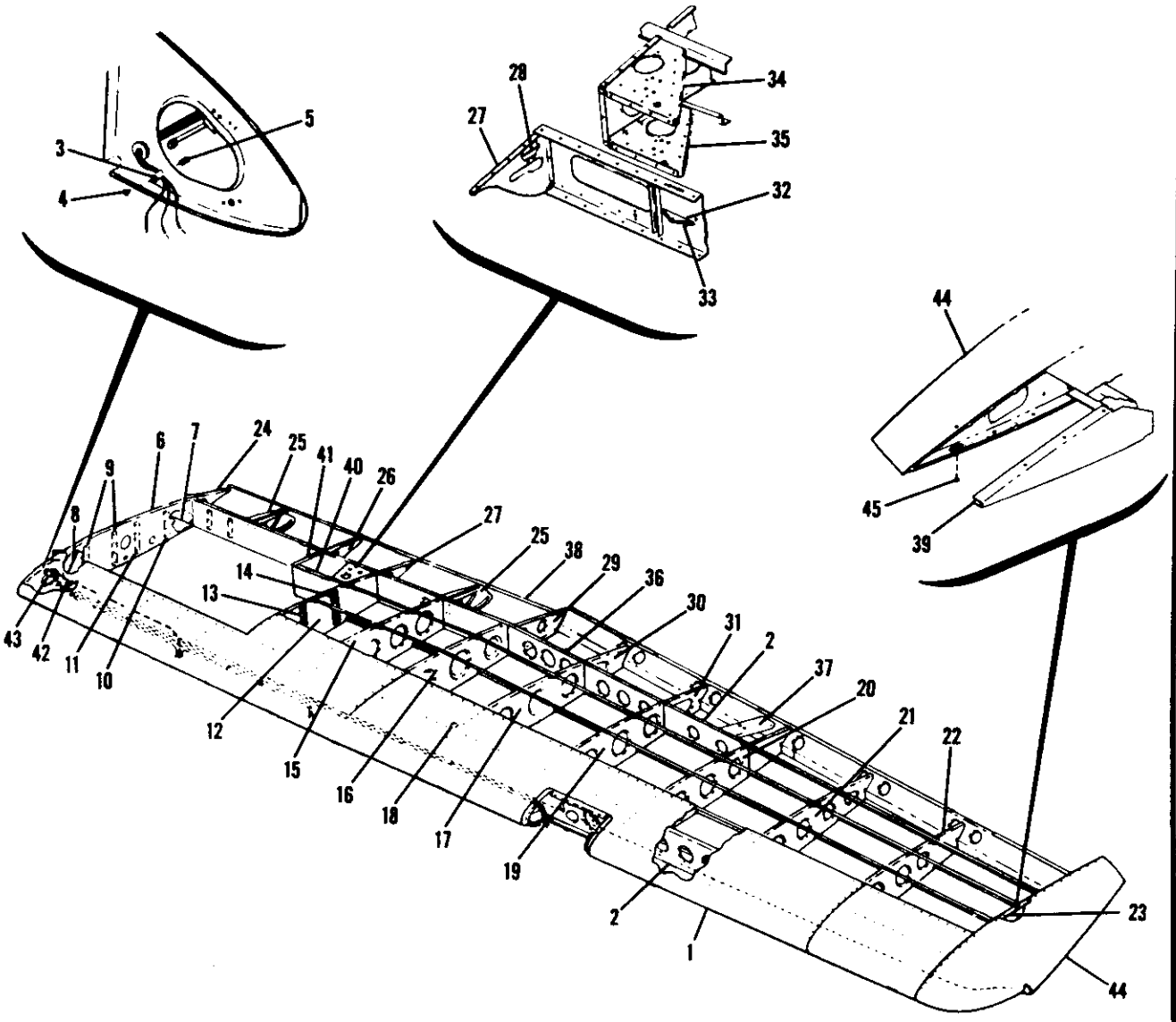

SERIAL 18051184 THRU 18051312

Figure 4. Wing Structure Assembly

FIGURE AND INDEX NO.	PART NUMBER	DESCRIPTION 1 2 3 4 5 6 7	UNITS PER ASSY	USABLE ON CODE
4 -	0792000-23	STRUCTURE ASSEMBLY-WING LH	1	A
	0792000-22	STRUCTURE ASSEMBLY-WING RH	1	A
	0792000-25	STRUCTURE ASSEMBLY-WING LH CORROSION PROOF	1	A
	0792000-24	STRUCTURE ASSEMBLY-WING RH CORROSION PROOF	1	A
- 1	SEE FIG 7	LEADING EDGE ASSEMBLIES-WING	1	
	SEE FIG 11	SKINS & STRINGERS INSTALLATION	1	
- 2	SEE FIG 9	SPARS-WING	1	
- 3	MS21919DG6	CLAMP	1	
- 4	S1021ZR-8	SCREW	1	
- 5	NAS446-4-3	NUT	1	
	0721100-23	RIB ASSEMBLY-WING ROOT LH	1	
	0721100-24	RIB ASSEMBLY-WING ROOT RH	1	
- 6	0721100-25	RIB ASSEMBLY-WING ROOT LH	1	
	0721100-26	RIB ASSEMBLY-WING ROOT RH	1	
- 7	1221101-1	REINFORCEMENT-ROOT RIB LH	1	
	1221101-2	REINFORCEMENT-ROOT RIB RH	1	
- 8	0721116-1	REINFORCEMENT-ROOT RIB LH	1	
	0721116-2	REINFORCEMENT-ROOT RIB RH	1	
- 9	0721100-7	ANGLE-STIFFENER	2	
-10	0721100-6	ANGLE-STIFFENER	1	
-11	0721100-5	ANGLE-STIFFENER	1	
	0721111-1	RIB ASSEMBLY-WING FUEL BAY LH WHEN EXHAUSTED	1	
		USE 0721111-21		
	0721111-21	RIB ASSEMBLY-WING FUEL BAY LH	1	
	0721111-16	RIB ASSEMBLY-WING FUEL BAY RH	1	
-12	0721111-7	RIB-WING FUEL BAY LH	1	
	0721111-8	RIB-WING FUEL BAY RH	1	
-13	0721100-7	ANGLE-STIFFENER	2	
-14	0721100-6	ANGLE-STIFFENER	1	
-15	0722201-1	RIB-CENTER STA 85.625	1	
-16	0523510	RIB-CENTER LH STA 100.00 WHEN EXHAUSTED	1	
		USE 0523510-7		
	0523510-7	RIB-CENTER LH STA 100.00	1	
	0523510-1	RIB-CENTER RH STA 100.00 WHEN EXHAUSTED	1	
		USE 0523510-6		
	0523510-6	RIB ASSEMBLY-WING FUEL BAY LH	1	
-17	0523511-7	RIB-CENTER STA 118.00	1	
-18	0523511-6	SPACER	1	
-19	0523512-3	RIB-CENTER STA 136.00	1	
-20	0523513-3	RIB-CENTER LH STA 154.00 WHEN EXHAUSTED	1	
		USE 0523513-9		
	0523513-9	RIB-CENTER LH STA 154.00	1	
	0523513-6	RIB-CENTER RH STA 154.00 WHEN EXHAUSTED	1	
		USE 0523513-10		
	0523513-10	RIB-CENTER RH STA 154.00	1	
-21	0523514-3	RIB-CENTER STA 172.00	1	
-22	0523515-3	RIB-CENTER STA 190.00	1	
-23	0720608-1	RIB ASSEMBLY-CENTER STA 208.00	1	
	NAS444-4	NUTPLATE	10	
-24	0523232	RIB-TRAILING EDGE ROOT STA 23.625	1	
-25	1221010-7	RIB ASSEMBLY-FLAP TRACK STA 39.00 & 85.875	2	
	1221010-13	BRACKET-LH	1	
	1221010-14	BRACKET-RH	1	
-26	0523233-2	RIB-TRAILING EDGE STA 56.531	1	
-27	0523233	RIB ASSEMBLY-TRAILING EDGE STA 71.375	1	
-28	0523233-3	RUB STRIP	1	
-29	0523230	RIB ASSEMBLY-TRAILING EDGE LH STA 100.5	1	
	0523230-1	RIB ASSEMBLY-TRAILING EDGE RH STA 100.5	1	
	05232304	ANGLE-LH	1	
	05232305	ANGLE-RH	1	
-30	0523511-4	RIB-TRAILING EDGE STA 118.00	1	
-31	0523512-4	RIB-TRAILING EDGE STA 136.00	1	
-32	0523407	BRACKET-FLAP PULLEY UPPER	1	
-33	0523407-1	BRACKET-FLAP PULLEY LOWER	1	
-34	0721112-3	BRACKET-FLAP BELLCRANK SUPPORT UPPER LH	1	
	0721112-4	BRACKET-FLAP BELLCRANK SUPPORT UPPER RH	1	
-35	0721112-1	BRACKET-FLAP BELLCRANK SUPPORT LOWER LH	1	
	0721112-2	BRACKET-FLAP BELLCRANK SUPPORT UPPER RH	1	
-36	0523408	BRACKET-AILERON PULLEY	1	

CONTINUED ON NEXT PAGE

FIGURE AND INDEX NO.	PART NUMBER	DESCRIPTION 1 2 3 4 5 6 7	UNITS PER ASSY	USABLE ON CODE
4 -37	0523219-2	CHANNEL-AILERON BELLCRANK	1	
	0523219-3	CHANNEL-AILERON BELLCRANK SUPPORT UPPER RH	1	
	0523219-4	CHANNEL-AILERON BELLCRANK SUPPORT LOWER LH	1	
	0523219-5	CHANNEL-AILERON BELLCRANK SUPPORT LOWER RH	1	
-38	0720005-1	STIFFENER-TRAILING EDGE INBOARD	1	
-39	0721107-1	FAIRING-RIB LH STA 208.00	1	
	0721107-2	FAIRING-RIB RH STA 208.00	1	
-40	0721111-5	BULKHEAD ASSEMBLY	1	
-41	0721111-3	RIB-LH STA 56.531	1	
	0721111-4	RIB-RH STA 56.531	1	
-42		TUBE ASSEMBLY-PITOT LH WING ONLY	NP	
		ATTACHING PARTS		
-43	AN742D4	CLAMP TIN	1	
	AN515-6R8	SCREW	1	
	NAS679A06	NUT	1	
		---*---		
	S1071-1	TUBE-POLYETHYLENE-52 IN. LG. BULK ITEM	AR	
		REF S-1071-1-52.0		
	S1131-1	INSERT	2	
	S1130-1	NUT	2	
-44	0523701-4	TIP ASSEMBLY-WING WHEN EXHAUSTED USE 0723615-200-791	2	
		ATTACHING PARTS		
-45	S1021Z8-8	SCREW	10	
		---*---		

NOTE. WING STRUCTURE ASSEMBLIES INCLUDE ALL WIRING NECESSARY FOR INSTALLATION.

A---SERIAL 18051184 THRU 18051312

FIGURE AND INDEX NO.	PART NUMBER	DESCRIPTION 1 2 3 4 5 6 7	UNITS PER ASSY	USABLE ON CODE
5 -	1220002-201	STRUCTURE ASSEMBLY-WING LH	1	G
	1220002-209	STRUCTURE ASSEMBLY-WING LH WHEN EXHAUSTED USE 1220002-211 -	1	H
	1220002-211	STRUCTURE ASSEMBLY-WING LH WHEN EXHAUSTED USE 1220002-213 -	1	K
	1220002-213	STRUCTURE ASSEMBLY-WING LH	1	L
	1220002-91	STRUCTURE ASSEMBLY-WING LH	1	Z
	1220002-202	STRUCTURE ASSEMBLY-WING RH WHEN EXHAUSTED USE 1220002-210 -	1	J
	1220002-210	STRUCTURE ASSEMBLY-WING RH WHEN EXHAUSTED USE 1220002-212 -	1	K
	1220002-212	STRUCTURE ASSEMBLY-WING RH	1	L
	1220002-90	STRUCTURE ASSEMBLY-WING RH	1	Z
- 1	SEE FIG 8	LEADING EDGE ASSEMBLIES-WING	1	
	SEE FIG 12	SKINS & STRINGERS INSTALLATION	1	
- 2	SEE FIG 10	SPARS ASSEMBLIES	1	
- 3	S1131-1	INSERT	2	
	S1130-1	NUT	1	
	S1132-1	UNION	1	
	S1071-1	TUBE-52.0 IN LG BULK ITEM REF S-1071-1-52.0	1	
		ATTACHING PARTS		
- 4	AN742D4	CLAMP	1	
	S1021Z8-8	SCREW	1	
	NAS395-16-3	NUT	1	
		---*---		
- 5	MS21919DG6	CLAMP-LH	1	
	S1155-3	PLASTIC CLAMP RH	1	
		ATTACHING PARTS		
- 6	S1021Z8-8	SCREW	1	
- 7	NAS446-4-3	NUT	1	
		---*---		
- 8	0721100-23	RIB ASSEMBLY-WING ROOT LH	1	
	0721100-24	RIB ASSEMBLY-WING ROOT RH	1	
- 9	0721100-25	RIB-WING ROOT LH	1	
	0721100-26	RIB-WING ROOT RH	1	
-10	1221101-1	REINFORCEMENT-WING ROOT RIB LH	1	
	1221101-2	REINFORCEMENT-WING ROOT RIB RH	1	
-11	0721116-1	REINFORCEMENT-WING ROOT RIB LH	1	
	0721116-2	REINFORCEMENT-WING ROOT RIB RH	1	
-12	0721100-7	ANGLE-STIFFENER	2	
	0721100-6	ANGLE-STIFFENER	1	
	0721100-5	ANGLE-STIFFENER	1	

CONTINUED ON NEXT PAGE

Wing (Cont)

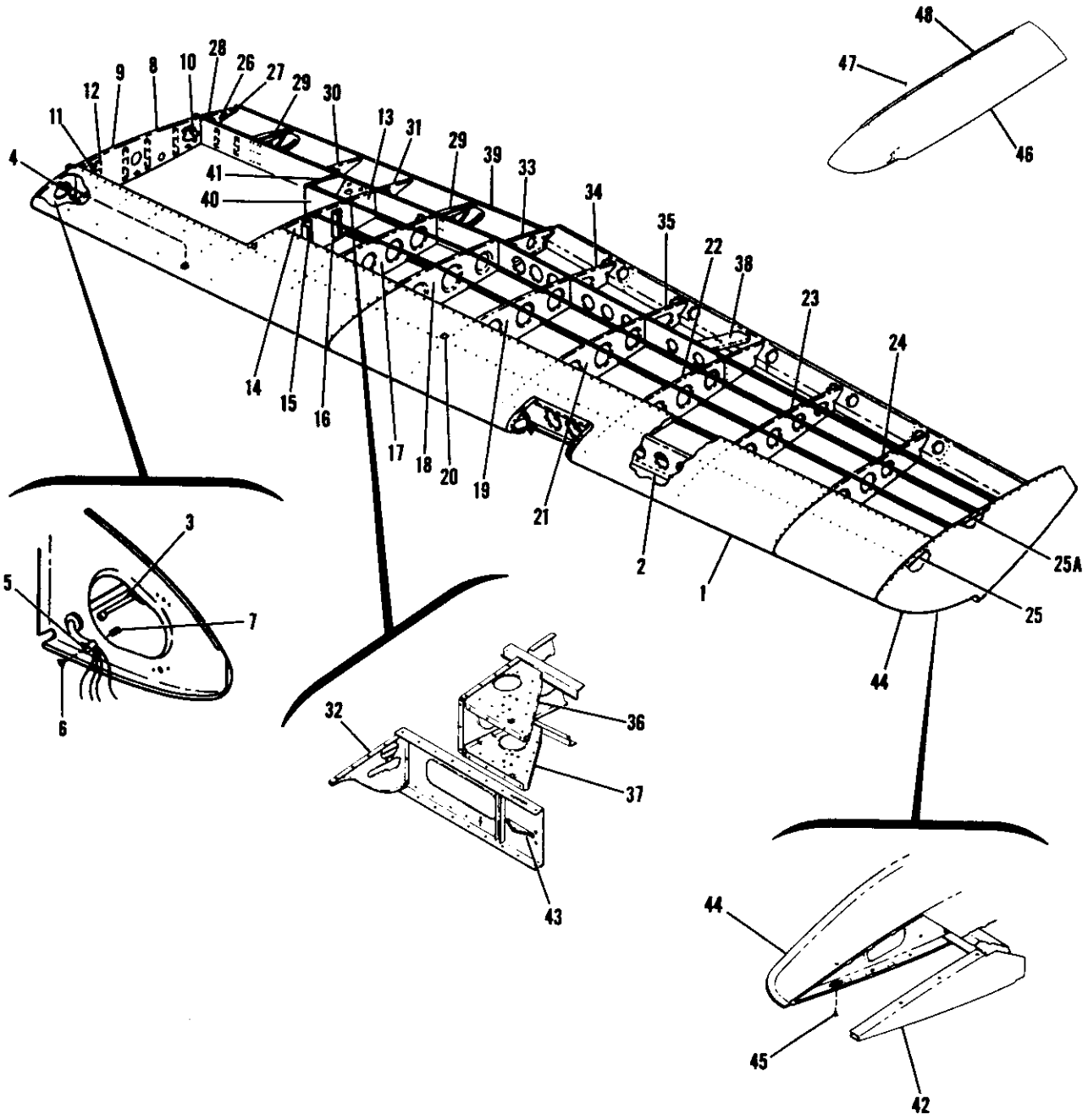

SERIAL 185-0001 THRU 18502090
SERIAL 18051313 THRU 18052284

Figure 5. Wing Structure Assembly

FIGURE AND INDEX NO.	PART NUMBER	DESCRIPTION 1 2 3 4 5 6 7	UNITS PER ASSY	USABLE ON CODE
5 -13	0721111-1	RIB ASSEMBLY-WING FUEL BAY LH WEU 0721111-21	1	
	0721111-21	RIB ASSEMBLY-WING FUEL BAY LH	1	
	0721111-16	RIB ASSEMBLY-WING FUEL BAY RH	1	
-14	0721111-7	RIB-WING FUEL BAY LH	1	
	0721111-15	RIB-WING FUEL BAY RH	1	
-15	0721100-7	ANGLE-STIFFENER	2	
-16	0721100-6	ANGLE-STIFFENER	1	
-17	0523509-2	RIB-CENTER STA 85.875 WEU 0722201-1	1	W
	0722201-1	RIB-CENTER STA 85.875	1	X
-18	0523510-7	RIB-CENTER WING LH STA 100.0	1	Y
	0722194-1	RIB-CENTER WING LH STA 100.0	1	Z
	0523510-6	RIB-CENTER WING RH STA 100.0	1	Y
	0722194-2	RIB-CENTER WING RH STA 100.0	1	Z
-19	0523511-8	RIB-CENTER STA 118.0	1	U
	0523511-21	RIB ASSEMBLY-CENTER STA 118.0	1	V
-20	0523511-6	SPACER	1	
-21	0523512-7	RIB-CENTER STA 136.0	1	
-22	0523513-7	RIB-CENTER WING LH STA 154.0 WEU 0722197-3	1	W
	0722197-3	RIB-CENTER WING LH STA 154.0	1	X
	0523513-8	RIB-CENTER WING RH STA 154.0 WEU 0722197-4	1	W
	0722197-4	RIB-CENTER WING RH STA 154.0	1	X
-23	0720607-1	RIB-CENTER STA 172.0 WEU 0722198-1	1	W
	0722198-1	RIB-CENTER STA 172.0	1	X
-24	0720607-2	RIB-CENTER STA 190.0 WEU 0722199-1	1	W
	0722199-1	RIB-CENTER STA 190.0	1	X
-25	0720608-23	RIB ASSEMBLY-NOSE STA 208.0	1	
	MS20230A2	GROMMET	1	
	NAS696A08K	NUTPLATE	2	
-25A	0720608-7	RIB ASSEMBLY-TRAILING STA 208.0 WEU 0720608-15	1	M
	0720608-15	RIB ASSEMBLY-TRAILING STA 208.0	1	N
	NAS444-4-3	NUTPLATE	10	M
	NAS686A08K	NUTPLATE	10	N
-26	NAS395-14-3	NUT	3	
-27	AN6328-8Z3	NUT	1	
-28	0523232	RIB-TRAILING EDGE ROOT STA 23.625	1	E
	0523232-2	RIB-TRAILING EDGE ROOT STA 23.625	1	F
-29	1221010-7	RIB ASSEMBLY-FLAP TRACK STA 39.0 & 85.875	2	
	1221010-13	BRACKET	1	
	1221010-14	BRACKET	1	
-30	0523233-6	RIB-TRAILING EDGE STA 56.415	1	
-31	0523233-7	RIB ASSEMBLY-TRAILING EDGE STA 71.977	1	
-32	0523233-3	RUB STRIP	1	
-33	0523230	RIB ASSEMBLY-TRAILING EDGE WING LH STA 100.5	1	
	0523230-1	RIB ASSEMBLY-TRAILING EDGE WING RH STA 100.5	1	
	0523230-4	ANGLE-WING LH	1	
	0523230-5	ANGLE-WING RH	1	
-34	0523511-4	RIB-TRAILING EDGE STA 118.0	1	
-35	0523512-4	RIB-TRAILING EDGE STA 136.0	1	
-36	0721117-3	BRACKET-FLAP BELLCRANK UPPER LH	1	
	0721117-4	BRACKET-FLAP BELLCRANK UPPER RH	1	
-37	0721117-1	BRACKET-FLAP BELLCRANK LOWER LH	1	
	0721117-2	BRACKET-FLAP BELLCRANK LOWER RH	1	
-38	0523219-2	CHANNEL-AILERON BELLCRANK SUPPORT UPPER LH	1	
	0523219-3	CHANNEL-AILERON BELLCRANK SUPPORT UPPER RH	1	
	0523219-4	CHANNEL-AILERON BELLCRANK SUPPORT LOWER LH	1	
	0523219-5	CHANNEL-AILERON BELLCRANK SUPPORT LOWER RH	1	
-39	0720005-1	STIFFENER-TRAILING EDGE INBOARD	1	
-40	0722012-1	BULKHEAD ASSEMBLY	1	
-41	0721111-3	RIB-WING LH STA 56.415	1	
	0721111-4	RIB-WING RH STA 56.415	1	
-42	0721107-1	FAIRING-LH	1	
	0721107-2	FAIRING-RH	1	
-43	0523407-1	BRACKET ASSEMBLY-PULLEY LOWER	1	A
	0760618-2	BRACKET ASSEMBLY-PULLEY LOWER	1	B
	0523407	BRACKET ASSEMBLY-PULLEY UPPER	1	A
	0760618-1	BRACKET ASSEMBLY-PULLEY UPPER	1	B

CONTINUED ON NEXT PAGE

FIGURE AND INDEX NO.	PART NUMBER	DESCRIPTION 1 2 3 4 5 6 7	UNITS PER ASSY	USABLE ON CODE
5 -44	0523700	TIP ASSEMBLY-WING	2	B
	0523701-4	TIP ASSEMBLY-WING WHEN EXHAUSTED USE 0723615-200-791	2	C
	0723615-200-791	TIP ASSEMBLY-WING	2	D
		ATTACHING PARTS		
-45	S1021Z8-8	SCREW	10	M
	AN515-8R8	SCREW	10	Q
	0423008-8	STIFFENER USE ON UPPER SIDE RH TIP & LOWER SIDE LH TIP	1	D
	0423008-9	STIFFENER USE ON UPPER SIDE LH TIP & LOWER SIDE RH TIP	1	D
		---*---		
	S1863-3	NUTPLATE	3	B
-46	0523565-201-791	TIP-WING LH	1	S
	0523565-200-791	TIP-WING RH	1	S
	0523565-29-791	TIP ASSEMBLY-WING LH	1	T
	0523565-30-791	TIP ASSEMBLY-WING RH	1	T
		ATTACHING PARTS		
-47	AN515-8R8	SCREW	12	R
-48	0523565-21	STIFFENER USE ON UPPER SIDE LH TIP & LOWER SIDE RH TIP	1	R
	0523565-22	STIFFENER USE ON LOWER SIDE LH TIP & UPPER SIDE RH TIP	1	R
		---*---		
	NAS1329A06K120	NUT	5	T

NOTE. WING STRUCTURE ASSEMBLIES INCLUDE ALL WIRING NECESSARY FOR INSTALLATION.

A---SERIAL 185-0001 THRU 18502090
SERIAL 18051313 THRU 18052284
B---SERIAL 185-0001 THRU 185-0237
C---SERIAL 185-0238 THRU 185-1149
SERIAL 18051313 THRU 18051774
D---SERIAL 185-1150 THRU 185-1599
SERIAL 18051775 THRU 18052103
E---SERIAL 185-0001 THRU 185-1277
SERIAL 18051313 THRU 18051873
F---SERIAL 185-1278 THRU 18502090
SERIAL 18051874 THRU 18052284
G---SERIAL 185-0001 THRU 185-1197 & 185-1200
SERIAL 18051313 THRU 18051823
H---SERIAL 185-1198,185-1199,185-1201 THRU 185-1300
SERIAL 18051824 THRU 18051875
J---SERIAL 185-0001 THRU 185-1300
SERIAL 18051313 THRU 18051875
K---SERIAL 185-1301 THRU 185-1401
SERIAL 18051876 THRU 18051954
L---SERIAL 185-1402 THRU 18501930,
18501932 THRU 18501934
SERIAL 18051955 THRU 18052222
M---SERIAL 185-0001 THRU 185-1447
SERIAL 18051313 THRU 18051993
N---SERIAL 185-1448 THRU 18502090
SERIAL 18051994 THRU 18052284
P---SERIAL 185-0001 THRU 185-1599
SERIAL 18051313 THRU 18052103
Q---SERIAL 185-1448 THRU 185-1599
SERIAL 18051994 THRU 18052103
R---SERIAL 18501600 THRU 18502090
SERIAL 18052104 THRU 18052284
S---SERIAL 18501600 THRU 18501832
SERIAL 18052104 THRU 18052175
T---SERIAL 18501833 THRU 18502090
SERIAL 18052176 THRU 18052284
U---SERIAL 185-0001 THRU 18501886
SERIAL 18051313 THRU 18052205
V---SERIAL 18501887 THRU 18502090
SERIAL 18052206 THRU 18052284
W---SERIAL 185-0001 THRU 18501991
SERIAL 18051313 THRU 18052243
X---SERIAL 18501992 THRU 18502090
SERIAL 18052244 THRU 18052284
Y---SERIAL 185-0001 THRU 18501930,
18501932 THRU 18501934
SERIAL 18051313 THRU 18052222
Z---SERIAL 18501931, 18501935 THRU 18502090
SERIAL 18052223 THRU 18052284

Wing (Cont)

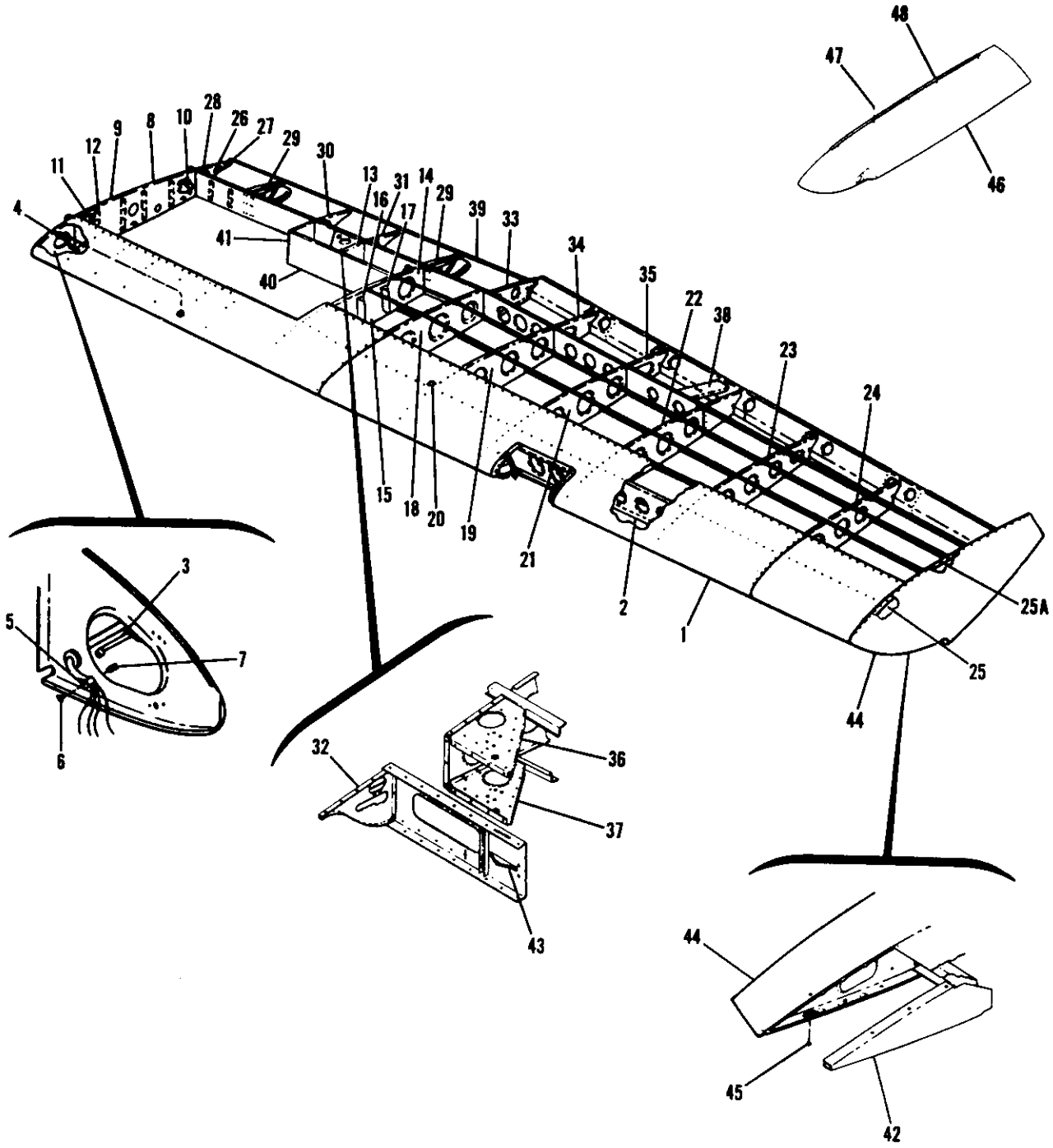

SERIAL 185-0001 THRU 18502090
SERIAL 18051184 THRU 18052284

Figure 6. Wing Structure Assembly Extended Range

FIGURE AND INDEX NO.	PART NUMBER	DESCRIPTION 1 2 3 4 5 6 7	UNITS PER ASSY	USABLE ON CODE
6 -	1220003-201	STRUCTURE ASSEMBLY-WING LH EXTENDED RANGE	1	G
	1220003-211	STRUCTURE ASSEMBLY-WING LH EXTENDED RANGE WHEN EXHAUSTED USE 1220003-213	1	H
	1220003-213	STRUCTURE ASSEMBLY-WING LH EXTENDED RANGE WHEN EXHAUSTED USE 1220003-215	1	K
	1220003-215	STRUCTURE ASSEMBLY-WING LH EXTENDED RANGE	1	L
	1220003-35	STRUCTURE ASSEMBLY-WING LH EXTENDED RANGE	1	X
	1220004-202	STRUCTURE ASSEMBLY-WING RH EXTENDED RANGE WHEN EXHAUSTED USE 1220004-208	1	J
	1220004-208	STRUCTURE ASSEMBLY-WING RH EXTENDED RANGE WHEN EXHAUSTED USE 1220004-210	1	K
	1220004-210	STRUCTURE ASSEMBLY-WING RH EXTENDED RANGE	1	L
	1220004-32	STRUCTURE ASSEMBLY-WING RH EXTENDED RANGE	1	X
- 1	SEE FIG 8	LEADING EDGE ASSEMBLIES-WING	1	
	SEE FIG 12	SKINS & STRINGERS INSTALLATION	1	
- 2	SEE FIG 10	SPAR ASSEMBLIES	1	
- 3	S1131-1	INSERT	2	
	S1130-1	NUT	1	
	S1132-1	UNION	1	
	S1071-1	TUBE-52.0 IN. LG. BULK ITEM REF S-1071-1-52	1	
		ATTACHING PARTS		
- 4	AN742D4	CLAMP	1	
	S102128-8	SCREW	1	
	NAS395-16-3	NUT	1	
		---*---		
- 5	MS21919DG6	CLAMP-LH	1	
	S1155-3	PLASTIC CLAMP-RH	1	
		ATTACHING PARTS		
- 6	S102128-8	SCREW	1	
- 7	NAS446-4-3	NUT	1	
		---*--		
- 8	0721100-23	RIB ASSEMBLY-ROOT LH	1	
	0721100-24	RIB ASSEMBLY-ROOT RH	1	
- 9	0721100-25	RIB-ROOT LH	1	
	0721100-26	RIB-ROOT RH	1	
-10	1221101-1	REINFORCEMENT-ROOT RIB LH	1	
	1221101-2	REINFORCEMENT-ROOT RIB RH	1	
-11	0721116-1	REINFORCEMENT-ROOT RIB LH	1	
	0721116-2	REINFORCEMENT-ROOT RIB RH	1	
-12	0721100-7	ANGLE-STIFFENER	2	
	0721100-6	ANGLE-STIFFENER	1	
	0721100-5	ANGLE-STIFFENER	1	
-13	1220019-9	RIB-LH WHEN EXHAUSTED USE 1220019-18	1	
	1220019-18	RIB-LH	1	
	1220019-10	RIB-RH	1	
-14	1220019-1	RIB ASSEMBLY-LH STA 85.625 WEU 1220019-19	1	
	1220019-19	RIB ASSEMBLY-LH STA 85.625	1	
	1220019-2	RIB ASSEMBLY-RH STA 85.625 WEU 1220019-20	1	
	1220019-20	RIB ASSEMBLY-RH STA 85.625	1	
-15	1220019-3	RIB-LH STA 85.625	1	
	1220019-4	RIB-RH STA 85.625	1	
-16	0721100-7	ANGLE-STIFFENER	2	
-17	0721100-6	ANGLE-STIFFENER	1	
-18	0523510-7	RIB-CENTER WING LH STA 100.0	1	W
	0722194-1	RIB-CENTER WING LH STA 100.0	1	X
	0523510-6	RIB-CENTER WING RH STA 100.0	1	W
	0722194-2	RIB-CENTER WING RH STA 100.0	1	X
-19	0523511-8	RIB-CENTER STA 118.0	1	U
	0523511-21	RIB ASSEMBLY-CENTER STA 118.0	1	V
-20	0523511-6	SPACER	1	
-21	0523512-7	RIB-CENTER STA 136.0	1	
-22	0523513-7	RIB-CENTER WING LH STA 154.0 WEU 0722197-3	1	Y
	0722197-3	RIB-CENTER WING LH STA 154.0	1	Z
	0523513-8	RIB-CENTER WING RH STA 154.0 WEU 0722197-4	1	Y
	0722197-4	RIB-CENTER WING RH STA 154.0	1	Z
-23	0720607-1	RIB-CENTER STA 172.0 WEU 0722198-1	1	Y
	0722198-1	RIB-CENTER STA 172.0	1	Z
-24	0720607-2	RIB-CENTER STA 190.0 WEU 0722199-1	1	Y
	0722199-1	RIB-CENTER STA 190.0	1	Z

CONTINUED ON NEXT PAGE

FIGURE AND INDEX NO.	PART NUMBER	DESCRIPTION 1 2 3 4 5 6 7	UNITS PER ASSY	USABLE ON CODE
6 -25	0720608-23	RIB ASSEMBLY-NOSE STA 208.0	1	
	MS20230A2	GROMMET	1	
	NAS696A08K	NUTPLATE	2	
-25A	0720608-7	RIB ASSEMBLY-TRAILING EDGE STA 208.0 WHEN EXHAUSTED USE 0720608-15	1	M
	0720608-15	RIB ASSEMBLY-TRAILING EDGE STA 208.0	1	N
	NAS444-4-3	NUTPLATE	10	M
	NAS686A08K	NUTPLATE	10	N
-26	NAS395-14-3	NUT	3	
-27	AN6328-8Z3	NUT	1	
-28	0523232	RIB-TRAILING EDGE ROOT STA 23.625	1	E
	0523232-2	RIB-TRAILING EDGE ROOT STA 23.625	1	F
-29	1221010-7	RIB ASSEMBLY-FLAP TRACK STA 39.0 & 85.875	2	
	1221010-13	BRACKET	1	
	1221010-14	BRACKET	1	
-30	0523233-6	RIB-TRAILING EDGE STA 56.415	1	
-31	0523233-7	RIB ASSEMBLY-TRAILING EDGE STA 71.977	1	
-32	0523233-3	RUB STRIP	1	
-33	0523230	RIB ASSEMBLY-TRAILING EDGE WING LH STA 100.5	1	
	0523230-1	RIB SSSEMBLY-TRAILING EDGE WING RH STA 100.5	1	
	0523230-4	ANGLE-WING LH	1	
	0523230-5	ANGLE-WING RH	1	
-34	0523511-4	RIB-TRAILING EDGE STA 118.0	1	
-35	0523512-4	RIB-TRAILING EDGE STA 136.0	1	
-36	0721112-3	BRACKET-FLAP BELLCRANK UPPER LH	1	
	0721112-4	BRACKET-FLAP BELLCRANK UPPER RH	1	
-37	0721112-1	BRACKET-FLAP BELLCRANK LOWER LH	1	
	0721112-2	BRACKET-FLAP BELLCRANK LOWER RH	1	
-38	0523219-2	CHANNEL-AILERON BELLCRANK SUPPORT UPPER LH	1	
	0523219-3	CHANNEL-AILERON BELLCRANK SUPPORT UPPER RH	1	
	0523219-4	CHANNEL-AILERON BELLCRANK SUPPORT LOWER LH	1	
	0523219-5	CHANNEL-AILERON BELLCRANK SUPPORT LOWER RH	1	
-39	0720005-1	STIFFENER-TRAILING EDGE INBOARD	1	
-40	1220019-13	BULKHEAD ASSEMBLY-LH	1	
	1220019-6	BULKHEAD ASSEMBLY-RH	1	
-41	0721111-3	RIB-WING LH STA 56.415	1	
	0721111-4	RIB-WING RH STA 56.415	1	
-42	0721107-1	FAIRING LH	1	
	0721107-2	FAIRING RH	1	
-43	0523407-1	BRACKET ASSEMBLY-PULLEY LOWER	1	A
	0760618-2	BRACKET ASSEMBLY-PULLEY LOWER	1	B
	0523407	BRACKET ASSEMBLY-PULLEY UPPER	1	A
	0760618-1	BRACKET ASSEMBLY-PULLEY UPPER	1	B
-44	0523700	TIP ASSEMBLY-WING	2	A
	0523701-4	TIP ASSEMBLY-WING WHEN EXHAUSTED USE 0723615-200-791	2	C
	0723615-200-791	TIP ASSEMBLY-WING	2	D
		ATTACHING PARTS		
-45	S1021Z8-8	SCREW	10	M
	AN515-8R8	SCREW	10	Q
	0423008-8	STIFFENER USE ON UPPER SIDE RH TIP & LOWER SIDE LH TIP	1	D
	0423008-9	STIFFENER USE ON UPPER SIDE LH TIP & LOWER SIDE RH TIP	1	D
		---*---		

CONTINUED ON NEXT PAGE

FIGURE AND INDEX NO.	PART NUMBER	DESCRIPTION 1 2 3 4 5 6 7	UNITS PER ASSY	USABLE ON CODE
6 -46	0523565-201-791	TIP-WING LH	1	S
	0523565-200-791	TIP-WING RH	1	S
	0523565-29-791	TIP ASSEMBLY-WING LH	1	T
	0523565-30-791	TIP ASSEMBLY-WING RH	1	T
		ATTACHING PARTS		
-47	AN515-8R8	SCREW	12	R
-48	0523565-21	STIFFENER USE ON UPPER SIDE LH TIP & LOWER SIDE RH TIP	1	R
	0523565-22	STIFFENER USE ON LOWER SIDE LH TIP & UPPER SIDE RH TIP	1	R
		---*---		
	NAS1329A06K120	NUT	5	T

NOTE. WING STRUCTURE ASSEMBLIES INCLUDE ALL WIRING NECESSARY FOR INSTALLATION.

A---SERIAL 185-0001 THRU 185-0237
B---SERIAL 185-0238 THRU 18502090
SERIAL 18051184 THRU 18052284
C---SERIAL 185-0238 THRU 185-1149
SERIAL 18051184 THRU 18051774
D---SERIAL 185-1150 THRU 185-1599
SERIAL 18051775 THRU 18052103
E---SERIAL 185-0001 THRU 185-1277
SERIAL 18051184 THRU 18051873
F---SERIAL 185-1278 THRU 18502090
SERIAL 18051874 THRU 18052284
G---SERIAL 185-0001 THRU 185-1197 & 185-1200
SERIAL 18051184 THRU 18051823
H---SERIAL 185-1198,185-1199,185-1201 THRU 185-1300
SERIAL 18051824 THRU 18051875
J---SERIAL 185-0001 THRU 185-1300
SERIAL 18051184 THRU 18051875
K---SERIAL 185-1301 THRU 185-1401
SERIAL 18051876 THRU 18051954
L---SERIAL 185-1402 THRU 18501930,
18501932 THRU 1851934
SERIAL 18051955 THRU 18052222
M---SERIAL 185-0001 THRU 185-1447
SERIAL 18051184 THRU 18051993
N---SERIAL 185-1448 THRU 18502090
SERIAL 18051994 THRU 18052284
P---SERIAL 185-0001 THRU 185-1599
SERIAL 18051184 THRU 18052103
Q---SERIAL 185-1448 THRU 185-1599
SERIAL 18051994 THRU 18052103
R---SERIAL 18501600 THRU 18502090
SERIAL 18052104 THRU 18052284
S---SERIAL 18501600 THRU 18501832
SERIAL 18052104 THRU 18052175
T---SERIAL 18501833 THRU 18502090
SERIAL 18052176 THRU 18052284
U---SERIAL 185-0001 THRU 18501886
SERIAL 18051184 THRU 18052205
V---SERIAL 18501887 THRU 18502090
SERIAL 18052206 THRU 18052284
W---SERIAL 185-0001 THRU 18501930,
18501932 THRU 18501934
SERIAL 18051184 THRU 18052222
X---SERIAL 18501931, 18501935 THRU 18502090
SERIAL 18052223 THRU 18052284
Y---SERIAL 185-0001 THRU 18501991
SERIAL 18051184 THRU 18052243
Z---SERIAL 18501992 THRU 18502090
SERIAL 18052243 THRU 18052284

Wing (Cont)

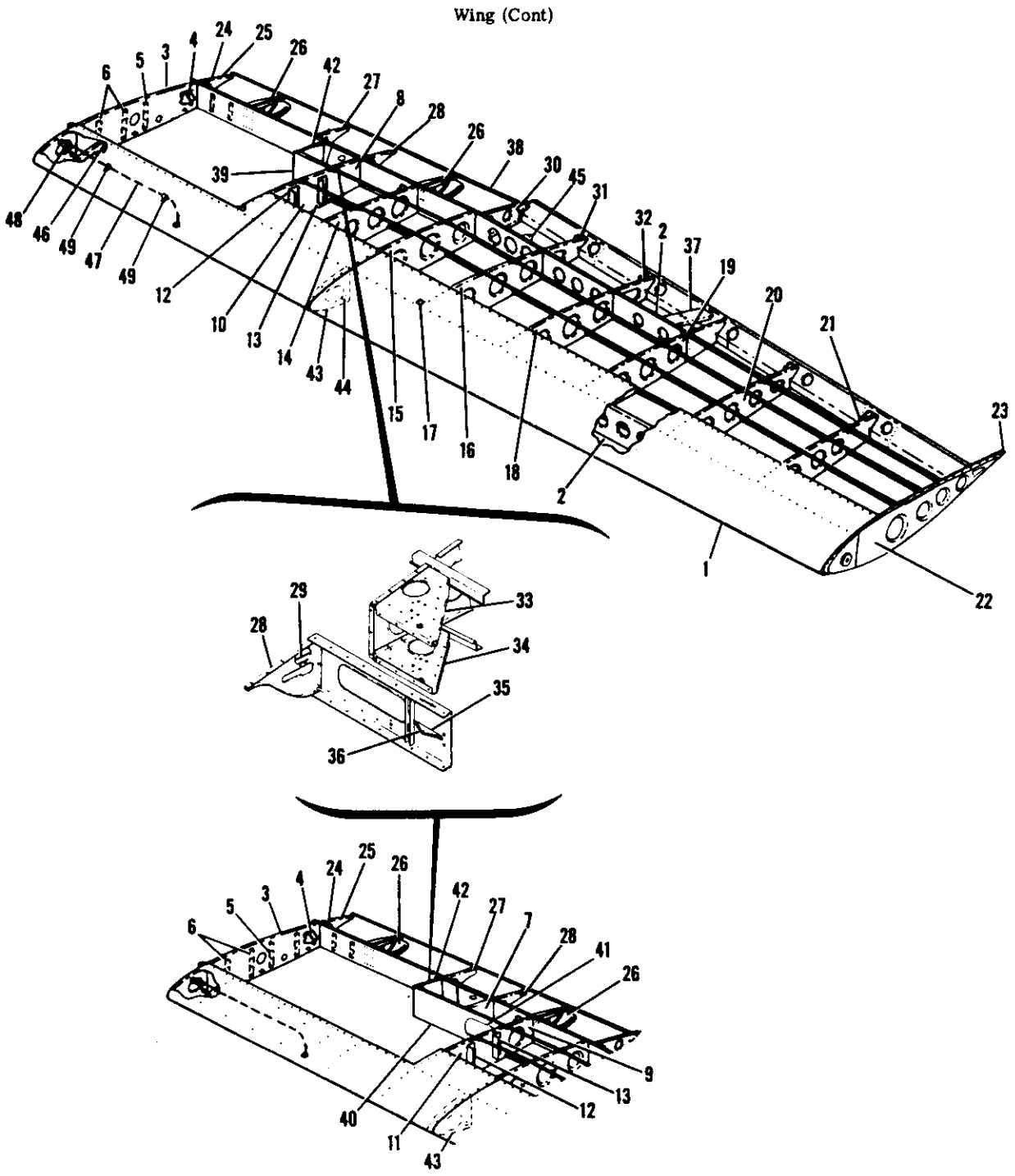

EXTENDED RANGE FUEL BAY

SERIAL 18502091 THRU 18502310
SERIAL 18052285 THRU 18052384

Figure 6A. Wing Structure Assembly

FIGURE AND INDEX NO.	PART NUMBER		DESCRIPTION 1 2 3 4 5 6 7	UNITS PER ASSY	USABLE ON CODE
6A-	0722182-21		STRUCTURE ASSEMBLY-WING LH STANDARD RANGE	1	A
	0722182-23	*	STRUCTURE ASSEMBLY-WING LH EXTENDED RANGE	1	A
	0722182-20		STRUCTURE ASSEMBLY-WING RH STANDARD RANGE	1	A
	0722182-22	*	STRUCTURE ASSEMBLY-WING RH EXTENDED RANGE	1	A
- 1	SEE FIG 8A		LEADING EDGE ASSEMBLIES-WING	1	
	SEE FIG 12A		SKINS & STRINGERS INSTALLATION	1	
- 2	SEE FIG 10A		SPAR ASSEMBLIES	1	
- 3	0722017-1		RIB ASSEMBLY-WING ROOT LH	1	
	0722017-2		RIB ASSEMBLY-WING ROOT RH	1	
- 4	1221101-3		REINFORCEMENT-WING ROOT RIB LH	1	
	1221101-4		REINFORCEMENT-WING ROOT RIB RH	1	
- 5	0721100-6		ANGLE-STIFFENER	1	
- 6	0721100-7		ANGLE-STIFFENER	2	
- 7	1220019-18	*	RIB-LH	1	
	0720617-5	*	RIB-RH	1	
- 8	0721111-21		RIB ASSEMBLY-WING FUEL BAY LH	1	
	0721111-25		RIB ASSEMBLY-WING FUEL BAY RH	1	
- 9	1220019-19	*	RIB ASSEMBLY-LH STA 85.625	1	
	1220019-20	*	RIB ASSEMBLY-RH STA 85.625	1	
	NAS697A08		NUTPLATE	2	
-10	0721111-23		RIB-WING FUEL BAY LH	1	
	0721111-24		RIB-WING FUEL BAY RH	1	
-11	1220019-21	*	RIB-LH STA 85.625	1	
	1220019-22	*	RIB-RH STA 85.625	1	
-12	0721100-7		ANGLE-STIFFENER	2	
-13	0721100-6		ANGLE-STIFFENER	1	
-14	0722201-1		RIB-CENTER STA 85.375	1	
-15	0722194-1		RIB ASSEMBLY-CENTER WING LH STA 100.00	1	
	0722194-2		RIB ASSEMBLY-CENTER WING RH STA 100.00	1	
-16	0722195-1		RIB-CENTER STA 118.00	1	
-17	0523511-6		SPACER	1	
-18	0722196-2		RIB-CENTER STA 136.00	1	
-19	0722197-1		RIB ASSEMBLY-CENTER WING LH STA 154.00	1	
	0722197-2		RIB ASSEMBLY-CENTER WING RH STA 154.00	1	
	0724108-1		BRACKET	1	
-20	0722198-1		RIB-CENTER STA 172.00	1	
-21	0722199-1		RIB-CENTER STA 190.00	1	
-22	0722200-1		RIB ASSEMBLY-CENTER LH WING STA 208.00	1	
	0722200-2		RIB ASSEMBLY-CENTER RH WING STA 208.00	1	
	NAS686A08		NUTPLATE	10	
-23	0721107-1		FAIRING-TRAILING EDGE LH STA 208.00	1	
	0721107-2		FAIRING-TRAILING EDGE RH STA 208.00	1	
-24	0523232-2		RIB-TRAILING EDGE ROOT	1	
-25	NAS395-14-3		NUT	2	
-26	1221010-15		RIB ASSEMBLY-FLAP TRACK STA 39.00 & 85.88	2	
			ATTACHING PARTS		
	NAS221-8		SCREW	2	
	AN960-10		WASHER	2	
	MS21044N3		NUT	2	
			---*---		
-27	0523233-6		RIB-TRAILING EDGE LH STA 56.53	1	
	0523233-20		RIB-TRAILING EDGE RH STA 56.53	1	
-28	0523233-7		RIB ASSEMBLY-TRAILING EDGE STA 72.602	1	
-29	0523233-3		RUB STRIP	1	
-30	0523230		RIB ASSEMBLY-TRAILING EDGE WING LH STA 100.50	1	
	0523230-1		RIB ASSEMBLY-TRAILING EDGE WING RH STA 100.50	1	
	0523230-4		ANGLE-WING LH	1	
	0523230-5		ANGLE-WING RH	1	
-31	0523511-4		RIB-TRAILING EDGE STA 118.00	1	
-32	0523512-4		RIB-TRAILING EDGE STA 136.00	1	
-33	0721117-3		BRACKET-FLAP BELLCRANK UPPER LH	1	
	0720606-5		DOUBLER-FLAP ACTUATOR UPPER RH STD RANGE ONLY	1	
	0720606-3	*	DOUBLER-FLAP ACTUATOR UPPER RH	1	
-34	0721117-1		BRACKET-FLAP BELLCRANK LOWER LH	1	
	0720606-8		DOUBLER-FLAP ACTUATOR LOWER RH STD RANGE ONLY	1	
	0720606-10	*	DOUBLER-FLAP ACTUATOR LOWER RH	1	

CONTINUED ON NEXT PAGE

FIGURE AND INDEX NO.	PART NUMBER	DESCRIPTION 1 2 3 4 5 6 7	UNITS PER ASSY	USABLE ON CODE
6A-35	0760618-1	BRACKET-FLAP PULLEY UPPER LH	1	
		ATTACHING PARTS		
	AN520-10R8	SCREW	2	
	MS21044N3	NUT	2	
		---*---		
	0523407	BRACKET-FLAP PULLEY UPPER RH	1	
-36	0760618-2	BRACKET-FLAP PULLEY LOWER LH	1	
		ATTACHING PARTS		
	AN520-10R8	SCREW	2	
	MS21044N3	NUT	2	
		---*---		
	0523407-1	BRACKET-FLAP PULLEY LOWER RH	1	
-37	0523219-2	CHANNEL-AILERON BELLCRANK SUPPORT UPPER LH	1	
	0523219-3	CHANNEL-AILERON BELLCRANK SUPPORT UPPER RH	1	
	0523219-7	CHANNEL-AILERON BELLCRANK SUPPORT LOWER LH	1	
	0523219-6	CHANNEL-AILERON BELLCRANK SUPPORT LOWER RH	1	
-38	0720005-1	STIFFENER-TRAILING EDGE INBOARD	1	
-39	0722012-11	BULKHEAD ASSEMBLY-LH	1	
	0722012-16	BULKHEAD ASSEMBLY-RH	1	
-40	1220019-13 *	BULKHEAD ASSEMBLY-LH	1	
	1220019-35 *	BULKHEAD ASSEMBLY-RH	1	
-41	1220019-17 *	CUP RH ONLY	1	
-42	0721111-3	RIB-LH STA 56.531	1	
	0721111-33	RIB-RH STA 56.531	1	
-43	0722187-1	RIB-LEADING EDGE LH STA 100.00 WEU 0722187-7	1	B
	0722187-7	RIB-LEADING EDGE LH STA 100.00	1	C
	0722187-2	RIB-LEADING EDGE RH STA 100.00 WEU 0722187-8	1	B
	0722187-8	RIB-LEADING EDGE RH STA 100.00	1	C
-44	S1291-8	GROMMET	1	
-45	0523408	BRACKET-AILERON PULLEY	1	
-46	0722184-3	SHIM BETWEEN LE RIB & SPAR STA 32.75	1	
-47	S1071-1	TUBE-63.7 IN LG BKT REF S1071-1-63.7	1	
		ATTACHING PARTS		
	S1130-1	NUT	2	
	S1131-1	INSERT	2	
-48	AN742D4	CLAMP	1	
	S1021Z8-8	SCREW	1	
	NAS395-16-3	NUT	1	
-49	0422292	BRACKET	2	
	AN742D4	CLAMP	2	
	S1021Z8-8	SCREW	2	
	NAS395-16-3	NUT	2	
		---*---		

NOTE. *DENOTES PARTS USED ON WING WITH EXTENDED RANGE FUELTANK.

A---SERIAL 18502091 THRU 18502310
SERIAL 18052285 THRU 18052384
B---SERIAL 18502091 THRU 18502271
SERIAL 18052285 THRU 18052373
C---SERIAL 18502272 THRU 18502310
SERIAL 18052373 THRU 18052384

Wing (Cont)

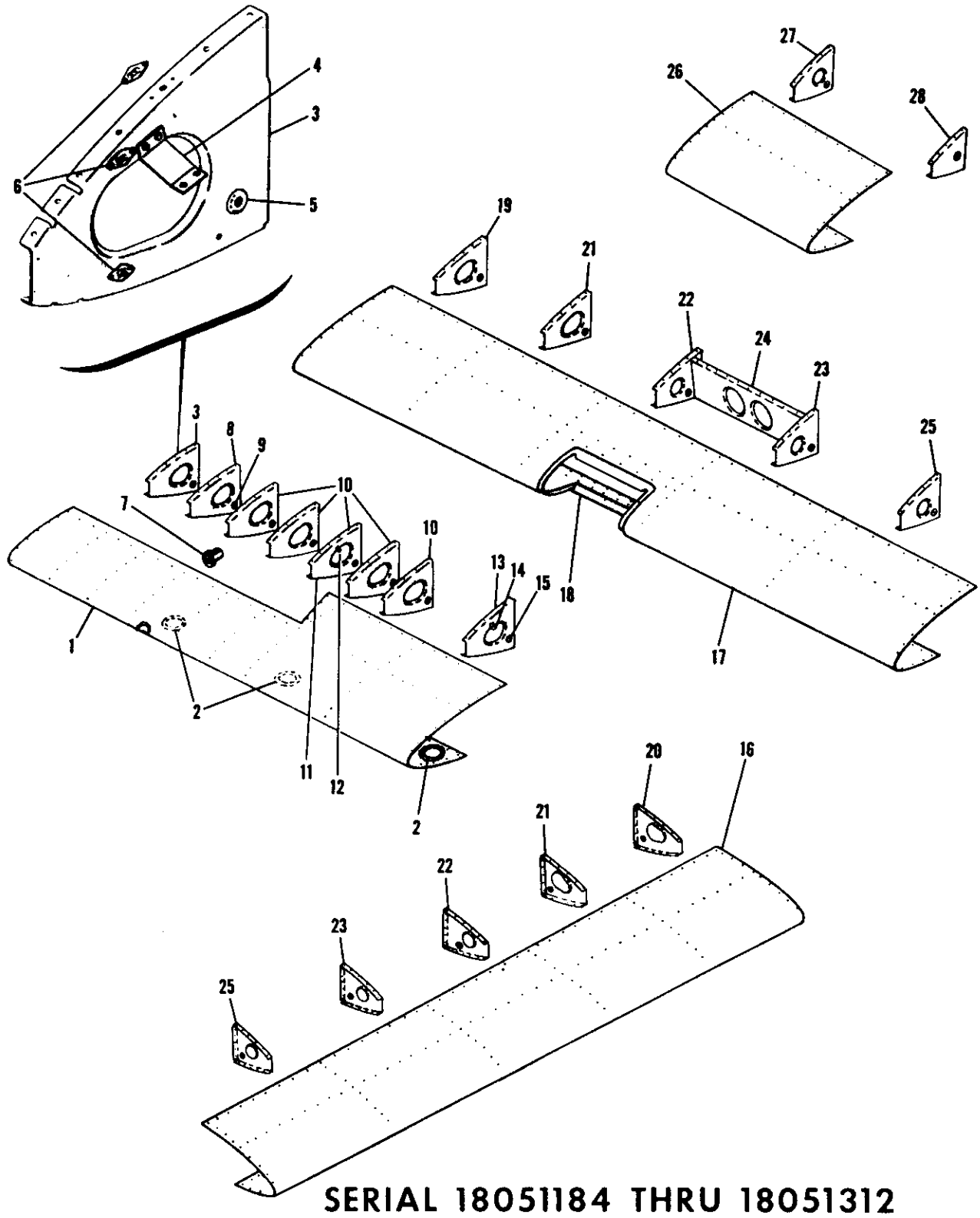

SERIAL 18051184 THRU 18051312

Figure 7. Wing Leading Edge Assembly

FIGURE AND INDEX NO.	PART NUMBER	DESCRIPTION 1 2 3 4 5 6 7	UNITS PER ASSY	USABLE ON CODE
7 -	*	LEADING EDGE ASSEMBLIES	NP	A
	0792000-9	LEADING EDGE ASSEMBLY-INBOARD LH STA 23.625 TO 100.0	1	
	0792000-8	LEADING EDGE ASSEMBLY-INBOARD LH STA 23.625 TO 100.0	1	
- 1	0720001-43	SKIN-LEADING EDGE INBOARD LH STA 23.625 TO 100.0	1	
	0720001-42	SKIN-LEADING EDGE INBOARD RH STA 23.625 TO 100.0	1	
- 2	S226-2	DOUBLER-INSPECTION OPENING	3	
	NAS444-14	NUTPLATE TIN A6162-8Z-3	9	
- 3	0523107-2	RIB ASSEMBLY-LEADING EDGE NOSE LH STA 23.625	1	
	0523107-3	RIB ASSEMBLY-LEADING EDGE NOSE RH STA 23.625	1	
- 4	0422291	BRACKET LH WING ONLY	1	
- 5	MS20230A2	GROMMET	2	
- 6	NAS444-14	NUTPLATE TIN A6162-8Z-3	2	
- 7	0413157	SCOOP-CABIN AIR VENT	1	
- 8	0523107	RIB ASSEMBLY-NOSE STA 32.5	1	
- 9	MS20230A2	GROMMET	1	
-10	0523108	RIB ASSEMBLY-WING NOSE LH STA 40.375,48.75 & 64.5	3	
	0523108	RIB ASSEMBLY-WING NOSE RH STA 40.375, 4875, 57.125 & 64.5	4	
	0523111-2	RIB ASSEMBLY-NOSE STA 71.97	1	
	MS20230A2	GROMMET	1	
-11	0523108-3	RIB ASSEMBLY-WING LEADING EDGE LH STA 57.125	1	
-12	0422292	BRACKET LH WING ONLY	1	
	MS20230A2	GROMMET	1	
-13	0523111-2	RIB ASSEMBLY-LEADING EDGE STA 85.625	1	
-14	0422292	BRACKET LH WING ONLY	1	
-15	MS20230A2	GROMMET	1	
	0720001-51	LEADING EDGE ASSEMBLY-WING CENTER LH STA 100.0 TO 190.0 -	1	
	0720001-54	LEADING EDGE ASSEMBLY-WING CENTER RH STA 100.0 TO 190.0 -	1	
-16	0720001-12	SKIN-LEADING EDGE RH STA 100.0 TO 190.0	1	
-17	0720601-205	SKIN ASSEMBLY-LEADING EDGE LH STA 100.0 TO 190.0	1	
-18	0722100-1	DOUBLER ASSEMBLY-LANDING LIGHT OPENING LH	1	
	NAS444-14	NUTPLATE TIN A6162-8Z-3	14	
-19	0523110-5	RIB ASSEMBLY-WING LEADING EDGE LH STA 100.0	1	
-20	0523110-2	RIB ASSEMBLY-WING LEADING EDGE RH STA 100.0	1	
	MS20230A2	GROMMET	1	
-21	0523542-1	RIB ASSEMBLY-NOSE STA 118.0	1	
	MS20230A2	GROMMET	1	
-22	0523512-5	RIB ASSEMBLY-NOSE STA 136-0	1	
	MS20230A2	GROMMET	1	
-23	0523513-4	RIB ASSEMBLY-NOSE STA 154.0	1	
	MS20230A2	GROMMET	1	
-24	0523106-4	BRACKET ASSEMBLY-LANDING LIGHT LH WING ONLY	1	
	NAS680A08	NUTPLATE	10	
-25	0523514-4	RIB ASSEMBLY-NOSE STA 172.0	1	
	MS20230A2	GROMMET	1	
	0720001-52	LEADING EDGE ASSEMBLY-WING LH	1	
	0720001-55	LEADING EDGE ASSEMBLY-WING RH	1	
-26	0720601-15	SKIN-WING LH STA 190.0 TO 205.0	1	
	0720601-16	SKIN-WING RH STA 190.0 TO 205.0	1	
-27	0523515-4	RIB ASSEMBLY-NOSE STA 190.0	1	
	MS20230A2	GROMMET	1	
-28	0720608-2	RIB ASSEMBLY-NOSE STA 208.0	1	
	MS20230A2	GROMMET	1	

NOTE. *FOR 180 & 185 EXTENDED RANGE & 185 STANDARD WING LEADING EDGE SEE FIGURE 8

A---SERIAL 18051184 THRU 18051312 STANDARD WING LEADING EDGE ONLY

Wing (Cont)

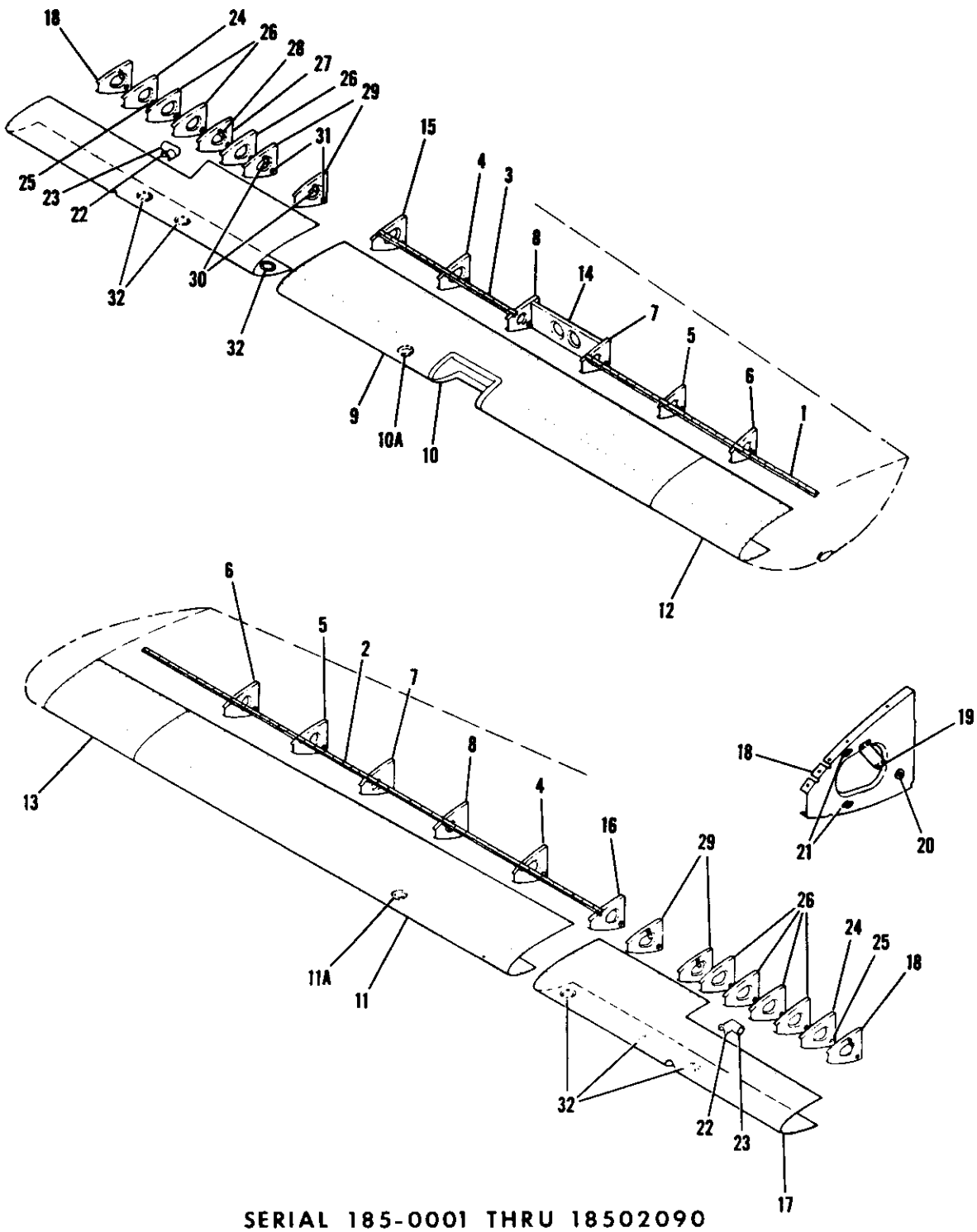

SERIAL 185-0001 THRU 18502090
SERIAL 18051184 THRU 18052284

Figure 8. Wing Leading Edge Assembly

FIGURE AND INDEX NO.	PART NUMBER	DESCRIPTION 1 2 3 4 5 6 7	UNITS PER ASSY	USABLE ON CODE
8 -	*	LEADING EDGE ASSEMBLIES	NP	A
	*	LEADING EDGE ASSEMBLIES-EXTENDED RANGE	NP	B
	1220002-37	LEADING EDGE ASSEMBLY-CENTER LH STA 100.0 TO 208.0	1	
	1220002-36	LEADING EDGE ASSEMBLY-CENTER RH STA 100.0 TO 208.0	1	
- 1	0523541-61	STRINGER-LH	1	
- 2	0523541-62	STRINGER-RH	1	
- 3	0523541-63	STRINGER-LH	1	
- 4	0720602-1	RIB ASSEMBLY-NOSE STA 118.00	1	
	MS2030A2	GROMMET	1	
- 5	0720607-3	RIB ASSEMBLY STA 172.00	1	
	MS20230A2	GROMMET	1	
- 6	0720607-4	RIB ASSEMBLY STA 190.00	1	
	MS20230A2	GROMMET	1	
- 7	0720608-3	RIB ASSEMBLY STA 154.00	1	
	MS20230A2	GROMMET	1	
- 8	0720609-1	RIB ASSEMBLY-NOSE STA 136.00	1	
	MS20230A2	GROMMET	1	
- 9	1220002-215	SKIN ASSEMBLY-LEADING EDGE LH	1	
-10	0722100-1	DOUBLER ASSEMBLY-LANDING LIGHT	1	
-10A	S226-5F	DOUBLER ASSEMBLY-INSPECTION OPENING	1	
-11	1220002-38	SKIN-LEADING EDGE RH WHEN EXHAUSTED USE 1220002-84	1	J
	1220002-84	SKIN ASSEMBLY-LEADING EDGE RH	1	K
-11A	S226-5F	DOUBLER ASSEMBLY-INSPECTION OPENING	1	K
-12	1220002-41	SKIN-LEADING EDGE LH	1	
-13	1220002-40	SKIN-LEADING EDGE RH	1	
-14	0523106-4	BRACKET ASSEMBLY-LANDING LIGHT LH WING ONLY	1	
	NAS680A08	NUTPLATE	10	
-15	0720610-1	RIB ASSEMBLY-NOSE LH STA 100.00	1	
-16	0720610-2	RIB ASSEMBLY-NOSE RH STA 100.00	1	
	MS20230A2	GROMMET	1	
	1220002-207	LEADING EDGE ASSEMBLY-INBOARD LH	1	E
	1220002-51	LEADING EDGE ASSEMBLY-INBOARD LH	1	F
	1220003-209	LEADING EDGE ASSEMBLY-INBOARD LH EXTENDED RANGE ONLY	1	G
	1220003-18	LEADING EDGE ASSEMBLY-INBOARD LH EXTENDED RANGE ONLY	1	H
	1220002-50	LEADING EDGE ASSEMBLY-INBOARD RH	1	A
	1220004-18	LEADING EDGE ASSEMBLY-INBOARD RH EXTENDED RANGE ONLY	1	B
-17	1220002-53	SKIN-LEADING EDGE INBOARD LH WHEN EXHAUSTED USE 1220002-77	1	C
	1220002-77	SKIN-LEADING EDGE INBOARD LH	1	D
	1220002-79	SKIN-LEADING EDGE INBOARD LH	1	F
	1220003-27	SKIN-LEADING EDGE INBOARD LH EXTENDED RANGE ONLY	1	G
	1220003-28	SKIN-LEADING EDGE INBOARD LH EXTENDED RANGE ONLY	1	H
	1220002-52	SKIN-LEADING EDGE INBOARD RH	1	A
	1220004-17	SKIN-LEADING EDGE INBOARD RH EXTENDED RANGE ONLY	1	B
-18	0523107-2	RIB ASSEMBLY-LEADING EDGE NOSE LH STA 23.625	1	
	0523107-3	RIB ASSEMBLY-LEADING EDGE NOSE RH STA 23.625	1	
-19	0422291	BRACKET LH WING ONLY	1	
-20	MS20230A2	GROMMET	2	
-21	NAS444-14-3	NUTPLATE	2	
-22	0413157	SCOOP-CABIN AIR VENT	1	
-23	0450314	FITTING-CABIN AIR VENT	1	
		ATTACHING PARTS		
	S1021Z8-8	SCREW	1	
	NAS446-4-3	NUT	1	
		---*---		
-24	0523107	RIB ASSEMBLY-NOSE STA 32.5	1	
-25	MS20230A2	GROMMET	1	
-26	0523108	RIB ASSEMBLY-LH STA 40.375, 48.75, & 64.5	3	
	MS20230A2	GROMMET	1	
-27	0523108-3	RIB ASSEMBLY-WING LEADING EDGE LH STA 57.125	1	
-28	0422292	BRACKET LH WING ONLY	1	
	MS20230A2	GROMMET	1	

CONTINUED ON NEXT PAGE

FIGURE AND INDEX NO.	PART NUMBER	DESCRIPTION 1 2 3 4 5 6 7	UNITS PER ASSY	USABLE ON CODE
8 -29	0523111-2	RIB ASSEMBLY-NOSE STA 71.977 & 85.625	2	
-30	0422292	BRACKET	1	
-31	MS20230A2	GROMMET	1	
-32	S226-5F	DOUBLER-INSPECTION OPENING	3	
	S1860-2A	NUT	3	
		NOTE. *FOR 180 STANDARD WING LEADING EDGE SERIALS 18051184 THRU 18051312 SEE FIGURE 7		
		A---SERIAL 185-0001 THRU 18502090 STD WING LEADING EDGE SERIAL 18051313 THRU 18052284 STD WING LEADING EDGE		
		B---SERIAL 185-0001 THRU 18502090 EXTENDED RANGE WING LEADING EDGE ONLY SERIAL 18051184 THRU 18052284 EXTENDED RANGE WING LEADING EDGE ONLY		
		C---SERIAL 185-0001 THRU 185-0967 STD WING LEADING EDGE SERIAL 18051313 THRU 18051607 STD WING LEADING EDGE		
		D---SERIAL 185-0968 THRU 185-1197 & 185-1200 STANDARD WING LEADING EDGE SERIAL 18051608 THRU 18051823 STD WING LEADING EDGE		
		E---SERIAL 185-0001 THRU 185-1197 & 185-1200 STANDARD WING LEADING EDGE SERIAL 18051313 THRU 18051823 STD WING LEADING EDGE		
		F---SERIAL 185-1198, 185-1199, 185-1201 THRU 18502090 STANDARD WING LEADING EDGE SERIAL 18051824 THRU 18052284 STD WING LEADING EDGE		
		G---SERIAL 185-0001 THRU 185-1197 & 185-1200 EXTENDED RANGE WING LEADING EDGE ONLY SERIAL 18051184 THRU 18051823 EXTENDED RANGE WING LEADING EDGE ONLY		
		H---SERIAL 185-1198, 185-1199, 185-1201 THRU 18502090 EXTENDED RANGE WING LEADING EDGE ONLY SERIAL 18051824 THRU 18052284 EXTENDED RANGE WING LEADING EDGE ONLY		
		J---SERIAL 185-0001 THRU 185-1300 SERIAL 18051313 THRU 18051875 STD WING LEADING EDGE SERIAL 18051184 THRU 18051875 EXTENDED RANGE LEADING EDGE		
		K---SERIAL 185-1301 THRU 18502090 SERIAL 18051876 THRU 18052284		

Wing (Cont)

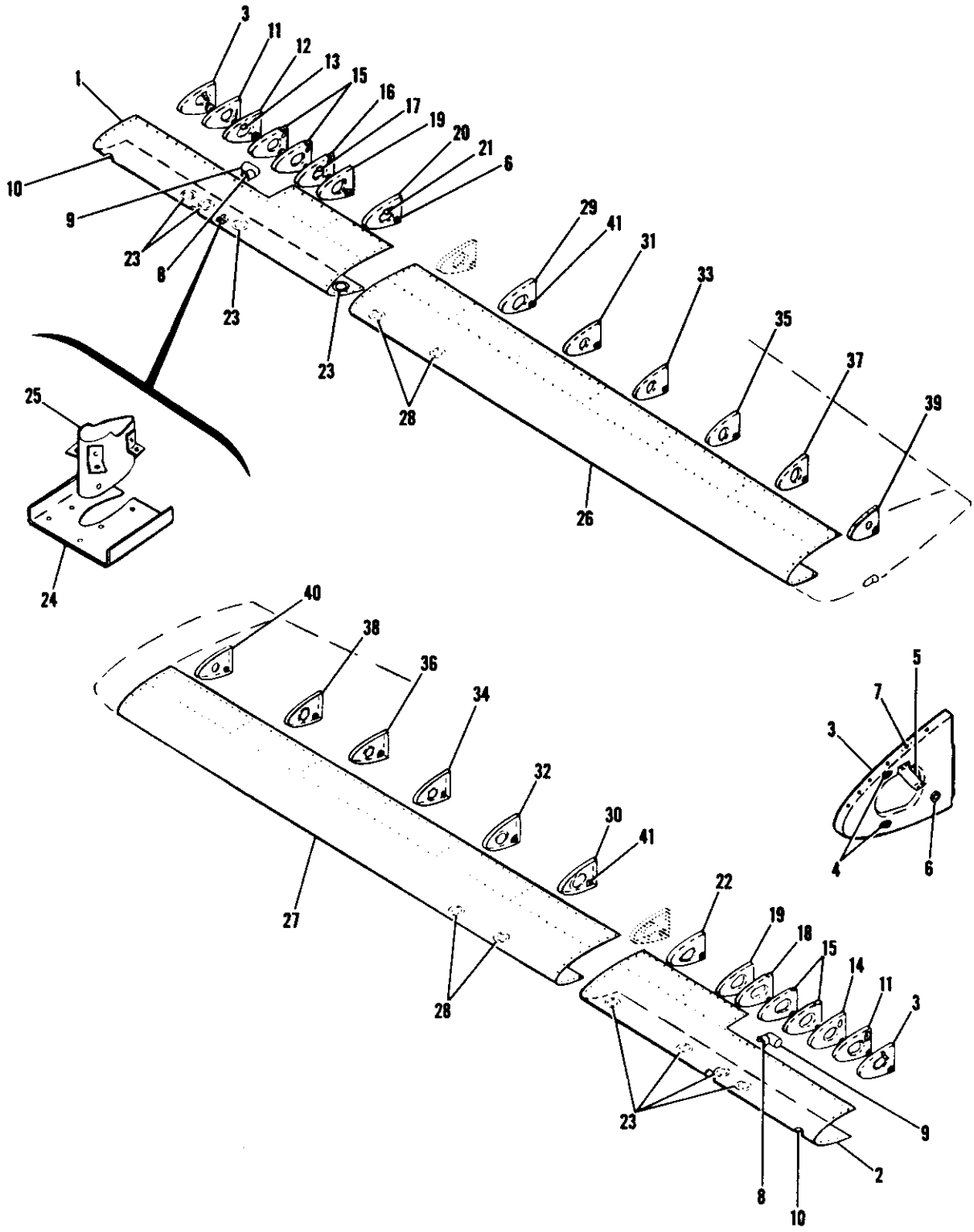

SERIAL 18502091 THRU 18502310
SERIAL 18052285 THRU 18052384

Figure 8A. Wing Leading Edge Assembly

FIGURE AND INDEX NO.	PART NUMBER	DESCRIPTION 1 2 3 4 5 6 7	UNITS PER ASSY	USABLE ON CODE
8A-	0722180-29	LEADING EDGE ASSY-WING INBOARD LH STANDARD RANGE ----------	1	A
	0722180-30	LEADING EDGE ASSY-WING INBOARD RH STANDARD RANGE ----------	1	A
	0722180-31	LEADING EDGE ASSY-WING INBOARD LH EXTENDED RANGE ----------	1	A
	0722180-32	LEADING EDGE ASSY-WING INBOARD RH EXTENDED RANGE ----------	1	A
- 1	0722180-37	SKIN-LEADING EDGE INBOARD LH STANDARD RANGE ----------	1	
	0722180-39	SKIN-LEADING EDGE INBOARD LH EXTENDED RANGE ----------	1	
- 2	0722180-30	SKIN-LEADING EDGE INBOARD RH STANDARD RANGE ----------	1	
	0722180-40	SKIN-LEADING EDGE INBOARD RH EXTENDED RANGE ----------	1	
- 3	0722183-1	RIB ASSEMBLY-NOSE LH STA 24.375 ----------	1	
	0722183-2	RIB ASSEMBLY-NOSE RH STA 24.375 ----------	1	
- 4	S1863-3	NUTPLATE ----------	2	
- 5	0422291	BRACKET-PITOT LH ONLY ----------	1	
- 6	S1291-8	GROMMET ----------	8	
- 7	S1860-2A	NUTPLATE UPPER ----------	1	
	A6204-8Z3	NUTPLATE LOWER ----------	1	
- 8	0722203-1	SCOOP-CABIN AIR VENT ----------	1	
- 9	0450314-1	FITTING ASSEMBLY-CABIN AIR VENT ----------	1	
		ATTACHING PARTS		
	S1021Z8-8	SCREW ----------	1	
	NAS446-4-3	NUT ----------	1	
		---*---		
-10	1200637-5	SCOOP ASSEMBLY-AIR ----------	1	
	0700692-1	CAP-AIR INLET ----------	1	
		ATTACHING PARTS		
	NAS397-22	CLAMP ----------	1	
	AN960-4	WASHER ----------	4	
		---*---		
-11	0722184-2	RIB-NOSE STA 32.75 ----------	1	
-12	0722185-5	RIB ASSEMBLY-NOSE LH STA 40.125 ----------	1	
-13	0422292	BRACKET ----------	1	
-14	0722185-1	RIB-NOSE RH STA 40.125 ----------	1	
-15	0722185-2	RIB-NOSE STA 49.00 & STA 57.37 ----------	2	
-16	0722185-6	RIB ASSEMBLY-NOSE LH STA 64.25 ----------	1	
-17	0422292	BRACKET ----------	1	
-18	0722185-2	RIB-NOSE RH STA 64.25 ----------	1	
-19	0722186-1	RIB-NOSE STA 72.352 ----------	1	
-20	0722186-3	RIB ASSEMBLY-NOSE LH STA 85.375 ----------	1	
-21	0422292	BRACKET ----------	1	
-22	0722186-1	RIB-NOSE RH STA 85.375 ----------	1	
-23	S226-2	DOUBLER ASSEMBLY-ACCESS ----------	4	
	NAS444-14-3	NUT ----------	3	
-24	0721114-3	DOUBLER-PITOT REINFORCEMENT LH ONLY ----------	1	
-25	0721115-1	CONNECTOR ASSEMBLY-PITOT TUBE LH ONLY ----------	1	
	0722180-7	LEADING EDGE ASSY-WING OUTBOARD LH WEU 0722180-51 ---------	1	B
	0722180-51	LEADING EDGE ASSY-WING OUTBOARD LH ----------	1	C
	0722180-8	LEADING EDGE ASSY-WING OUTBOARD RH WEU 0722180-52 ---------	1	B
	0722180-52	LEADING EDGE ASSY-WING OUTBOARD RH ----------	1	C
-26	0722180-23	SKIN-LEADING EDGE LH WEU 0722180-49 ----------	1	B
	0722180-49	SKIN-LEADING EDGE LH ----------	1	C
-27	0722180-24	SKIN-LEADING EDGE RH WEU 0722180-50 ----------	1	B
	0722180-50	SKIN-LEADING EDGE RH ----------	1	C
-28	S226-2	DOUBLER ASSEMBLY-ACCESS ----------	2	
	NAS444-14-3	NUT ----------	3	
-29	0722188-1	RIB-NOSE LH STA 118.00 ----------	1	
-30	0722188-2	RIB-NOSE RH STA 118.00 ----------	1	
-31	0722189-1	RIB-NOSE LH STA 136.00 ----------	1	
-32	0722189-2	RIB-NOSE RH STA 136.00 ----------	1	
-33	0722190-1	RIB-NOSE LH STA 154.00 ----------	1	
-34	0722190-2	RIB-NOSE RH STA 154.00 ----------	1	
-35	0722191-1	RIB-NOSE LH STA 172.00 ----------	1	
-36	0722191-2	RIB-NOSE RH STA 172.00 ----------	1	
-37	0722192-1	RIB-NOSE LH STA 190.00 ----------	1	
-38	0722192-2	RIB-NOSE RH STA 190.00 ----------	1	
-39	0722193-1	RIB ASSEMBLY-NOSE LH STA 208.00 ----------	1	
-40	0722193-2	RIB ASSEMBLY-NOSE RH STA 208.00 ----------	1	
	NAS696A08	NUTPLATE ----------	2	
-41	S1291-8	GROMMET ----------	6	
		A---SERIAL 18502091 THRU 18502310		
		SERIAL 18052285 THRU 18052384		
		B---SERIAL 18502091 THRU 18502271		
		SERIAL 18052285 THRU 18052373		
		C---SERIAL 18502272 THRU 18502310		
		SERIAL 18052374 THRU 18052384		

Wing (Cont)

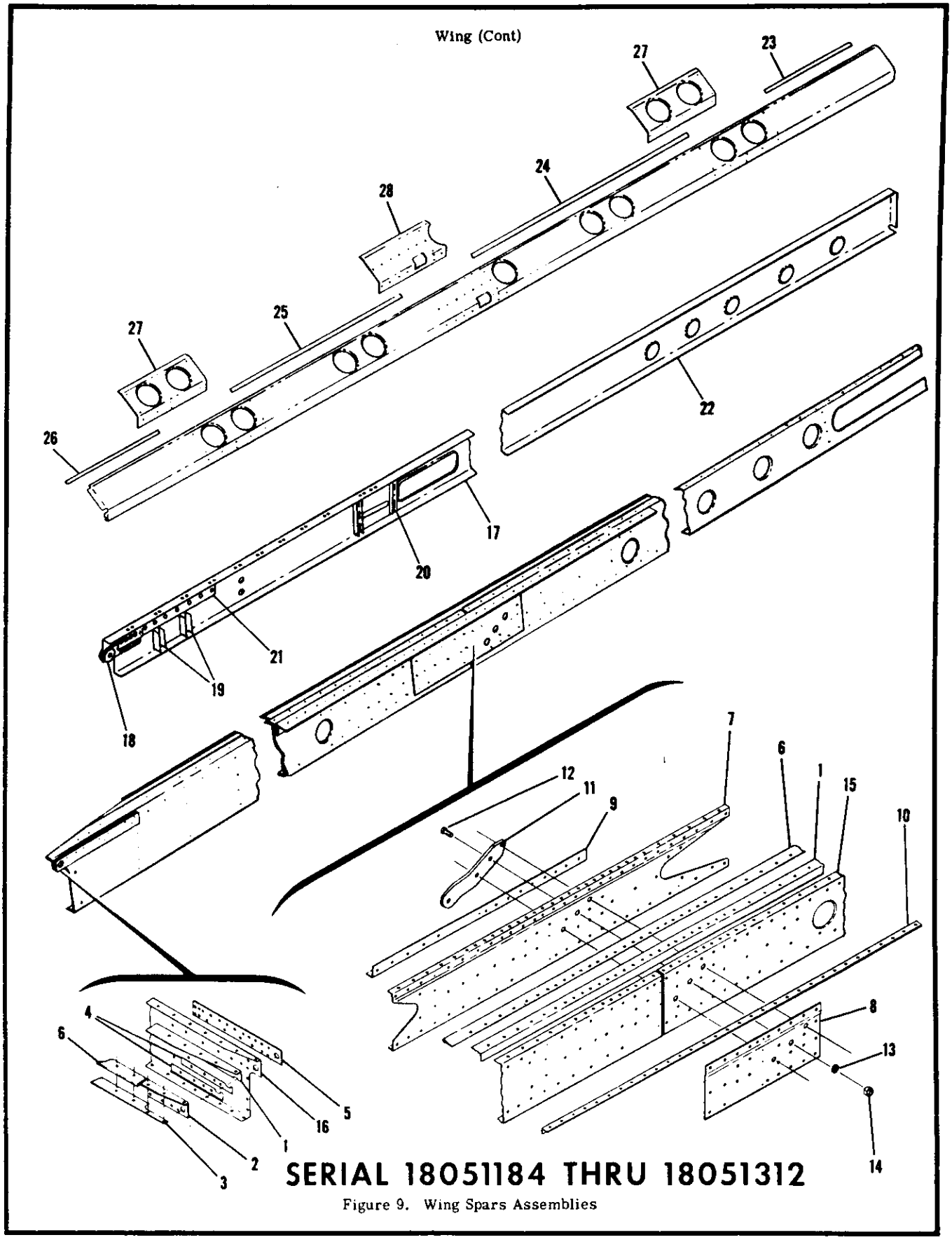

SERIAL 18051184 THRU 18051312

Figure 9. Wing Spars Assemblies

FIGURE AND INDEX NO.	PART NUMBER	DESCRIPTION 1 2 3 4 5 6 7	UNITS PER ASSY	USABLE ON CODE
9 -	*	SPAR ASSEMBLIES-WING	NP	A
	0721400-21	SPAR ASSEMBLY-WING FRONT LH	1	
	0721400-22	SPAR ASSEMBLY-WING FRONT RH	1	
- 1	0721400-3	ANGLE-FRONT SPAR CAP LH	1	
	0721400-4	ANGLE-FRONT SPAR CAP RH	1	
- 2	0523309	ANGLE-FRONT SPAR LH	1	
	0523309-1	ANGLE-FRONT SPAR RH	1	
- 3	0721400-10	SPACER-FRONT SPAR	1	
- 4	0721400-9	SPACER-FRONT SPAR WHEN EXHAUSTED USE 0721400-35	2	
	0721400-35	SPACER-FRONT SPAR .125 THICK	1	
- 5	0523308	PLATE-FRONT SPAR REINFORCEMENT	1	
- 6	0523315	PLATE-FRONT SPAR CAP LH	1	
	0523315-1	PLATE-FRONT SPAR CAP RH	1	
- 7	0721400-13	CHANNEL-FRONT SPAR SPLICE LH	1	
	0721400-14	CHANNEL-FRONT SPAR SPLICE RH	1	
- 8	0721400-17	PLATE-FRONT SPAR SPLICE CHANNEL LH	1	
	0721400-18	PLATE-FRONT SPAR SPLICE CHANNEL RH	1	
- 9	0523316	ANGLE-FRONT SPAR SPLICE LH	1	
	0523316-1	ANGLE-FRONT SPAR SPLICE RH	1	
-10	0523321-3	ANGLE-FRONT SPAR FORWARD CAP STRIP LH	1	
	0523321-4	ANGLE-FRONT SPAR FORWARD CAP STRIP RH	1	
-11	0523306	FITTING-FRONT SPAR STRUT	1	
		ATTACHING PARTS		
-12	AN5-7A	BOLT	3	
-13	AN960-516	WASHER	3	
-14	NAS679A5	NUT	3	
		---*---		
-15	0721400-19	CHANNEL-FRONT SPAR OUTBOARD LH	1	
	0721400-20	CHANNEL-FRONT SPAR OUTBOARD RH	1	
-16	0721400-23	CHANNEL-FRONT SPAR INBOARD LH WHEN EXHAUSTED	1	
		USE 0721400-27		
	0721400-27	CHANNEL-FRONT SPAR INBOARD LH	1	
	0721400-24	CHANNEL-FRONT SPAR INBOARD RH WHEN EXHAUSTED	1	
		USE 0721400-28		
	0721400-28	CHANNEL-FRONT SPAR INBOARD RH	1	
	0523400-55	SPAR ASSEMBLY-WING REAR LH	1	
	0523400-54	SPAR ASSEMBLY-WING REAR RH	1	
-17	0523400-52	SEGMENT ASSEMBLY-REAR SPAR LH STA 23.0 TO 100.0	1	
	0523400-53	SEGMENT ASSEMBLY-REAR SPAR RH STA 23.0 TO 100.0	1	
-18	0422229-3	FITTING-WING SPAR REINFORCEMENT WHEN	2	
		EXHAUSTED USE 0422229-11		
	0422229-11	FITTING-WING SPAR REINFORCEMENT	2	
-19	0523409-1	CHANNEL-REINFORCEMENT	2	
-20	0523409	CHANNEL-REINFORCEMENT	3	
-21	0523400-20	ANGLE-REAR SPAR REINFORCEMENT LH	1	
	0523400-21	ANGLE-REAR SPAR REINFORCEMENT RH	1	
-22	0523406	SEGMENT-REAR SPAR OUTBOARD LH STA 100.0 TO 154.0	1	
		WHEN EXHAUSTED USE 0523406-3		
	0523406-3	SEGMENT-REAR SPAR OUTBOARD LH STA 100.0 TO 154.0	1	
	0523406-1	SEGMENT-REAR SPAR OUTBOARD RH STA 100.0 TO 154.0	1	
		WHEN EXHAUSTED USE 0523406-2		
	0523406-2	SEGMENT-REAR SPAR OUTBOARD RH STA 100.0 TO 154.0	1	
	0523005-50	SPAR ASSEMBLY-OUTBOARD AUXILIARY LH	1	
	0523005-51	SPAR ASSEMBLY-OUTBOARD AUXILIARY RH	1	
-23	0523813-3	FILLER-TRAILING EDGE	1	
-24	0523813-2	FILLER-TRAILING EDGE	1	
-25	0523813-4	FILLER-TRAILING EDGE	1	
-26	0523813-5	FILLER-TRAILING EDGE	1	
-27	0523216	REINFORCEMENT	2	
-28	0523215	REINFORCEMENT-WING LH	1	
	0523215-1	REINFORCEMENT-WING RH	1	

NOTE. *FOR 180 & 185 EXTENDED RANGE & 185 STANDARD WING SPAR ASSEMBLIES SEE FIGURE 10

A---SERIAL 18051184 THRU 18051312 STANDARD WING SPARS

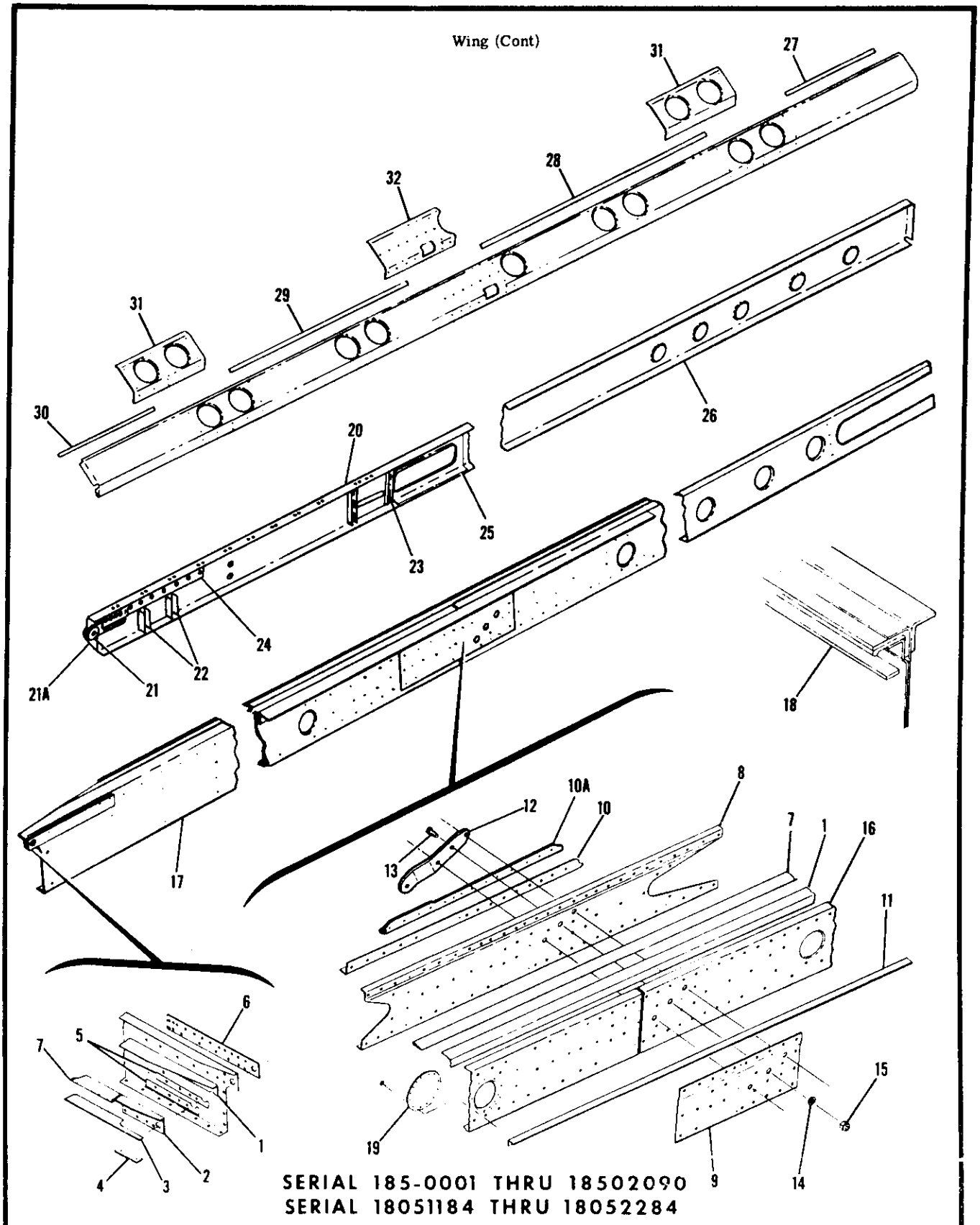

SERIAL 185-0001 THRU 18502090
SERIAL 18051184 THRU 18052284

Figure 10. Wing Spar Assemblies

FIGURE AND INDEX NO.	PART NUMBER	DESCRIPTION 1 2 3 4 5 6 7	UNITS PER ASSY	USABLE ON CODE
10 -	*	SPAR ASSEMBLIES-WING	NP	A
	*	SPAR ASSEMBLIES-WING EXTENDED RANGE	NP	B
	0721401-1	SPAR ASSEMBLY-WING FRONT LH	1	M
	0721401-19	SPAR ASSEMBLY-WING FRONT LH	1	P
	0721401-3	SPAR ASSEMBLY-WING FRONT LH EXTENDED RANGE WING	1	N
	0721401-17	SPAR ASSEMBLY-WING FRONT LH EXTENDED RANGE WING	1	P
	0721401-2	SPAR ASSEMBLY-WING FRONT RH	1	M
	0721401-20	SPAR ASSEMBLY-WING FRONT RH	1	P
	0721401-4	SPAR ASSEMBLY-WING FRONT RH EXTENDED RANGE WING	1	N
	0721401-18	SPAR ASSEMBLY-WING FRONT RH EXTENDED RANGE WING	1	P
- 1	0721400-3	ANGLE-FRONT SPAR CAP LH	1	
	0721400-4	ANGLE-FRONT SPAR CAP RH	1	
- 2	0523309	ANGLE-FRONT SPAR LH	1	
	0523309-1	ANGLE-FRONT SPAR RH	1	
- 3	0721400-34	SPACER-FRONT SPAR	1	A
	0721400-32	SPACER	1	B
- 4	1221024-1	SPACER-UPPER FUEL PANEL	1	
- 5	0721400-9	SPACER-FRONT SPAR WHEN EXHAUSTED USE 0721400-35	2	H
	0721400-35	SPACER-FRONT SPAR .125 THICK	1	J
- 6	0523308	PLATE-FRONT SPAR ROOT REINFORCEMENT	1	
- 7	0523315	PLATE-FRONT SPAR CAP LH	1	
	0523315-1	PLATE-FRONT SPAR CAP RH	1	
- 8	0721400-13	CHANNEL-FRONT SPAR SPLICE LH	1	
	0721400-14	CHANNEL-FRONT SPAR SPLICE RH	1	
- 9	0721400-17	PLATE-FRONT SPAR SPLICE CHANNEL LH	1	
	0721400-18	PLATE-FRONT SPAR SPLICE CHANNEL RH	1	
-10	0721402-3	ANGLE-FRONT SPAR SPLICE LH	1	
	0721402-4	ANGLE-FRONT SPAR SPLICE RH	1	
-10A	0721401-13	STIFFENER-LH	1	P
	0721401-14	STIFFENER-RH	1	P
-11	0721402-1	ANGLE-FRONT SPAR FORWARD CAP STRIP LH	1	
	0721402-2	ANGLE-FRONT SPAR FORWARD CAP STRIP RH	1	
-12	0523306	FITTING-FRONT SPAR STRUT	1	
		ATTACHING PARTS		
-13	AN5-7A	BOLT	3	
-14	AN960-516	WASHER	3	
-15	NAS679A5	NUT	3	
		---*---		
-16	0721401-7	CHANNEL-FRONT SPAR OUTBOARD LH	1	
	0721401-8	CHANNEL-FRONT SPAR OUTBOARD RH	1	
-17	0721401-5	CHANNEL-FRONT SPAR INBOARD LH	1	
	0721401-6	CHANNEL-FRONT SPAR INBOARD RH	1	
-18	0721400-33	SPACER	1	B
-19	0721400-31	COVER	1	
		ATTACHING PARTS		
	CR163-4-4	RIVET CY	13	
		---*---		
-20	0523400-61	SPAR ASSEMBLY-WING REAR LH WHEN EXHAUSTED USE 0523400-73	1	C
	0523400-73	SPAR ASSEMBLY-WING REAR LH USE 0523400-81	1	D
	0523400-81	SPAR ASSEMBLY-WING REAR LH WHEN EXHAUSTED USE 0523400-91	1	E
*	0523400-91	SPAR ASSEMBLY-WING REAR LH	1	L
	0523400-111	SPAR ASSEMBLY-WING REAR LH	1	P
	0523400-60	SPAR ASSEMBLY-WING REAR RH WHEN EXHAUSTED USE 0523400-72	1	C
	0523400-72	SPAR ASSEMBLY-WING REAR RH WHEN EXHAUSTED USE 0523400-80	1	D
	0523400-80	SPAR ASSEMBLY-WING REAR RH WHEN EXHAUSTED USE 0523400-90	1	E
	0523400-90	SPAR ASSEMBLY-WING REAR RH	1	L
	0523400-112	SPAR ASSEMBLY-WING REAR RH	1	P
-21	0422229-11	FITTING-WING SPAR REINFORCEMENT	2	
-21A	1620058-1	DOUBLER-REAR SPAR	1	P
-22	0523409-1	CHANNEL-REINFORCEMENT	2	
-23	0523409-2	CHANNEL-REINFORCEMENT	2	
-24	0523400-20	ANGLE-REAR SPAR REINFORCEMENT LH	1	
	0523400-21	ANGLE-REAR SPAR REINFORCEMENT RH	1	

CONTINUED ON NEXT PAGE

FIGURE AND INDEX NO.	PART NUMBER	DESCRIPTION 1 2 3 4 5 6 7	UNITS PER ASSY	USABLE ON CODE
10 -25	0523400-59	DOUBLER-LH WHEN EXHAUSTED USE 0523400-79 ----------	1	C
	0523400-79	DOUBLER-LH WHEN EXHAUSTED USE 0523400-87 ----------	1	D
	0523400-87	DOUBLER-LH WHEN EXHAUSTED USE 0523400-97 ----------	1	E
	0523400-97	DOUBLER-LH ----------	1	K
	0523400-58	DOUBLER-RH WHEN EXHAUSTED USE 0523400-78 ----------	1	C
	0523400-78	DOUBLER-RH WHEN EXHAUSTED USE 0523400-86 ----------	1	D
	0523400-86	DOUBLER-RH WHEN EXHAUSTED USE 0523400-96 ----------	1	E
	0523400-96	DOUBLER-RH ----------	1	K
-26	0523406	SEGMENT-REAR SPAR OUTBOARD LH STA 100.0 TO 154.0 ------ WHEN EXHAUSTED USE 0523406-3	1	F
	0523406-3	SEGMENT-REAR SPAR OUTBOARD LH STA 100.0 TO 154.0 ------	1	G
	0523406-1	SEGMENT-REAR SPAR OUTBOARD RH STA 100.0 TO 154.0 ------ WHEN EXHAUSTED USE 0523406-2	1	F
	0523406-2	SEGMENT-REAR SPAR OUTBOARD RH STA 100.0 TO 154.0 ------	1	G
	0523005-50	SPAR ASSEMBLY-OUTBOARD AUXILIARY LH ----------	1	
	0523005-51	SPAR ASSEMBLY-OUTBOARD AUXILIARY RH ----------	1	
-27	0523813-3	FILLER-TRAILING EDGE ----------	1	
-28	0523813-2	FILLER-TRAILING EDGE ----------	1	
-29	0523813-4	FILLER-TRAILING EDGE ----------	1	
-30	0523813-5	FILLER-TRAILING EDGE ----------	1	
-31	0523216	REINFORCEMENT ----------	2	
-32	0523215	REINFORCEMENT-WING LH ----------	1	
	0523215-1	REINFORCEMENT-WING RH ----------	1	

NOTE. *FOR 180 STANDARD WING SPAR ASSEMBLIES SERIALS 18051184 THRU 18051312 SEE FIGURE 9

A---SERIAL 185-0001 THRU 18502090 STD WING SPARS
SERIAL 18051313 THRU 18052284 STD WING SPARS
B---SERIAL 185-0001 THRU 18502090 EXTENDED RANGE WING SPARS ONLY
SERIAL 18051184 THRU 18052284 EXTENDED RANGE WING SPARS ONLY
C---SERIAL 185-0001 THRU 185-1300
SERIAL 18051184 THRU 18051875
D---SERIAL 185-1301 THRU 185-1401
SERIAL 18051876 THRU 18051954
E---SERIAL 185-1402 THRU 185-1576
SERIAL 18051955 THRU 18052090
F---SERIAL 185-0001 THRU 185-1335
SERIAL 18051184 THRU 18051910
G---SERIAL 185-1336 THRU 18502090
SERIAL 18051911 THRU 18052284
H---SERIAL 185-0001 THRU 185-1577
SERIAL 18051184 THRU 18052105
J---SERIAL 185-1578 THRU 18502090
SERIAL 18052106 THRU 18052284
K---SERIAL 185-1577 THRU 18502090
SERIAL 18052091 THRU 18052284
L---SERIAL 185-1577 THRU 18501930, 18501932 THRU 18501934
SERIAL 18052091 THRU 18052222
M---SERIAL 185-0001 THRU 18501930, 18501932 THRU 18501934 STD WING SPARS
SERIAL 18051313 THRU 18052222 STD WING SPARS
N---SERIAL 185-0001 THRU 18501930, 18501932 THRU 18501934 EXTENDED RANGE WING SPARS
SERIAL 18051184 THRU 18052222 EXTENDED RANGE WING SPARS
P---SERIAL 18501931, 18501935 THRU 18502090
SERIAL 18052223 THRU 18052284

Wing (Cont)

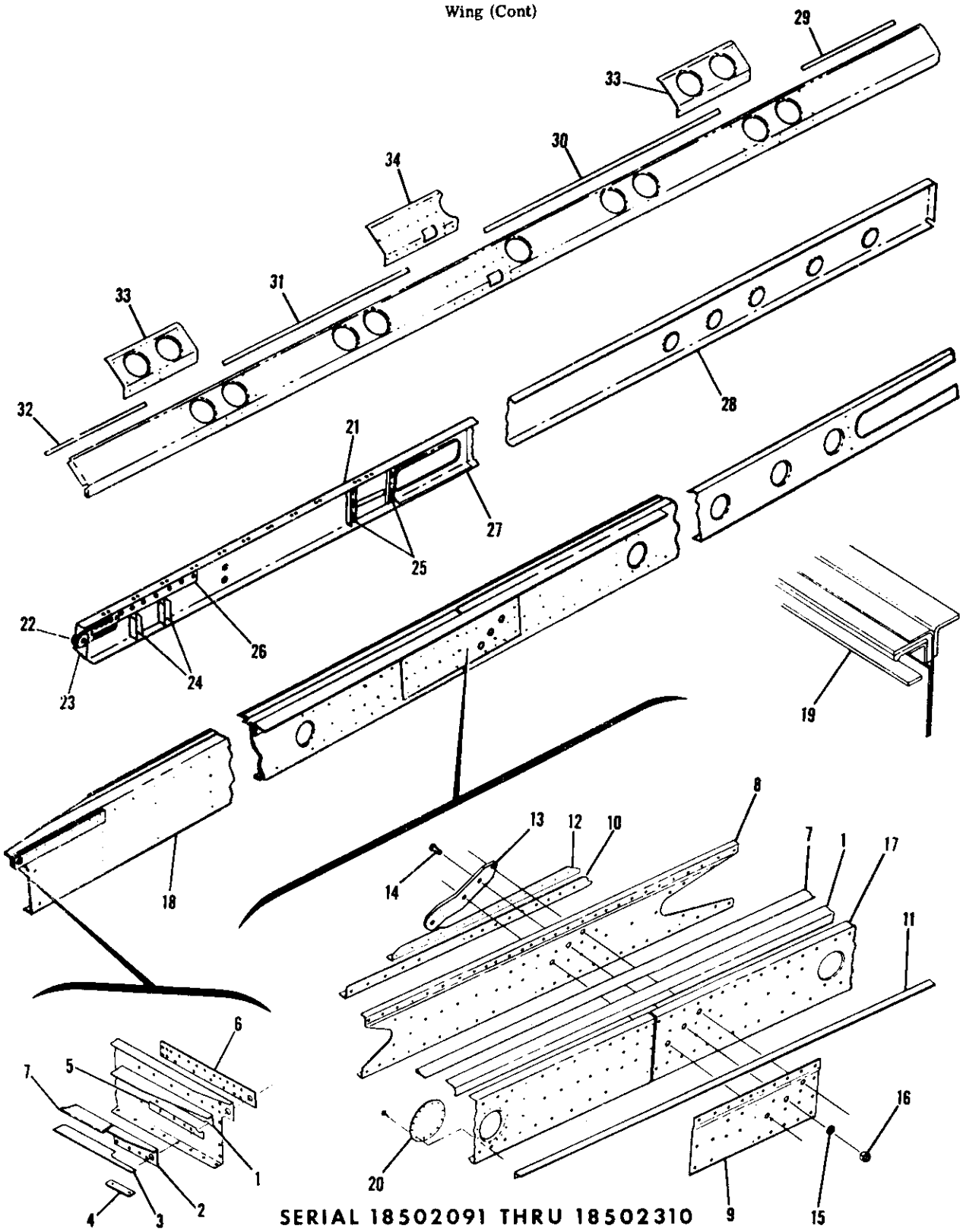

SERIAL 18502091 THRU 18502310
SERIAL 18052285 THRU 18052384

Figure 10A. Wing Spar Assemblies

FIGURE AND INDEX NO.	PART NUMBER	DESCRIPTION 1 2 3 4 5 6 7	UNITS PER ASSY	USABLE ON CODE
10A-		SPAR ASSEMBLIES-WING STANDARD & EXTENDED RANGE	NP	A
	0721401-11	SPAR ASSEMBLY-WING FRONT LH	1	
	0721401-12	SPAR ASSEMBLY-WING FRONT RH	1	
- 1	0721400-3	ANGLE-FRONT SPAR CAP LH	1	
	0721400-4	ANGLE-FRONT SPAR CAP RH	1	
- 2	0523309	ANGLE-FRONT SPAR LH	1	
	0523309-1	ANGLE-FRONT SPAR RH	1	
- 3	0721400-32	SPACER	1	
- 4	1221024-1	SPACER-UPPER FUEL PANEL	1	
- 5	0721400-35	SPACER-FRONT SPAR .125 THICK	1	
- 6	0523308	PLATE-FRONT SPAR ROOT REINFORCEMENT	1	
- 7	0523315	PLATE-FRONT SPAR CAP LH	1	
	0523315-1	PLATE-FRONT SPAR CAP RH	1	
- 8	0721400-13	CHANNEL-FRONT SPAR SPLICE LH	1	
	0721400-14	CHANNEL-FRONT SPAR SPLICE RH	1	
- 9	0721400-17	PLATE-FRONT SPAR SPLICE CHANNEL LH	1	
	0721400-18	PLATE-FRONT SPAR SPLICE CHANNEL RH	1	
-10	0721402-3	ANGLE-FRONT SPAR SPLICE LH	1	
	0721402-4	ANGLE-FRONT SPAR SPLICE RH	1	
-11	0721402-1	ANGLE-FRONT SPAR FORWARD CAP STRIP LH	1	
	0721402-2	ANGLE-FRONT SPAR FORWARD CAP STRIP RH	1	
-12	0721401-13	ANGLE-STIFFENER LH	1	
	0721401-14	ANGLE-STIFFENER RH	1	
-13	0523306	FITTING-FRONT SPAR STRUT	1	
		ATTACHING PARTS		
-14	AN5-7A	BOLT	3	
-15	AN960-516	WASHER	3	
-16	NAS679A5	NUT	3	
		---*---		
-17	0721401-15	CHANNEL-FRONT SPAR OUTBOARD LH	1	
	0721401-16	CHANNEL-FRONT SPAR OUTBOARD RH	1	
-18	0721401-5	CHANNEL-FRONT SPAR INBOARD LH	1	
	0721401-6	CHANNEL-FRONT SPAR INBOARD RH	1	
-19	0721400-33	SPACER	1	
-20	0721400-31	COVER	1	
		ATTACHING PARTS		
	CR163-4-4	RIVET	13	
		---*---		
-21	0523400-111	SPAR ASSEMBLY-WING REAR LH	1	
	0523400-112	SPAR ASSEMBLY-WING REAR RH	1	
-22	0422229-11	FITTING-WING SPAR REINFORCEMENT	2	
-23	1620058-1	DOUBLER	1	
-24	0523409-1	CHANNEL-REINFORCEMENT	2	
-25	0523409-2	CHANNEL-REINFORCEMENT	2	
-26	0523400-20	ANGLE-REAR SPAR REINFORCEMENT LH	1	
	0523400-21	ANGLE-REAR SPAR REINFORCEMENT RH	1	
-27	0523400-97	DOUBLER-LH	1	
	0523400-96	DOUBLER-RH	1	
-28	0523406-3	SEGMENT-REAR SPAR OUTBOARD LH STA 100.0 TO 154.0	1	
	0523406-2	SEGMENT-REAR SPAR OUTBOARD RH STA 100.0 TO 154.0	1	
	0523005-50	SPAR ASSEMBLY-OUTBOARD AUXILIARY LH	1	
	0523005-51	SPAR ASSEMBLY-OUTBOARD AUXILIARY RH	1	
-29	0523813-3	FILLER-TRAILING EDGE	1	
-30	0523813-2	FILLER-TRAILING EDGE	1	
-31	0523813-4	FILLER-TRAILING EDGE	1	
-32	0523813-5	FILLER-TRAILING EDGE	1	
-33	0523216	REINFORCEMENT	2	
-34	0523215	REINFORCEMENT-WING LH	1	
	0523215-1	REINFORCEMENT-WING RH	1	
		A---SERIAL 18502091 THRU 18502310		
		SERIAL 18052285 THRU 18052384		

Wing (Cont)

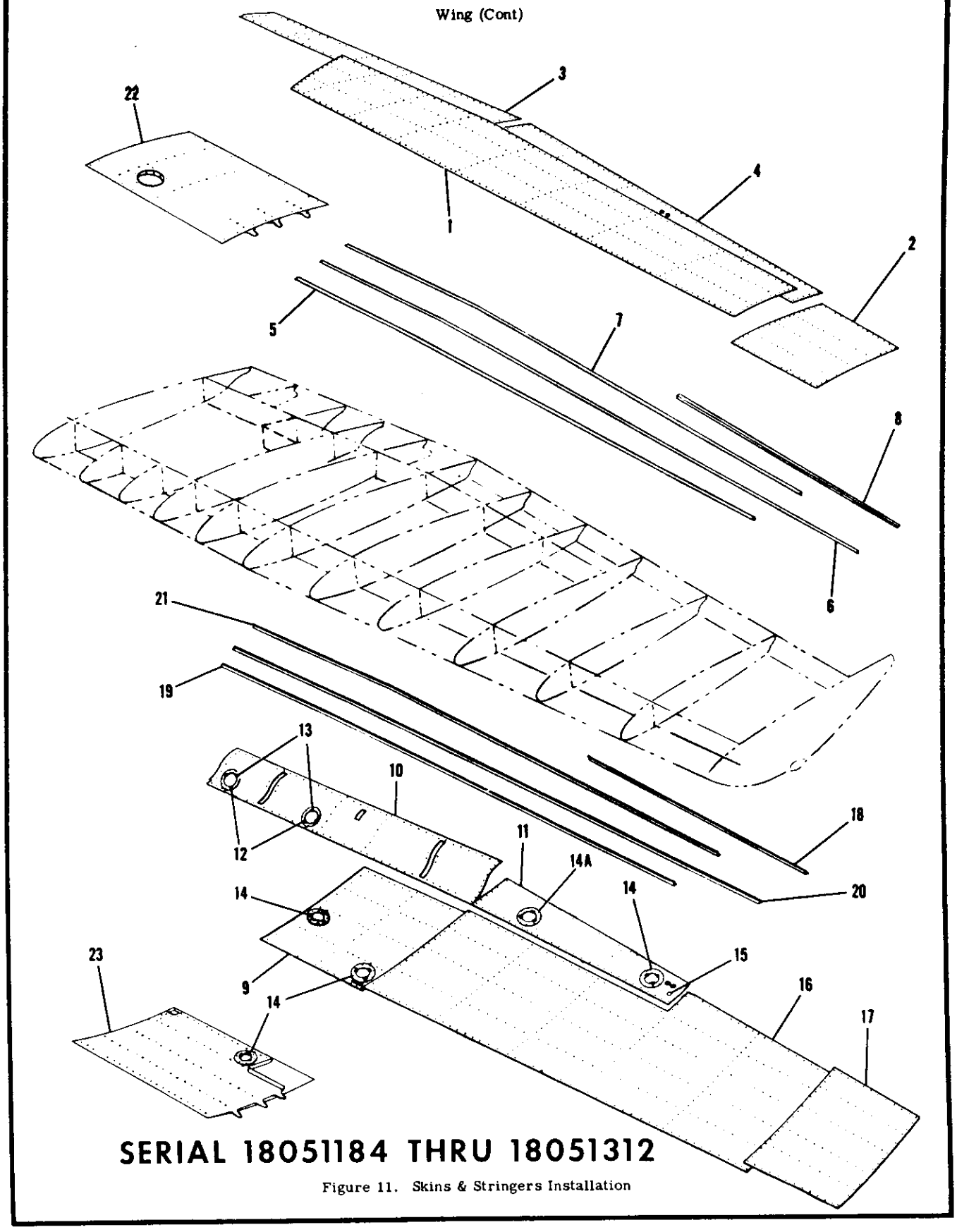

SERIAL 18051184 THRU 18051312

Figure 11. Skins & Stringers Installation

FIGURE AND INDEX NO.	PART NUMBER	DESCRIPTION 1 2 3 4 5 6 7	UNITS PER ASSY	USABLE ON CODE
11 -		SKINS & STRINGERS INSTALLATION LH	NP	A
		SKINS & STRINGERS INSTALLATION RH	NP	A
- 1	0720001-45	SKIN-UPPER STA 71.375 TO 190.0	1	
- 2	0720601-17	SKIN-UPPER STA 190.0 TO 208.0	1	
- 3	0720001-69	SKIN-UPPER STA 22.875 TO 100.5	1	
- 4	0720601-20	SKIN-UPPER STA 100.5 TO 190.0	1	
- 5	0523541-43	STRINGER-WING UPPER LH	1	
	0523541-44	STRINGER-WING UPPER RH	1	
- 6	0523541-47	STRINGER-WING UPPER LH	1	
	0523541-46	STRINGER-WING UPPER RH	1	
- 7	0523541-45	STRINGER-WING UPPER LH	1	
	0523541-48	STRINGER-WING UPPER RH	1	
- 8	0523003-40	STRINGER-UPPER	1	
- 9	0720001-66	SKIN-WING LOWER LH STA 71.375 TO 100.0	1	
	0720001-44	SKIN-WING LOWER RH STA 71.375 TO 100.0	1	
-10	0720001-67	SKIN-WING LOWER LH STA 22.875 TO 100.5	1	
	0720001-68	SKIN-WING LOWER RH STA 22.875 TO 100.5	1	
-11	0720601-24	SKIN-LOWER STA 100.5 TO 154.0 WHEN EXHAUSTED	1	
		USE 1220002-80		
	1220003-80 *	SKIN-LOWER STA 100.5 TO 154.0	1	
-12	S237	DOUBLER-INSPECTION OPENING	2	
-13	NAS395-14-3	NUT TIN A1274-8Z-3	6	
-14	S226-2	DOUBLER ASSEMBLY	4	
	NAS444-14	NUT TIN A6162-8Z-3	3	
-14A	S226-2	DOUBLER ASSEMBLY 4.00 IN ID	1	
	1222021-1 #	DOUBLER ASSEMBLY 4.70 IN ID	1	
-15	48155	PLUG BUTTON UC	1	
-16	0720001-10	SKIN-LOWER STA 100.0 TO 190.0	1	
-17	0720601-18	SKIN-LOWER STA 190.0 TO 208.0	1	
-18	0523003-40	STRINGER-LOWER	1	
-19	0523541-50	STRINGER-WING LOWER LH	1	
	0523541-49	STRINGER-WING LOWER RH	1	
-20	0523541-48	STRINGER-WING LOWER LH	1	
	0523541-45	STRINGER-WING LOWER RH	1	
-21	0523541-46	STRINGER-WING LOWER LH	1	
	0523541-47	STRINGER-WING LOWER RH	1	
-22	0721201-51	PANEL ASSEMBLY-WING FUEL BAY UPPER LH	1	
	0721201-67	PANEL ASSEMBLY-WING FUEL BAY UPPER RH	1	
-23	0721201-1	PANEL ASSEMBLY-WING FUEL BAY LOWER COVER LH	1	
	0721201-2	PANEL ASSEMBLY-WING FUEL BAY LOWER COVER RH	1	

NOTE. *WHEN INITIALLY ORDERING THIS PART ALSO ORDER PART MARKED #, ONE 1222022-1 COVER & SIX S102228-6 SCREWS.

A---SERIAL 18051184 THRU 19051312 STANDARD WING SKINS & STRINGERS ONLY

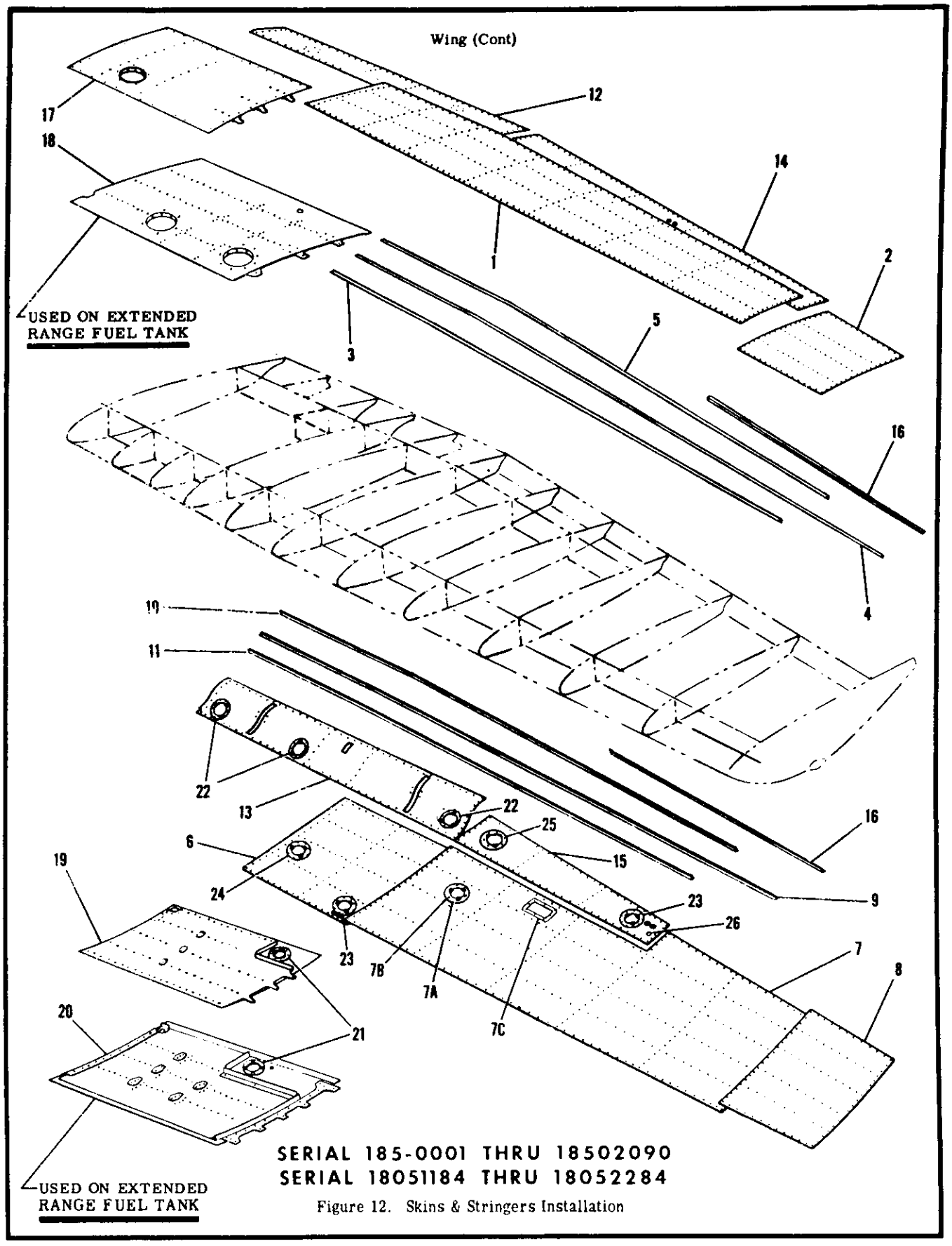

SERIAL 185-0001 THRU 18502090
SERIAL 18051184 THRU 18052284

Figure 12. Skins & Stringers Installation

FIGURE AND INDEX NO.	PART NUMBER		DESCRIPTION 1 2 3 4 5 6 7	UNITS PER ASSY	USABLE ON CODE
12 -		**	SKINS & STRINGERS INSTALLATION-WING LH	NP	A
			SKINS & STRINGERS INSTALLATION-WING LH EXTENDED RANGE	NP	B
		**	SKINS & STRINGERS INSTALLATION-WING RH	NP	A
			SKINS & STRINGERS INSTALLATION-WING RH EXTENDED RANGE	NP	B
- 1	1220002-46		SKIN-UPPER STA 71.977 TO 190.0	1	A
	1220003-15		SKIN-UPPER LH STA 85.625 TO 190.0	1	B
	1220004-15		SKIN-UPPER RH STA 85.625 TO 190.0	1	B
- 2	1220002-21		SKIN-UPPER STA 190.0 TO 208.0	1	
- 3	0523541-43		STRINGER-WING UPPER LH	1	A
	0523541-51		STRINGER-WING UPPER LH	1	B
	0523541-44		STRINGER-WING UPPER RH	1	A
	0523541-52		STRINGER-WING UPPER RH	1	B
- 4	0523541-45		STRINGER-WING UPPER LH	1	A
	0523541-53		STRINGER-WING UPPER LH	1	B
	0523541-46		STRINGER-WING UPPER RH	1	A
	0523541-54		STRINGER-WING UPPER RH	1	B
- 5	0523541-47		STRINGER-WING UPPER LH	1	A
	0523541-59		STRINGER-WING UPPER LH	1	B
	0523541-48		STRINGER-WING UPPER RH	1	A
	0523541-56		STRINGER-WING UPPER RH	1	B
- 6	1220002-49		SKIN-LOWER INBOARD LH	1	A
	1220002-48		SKIN-LOWER INBOARD RH	1	A
- 7	1220002-85		SKIN-LOWER STA 100.0 TO 190.0	1	A
- 7A	S226-5F		DOUBLER ASSEMBLY	1	A
	1220003-16		SKIN-LOWER LH STA 85.625 TO 190.0 WEU 1220003-30	1	E
	1220003-30		SKIN ASSEMBLY-LOWER LH STA 85.625 TO 190.0	1	F
	1220004-27		SKIN ASSEMBLY-LOWER RH STA 85.625 TO 190.0	1	B
- 7B	S226-5F		DOUBLER ASSEMBLY	1	B
- 7C	1220095-3		DOUBLER ASSEMBLY	1	G
- 8	1220002-22		SKIN-LOWER STA 190.0 TO 208.0	1	
- 9	0523541-46		STRINGER-WING LOWER LH	1	A
	0523541-54		STRINGER-WING LOWER LH	1	B
	0523541-45		STRINGER-WING LOWER RH	1	A
	0523541-53		STRINGER-WING LOWER RH	1	B
-10	0523541-48		STRINGER-WING LOWER LH	1	A
	0523541-60		STRINGER-WING LOWER LH	1	B
	0523541-47		STRINGER-WING LOWER RH	1	A
	0523541-55		STRINGER-WING LOWER RH	1	B
-11	0523541-50		STRINGER-WING LOWER LH	1	A
	0523541-58		STRINGER-WING LOWER LH	1	B
	0523541-49		STRINGER-WING LOWER RH	1	A
	0523541-57		STRINGER-WING LOWER RH	1	B
-12	1220002-27		SKIN-UPPER TRAILING EDGE STA 23.625 TO 100.5	1	
-13	0720001-67		SKIN-LOWER TRAILING EDGE LH STA 23.625 TO 100.5	1	
	0720001-68		SKIN-LOWER TRAILING EDGE RH STA 23.625 TO 100.5	1	
-14	1220002-25		SKIN-UPPER TRAILING EDGE STA 100.5 TO 190.0	1	
-15	1220002-26		SKIN-LOWER TRAILING EDGE STA 100.5 TO 190.0 WHEN	1	C
			EXHAUSTED USE 1220002-80		
	1220002-80	*	SKIN-LOWER TRAILING EDGE STA 100.5 TO 190.0	1	D
-16	0523003-40		STRINGER-WING	2	
-17	0722014-1		PANEL ASSEMBLY-WING FUEL WELL UPPER LH	1	A
	0722014-2		PANEL ASSEMBLY-WING FUEL WELL UPPER RH	1	A
-18	1220006-21		PANEL ASSEMBLY-WING FUEL WELL UPPER LH	1	B
	1220006-22		PANEL ASSEMBLY-WING FUEL WELL UPPER RH	1	B
-19	0722015-33		PANEL ASSEMBLY-WING FUEL WELL LOWER LH	1	A
	0722015-32		PANEL ASSEMBLY-WING FUEL WELL LOWER RH	1	A
-20	1220007-37		PANEL ASSEMBLY-WING FUEL WELL LOWER LH	1	B
	1220007-20		PANEL ASSEMBLY-WING FUEL WELL LOWER RH	1	B
-21	S1443-3		DOUBLER-INSPECTION OPENING	1	

CONTINUED ON NEXT PAGE

FIGURE AND INDEX NO.	PART NUMBER	DESCRIPTION 1 2 3 4 5 6 7	UNITS PER ASSY	USABLE ON CODE
12 -22	S1048-2	DOUBLER ASSEMBLY ----------	3	
-23	S226-5F	DOUBLER ASSEMBLY ----------	2	
-24	S226-5F	DOUBLER ASSEMBLY ----------	1	A
-25	S226-5F	DOUBLER ASSEMBLY ----------	1	C
	1222021-1 %	DOUBLER ASSEMBLY ----------	1	D
	NAS444-14	NUT ----------	6	
-26	CM2692-28-1S	PLUG BUTTON ----------	1	

NOTE. *WHEN INITIALLY ORDERING THIS PART FOR AIRCRAFT PRIOR TO SERIALS 185-1301 & 18051876 ALSO ORDER PART MARKED %, ONE 1222022-1 COVER & SIX S102228-6 SCREWS.

NOTE. **FOR 180 STD RANGE SKINS & STRINGERS SERIAL 18051184 THRU 18051312 SEE FIG 11.

A---SERIAL 185-0001 THRU 18502090 STANDARD WING SKINS & STRINGERS
SERIAL 18051313 THRU 18052284 STANDARD WING SKINS & STRINGES
B---SERIAL 185-0001 THRU 18502090 EXTENDED RANGE WING SKINS & STRINGERS
SERIAL 18051184 THRU 18052284 EXTENDED RANGE WING SKINS & STRINGERS
C---SERIAL 185-0001 THRU 185-1300
SERIAL 18051313 THRU 18051875
D---SERIAL 185-1301 THRU 18502090
SERIAL 18051876 THRU 18052284
E---SERIAL 185-0001 THRU 185-1300 EXTENDED RANGE WING
SERIAL 18051184 THRU 18051875 EXTENDED RANGE WING
F---SERIAL 185-1301 THRU 18502090 EXTENDED RANGE WING
SERIAL 18051876 THRU 18052284 EXTENDED RANGE WING
G---SERIAL 18501887 THRU 18502090
SERIAL 18052206 THRU 18052284

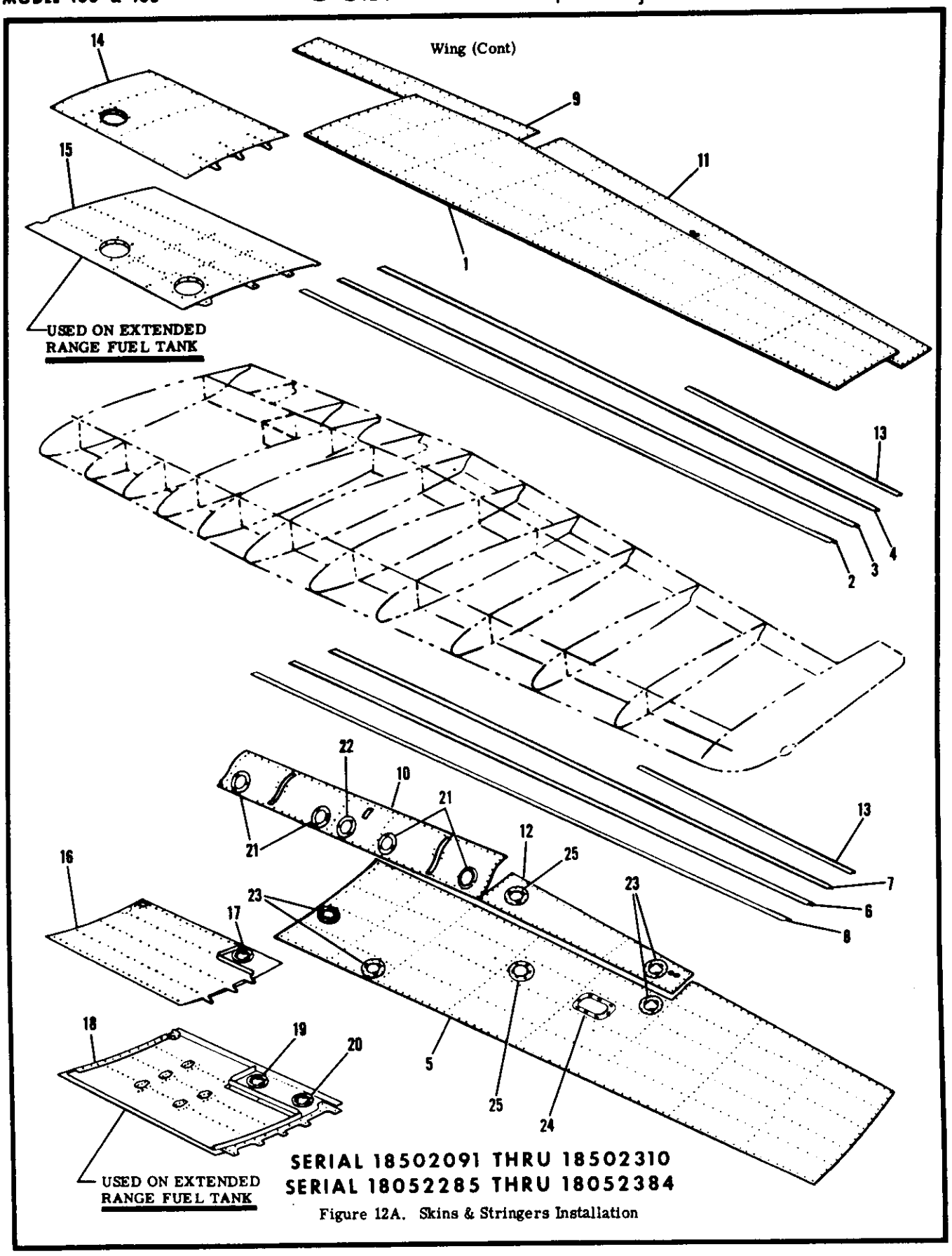

Figure 12A. Skins & Stringers Installation

FIGURE AND INDEX NO.	PART NUMBER		DESCRIPTION 1 2 3 4 5 6 7	UNITS PER ASSY	USABLE ON CODE
12A-			SKINS & STRINGERS INSTALLATION-WING LH	NP	A
			SKINS & STRINGERS INSTALLATION-WING RH	NP	A
- 1	0722182-13		SKIN-UPPER STA 71.98 TO STA 208.00	1	
	0722182-16	*	SKIN-UPPER STA 85.625 TO STA 208.00	1	
- 2	0523541-43		STRINGER-WING UPPER LH	1	
	0523541-51	*	STRINGER-WING UPPER LH	1	
	0523541-44		STRINGER-WING UPPER RH	1	
	0523541-52	*	STRINGER-WING UPPER RH	1	
- 3	0523541-45		STRINGER-WING UPPER LH	1	
	0523541-53	*	STRINGER-WING UPPER LH	1	
	0523541-46		STRINGER-WING UPPER RH	1	
	0523541-54	*	STRINGER-WING UPPER RH	1	
- 4	0523541-47		STRINGER-WING UPPER LH	1	
	0523541-59	*	STRINGER-WING UPPER LH	1	
	0720612-2		STRINGER-WING UPPER RH	1	
	0523541-56	*	STRINGER-WING UPPER RH	1	
- 5	0722182-15		SKIN-LOWER LH STA 71.98 TO STA 208.00	1	
	0722182-14		SKIN-LOWER RH STA 71.98 TO STA 208.00	1	
	0722182-17	*	SKIN-LOWER LH & RH STA 85.625 TO STA 208.00	1	
- 6	0523541-46		STRINGER-WING LOWER LH	1	
	0523541-54	*	STRINGER-WING LOWER LH	1	
	0523541-45		STRINGER-WING LOWER RH	1	
	0523541-53	*	STRINGER-WING LOWER RH	1	
- 7	0523541-48		STRINGER-WING LOWER LH	1	
	0523541-60	*	STRINGER-WING LOWER LH	1	
	0720612-1		STRINGER-WING LOWER RH	1	
	0523541-55	*	STRINGER-WING LOWER RH	1	
- 8	0523541-50		STRINGER-WING LOWER LH	1	
	0523541-58	*	STRINGER-WING LOWER LH	1	
	0523541-49		STRINGER-WING LOWER RH	1	
	0523541-57	*	STRINGER-WING LOWER RH	1	
- 9	0720601-21		SKIN-UPPER TRAILING EDGE STA 23.625 TO STA 100.50	1	
-10	0720601-99		SKIN-LOWER TRAILING EDGE LH STA 23.625 TO STA 100.50	1	
	0720601-98		SKIN-LOWER TRAILING EDGE RH STA 23.625 TO STA 100.50	1	
-11	0722182-19		SKIN-UPPER OUTBD TRAILING EDGE STA 100.50 TO STA 208.00 -	1	
-12	1220002-92		SKIN-LOWER OUTBD TRAILING EDGE STA 100.50 TO STA 154.00 -	1	
			WEU 0722182-25		
	0722182-25		SKIN-LOWER OUTBD TRAILING EDGE STA 100.50 TO STA 154.00 -	1	
-13	0523003-40		STRINGER-WING	2	
-14	0722014-1		PANEL ASSEMBLY-WING FUEL WELL UPPER LH	1	
	0722014-21		PANEL ASSEMBLY-WING FUEL WELL UPPER RH	1	
-15	1220006-21	*	PANEL ASSEMBLY-WING FUEL WELL UPPER LH	1	
	1220006-22	*	PANEL ASSEMBLY-WING FUEL WELL UPPER RH	1	
-16	0722015-61		PANEL ASSEMBLY-WING FUEL WELL LOWER LH	1	
	0722015-60		PANEL ASSEMBLY-WING FUEL WELL LOWER RH	1	
-17	1222013-3		DOUBLER ASSEMBLY-ACCESS HOLE LH	1	
	1222013-6		DOUBLER ASSEMBLY-ACCESS HOLE RH	1	
	S1860-2A		NUTPLATE	6	
-18	1220007-63	*	PANEL ASSEMBLY-WING FUEL WELL LOWER LH	1	
	1220007-62	*	PANEL ASSEMBLY-WING FUEL WELL LOWER RH	1	
-19	1222013-3		DOUBLER ASSEMBLY-ACCESS HOLE LH	1	
	1222013-6		DOUBLER ASSEMBLY-ACCESS HOLE RH	1	
	S1860-2A		NUTPLATE	6	
-20	1220007-30		DOUBLER ASSEMBLY-ACCESS HOLE	1	
	S1860-2A		NUTPLATE	6	
-21	S237-2		DOUBLER ASSEMBLY-ACCESS HOLE	4	
-22	S237-2		DOUBLER ASSEMBLY-ACCESS HOLE RH ONLY	1	
	NAS395-14-3		NUT	3	
-23	S226-2		DOUBLER ASSEMBLY-ACCESS HOLE	4	
	S1860-2A		NUTPLATE	3	
-2-	1220095-3		DOUBLER ASSEMBLY LH ONLY	1	
	S1860-2		NUTPLATE	8	
-25	1222021-1		DOUBLER ASSEMBLY	2	
	S1860-2A		NUTPLATE	6	

NOTE. *DENOTES PARTS USED ON WING WITH EXTENDED RANGE FUEL TANK.

A---SERIAL 18502091 THRU 18502310
SERIAL 18052285 THRU 18052384

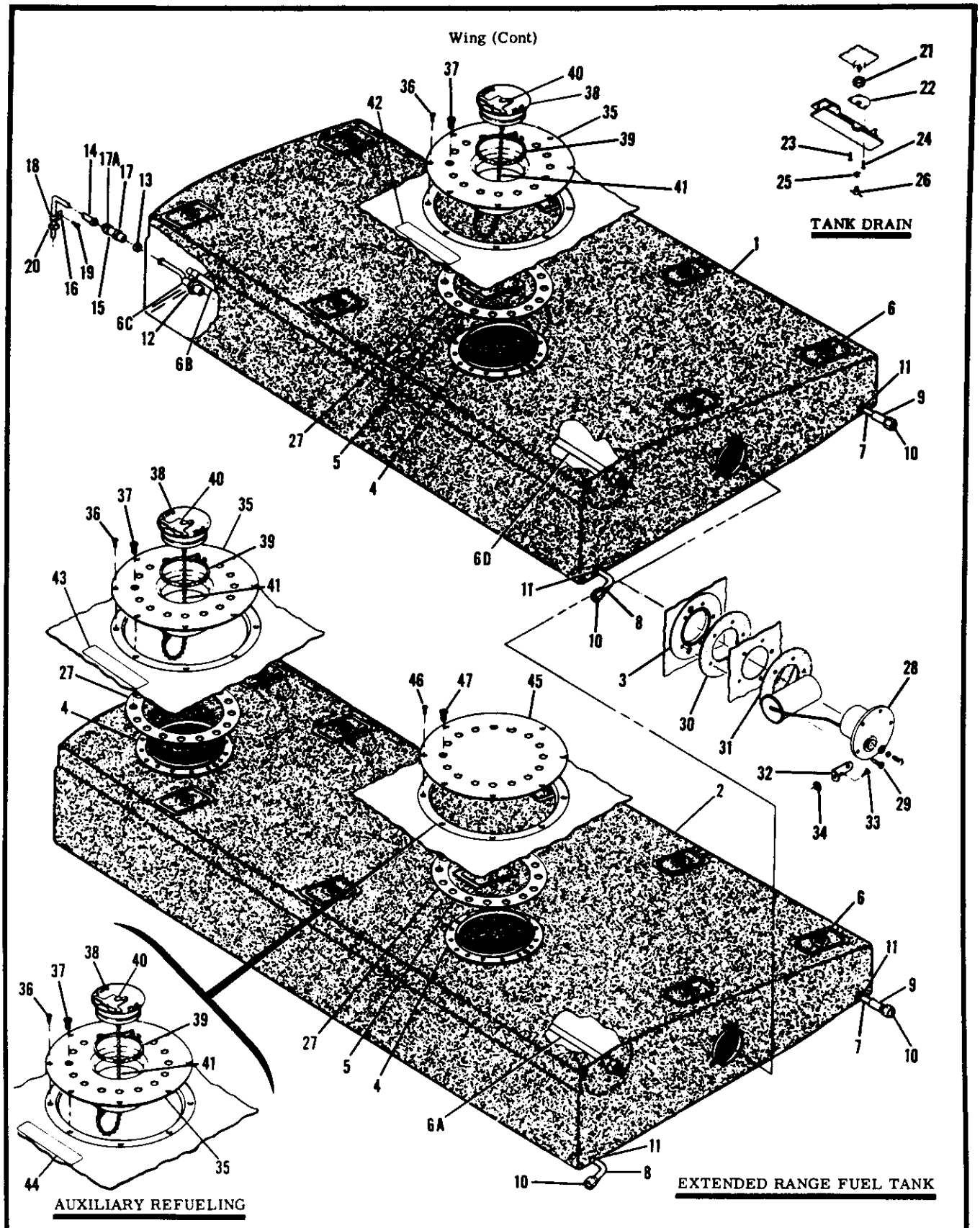

Figure 13. Fuel Tank Installation

FIGURE AND INDEX NO.	PART NUMBER		DESCRIPTION 1 2 3 4 5 6 7	UNITS PER ASSY	USABLE ON CODE
13 -			TANK INSTALLATION-FUEL RH	NP	
		*	TANK INSTALLATION-FUEL RH EXTENDED RANGE	NP	
			TANK INSTALLATION-FUEL LH	NP	
		*	TANK INSTALLATION-FUEL LH EXTENDED RANGE	NP	
- 1	0726001-16		TANK ASSEMBLY-FUEL RH	1	
	0726001-15		TANK ASSEMBLY-FUEL LH	1	
- 2	1200065-4	*	TANK ASSEMBLY-FUEL RH EXTENDED RANGE	1	
	1200065-3	*	TANK ASSEMBLY-FUEL LH EXTENDED RANGE	1	
- 3	0726001-3		RING ASSEMBLY-FUELGAGE ADAPTER	1	
- 4	FCC20068		FITTING USED ON U.S. RUBBER FUEL CELLS ONLY	1	
	FCC20068	*	FITTING USED ON U.S. RUBBER FUEL CELLS ONLY	2	
			ATTACHING PARTS		
- 5	AN509-10R4		SCREW	2	
			---*---		
- 6	295055		HANGER UC	8	
	295055	*	HANGER UC EXTENDED RANGE	10	
- 6A	0716614-1	*	TUBE-VENT INSIDE TANK EXTENDED RANGE WEU 0716614-3	1	E
	0716614-3	*	TUBE-VENT INSIDE TANK EXTENDED RANGE WEU 0716614-5	1	F
	0716614-5	*	TUBE-VENT INSIDE TANK EXTENDED RANGE	1	H
- 6B	1600010-12		TUBE-VENT INSIDE TANK STANDARD RANGE FLOATPLANE	1	G
			ATTACHING PARTS		
- 6C	AN742D8		CLAMP	1	G
	AN742D6		CLAMP	1	G
	AN3-3A		BOLT	1	G
	S1450-3-10-[illegible]		WASHER	1	G
	MS21044N3		NUT	1	G
			---*---		
- 6D	0700147-59		TUBE-VENT INSIDE TANK STANDARD RANGE FLOATPLANE	1	G
			ATTACHING PARTS		
	S1495-8		HOSE-2.00 IN LG BKI REF S1495-8-2.00	1	G
	NAS397-10		CLAMP	2	G
			---*---		
- 7	0720007-1		STRAINER ASSEMBLY-FUEL TANK AFT WEU 0720007-7	1	L
	0720007-7		STRAINER ASSEMBLY-FUEL TANK AFT	1	M
- 8	0720007-2		STRAINER ASSEMBLY-FUEL TANK FORWARD WEU 0720007-8	1	L
	0720007-8		STRAINER ASSEMBLY-FUEL TANK FORWARD	1	M
- 9	S292-12		SLEEVING-1.50 IN LG BKI	1	
-10	AN818-6D		NUT	1	
-11	S1891-10		CLAMP	4	
-12	0716125-2	#	VALVE ASSEMBLY-VENT	1	
	0721118-1	**	PLUG	1	
			ATTACHING PARTS		
-13	NAS397-14		CLAMP	1	
			---*---		
-14	0716127-2	#	LINE ASSEMBLY-VENT RH	1	
	0716127-1		LINE ASSEMBLY-VENT LH	1	
	1200106-52	*	LINE ASSEMBLY-VENT RH EXTENDED RANGE	1	
	1200106-51	*	LINE ASSEMBLY-VENT LH EXTENDED RANGE	1	
			ATTACHING PARTS		
-15	S1495-8		HOSE-2.0 IN LG BULK ITEM REF S1495-8-2.0	1	
-16	0512006-1	#	ANGLE	1	
-17	NAS397-14	#	CLAMP	1	
-17A	AN737RM30	#	CLAMP	2	
-18	S1486DG8U	#	CLAMP	1	
	S1486DG8U	*	CLAMP	2	
-19	S1021Z8-8	#	SCREW	1	
	S1021Z8-8	*	SCREW	1	
-20	MS35489-14	#	GROMMET		
			---*---		
-21	S1891-10		CLAMP	1	
-22	0322526-6		ADAPTER ASSEMBLY-FUEL TANK DRAIN	1	C
	0322526-7		ADAPTER ASSEMBLY-FUEL TANK DRAIN	1	D
			ATTACHING PARTS		
-23	AN515-832R7		SCREW	1	
-24	AN500A8-7		SCREW	1	
			---*---		
-25	MS28778B3		GASKET-DRAIN PLUG	1	
-26	0320105		PLUG-FUEL DRAIN	1	
	SEE FIG 13A		VALVE-FUEL DRAIN USED WITH FUEL SAMPLER CUP	1	
-27	0726002-1		GASKET	2	
	0726002-1	*	GASKET		

CONTINUED ON NEXT PAGE

FIGURE AND INDEX NO.	PART NUMBER	DESCRIPTION 1 2 3 4 5 6 7	UNITS PER ASSY	USABLE ON CODE
13 -28	0726110-1	TRANSMITTER & FLOAT-FUEL	1	
		ATTACHING PARTS		
-29	AN520-10R10	SCREW	5	
		---*---		
-30	0726001-7	GASKET-FUEL TRANSMITTER	1	
-31	S1588-1	GASKET-FUEL TRANSMITTER	1	
-32	0413247	GROUND STRAP	1	
		ATTACHING PARTS		
-33	AN515-8R8	SCREW	1	
-34	NAS679A08	NUT	1	
		---*---		
-35	0721306-1 %	ADAPTER ASSEMBLY-FUEL	1	
		ATTACHING PARTS		
-36	AN509-10R6	SCREW	8	
-37	AN507-428R7	SCREW	16	
		---*---		
-38	C156001-0102 %	CAP ASSEMBLY-FUEL WEU C156001-0106	1	J
	C156001-0106 %	CAP ASSEMBLY-FUEL	1	K
-39	4196	O RING WISO	1	
-40	4189	HANDLE WISO	1	
	4199	PIN-HANDLE WISO	1	
	4197	O RING WISO	1	
-41	C156001-0104 %	CHAIN ASSEMBLY	1	
-42	0705023-1	PLACARD-FUEL FILL 180 STD RANGE	1	A
	0705023-4	PLACARD-FUEL FILL 185 STD RANGE	1	B
-43	0705023-2	PLACARD-FUEL FILL 180 EXT RANGE	1	A
	0705023-6	PLACARD-FUEL FILL 185 EXT RANGE	1	B
-44	0705023-7	PLACARD-FUEL FILL 180 EXT RANGE FLOATPLANE	1	A
	0705023-5	PLACARD-FUEL FILL 185 EXT RANGE AUXILIARY REFUELING	1	B
-45	1220022-3 *	PLATE-COVER	1	
		ATTACHING PARTS		
-46	AN509-10R6	SCREW	8	
-47	AN507-428R7	SCREW	16	
		---*---		

NOTE. *DENOTES PARTS USED WITH EXTENDED RANGE FUEL TANK

NOTE. #THESE PARTS ARE NOT USED WITH 0726001-16 RH STANDARD FUEL TANK FOR THE MODEL 180 SERIAL 18051184 THRU 18051312.

NOTE. **THESE PARTS USED WITH 0726001-16 STANDARD FUEL TANK FOR THE MODEL 180 SERIAL 18051184 THRU 18051312.

NOTE. %WHEN INITIALLY ORDERING THIS PART FOR AIRCRAFT PRIOR TO SERIALS 18052205 & 18501897 ALSO ORDER OTHER PARTS MARKED WITH % & APPROPIATE FUEL FILL PLACARD

A---SERIAL 18051184 THRU 18052384
B---SERIAL 185-0001 THRU 18502310
C---SERIAL 18051184 THRU 18051826
SERIAL 185-0001 THRU 185-1203
D---SERIAL 18051827 THRU 18052384
SERIAL 185-1204 THRU 18502310
E---SERIAL 18051184 THRU 18051993
SERIAL 185-0001 THRU 185-1447
F---SERIAL 18051994 THRU 18052205
SERIAL 185-1448 THRU 18501895
G---SERIAL 18501808 THRU 18501812,
18501814, 18501820 THRU 18502310
H---SERIAL 18052206 THRU 18052384
SERIAL 18501896 THRU 18502310
J---SERIAL 185-0001 THRU 18502010
SERIAL 18051184 THRU 18052249
K---SERIAL 18502011 THRU 18502310
SERIAL 18052250 THRU 18052384
L---SERIAL 185-0001 THRU 18502107
SERIAL 18051184 THRU 18052271
M---SERIAL 18502108 THRU 18502310
SERIAL 18052272 THRU 18052384

Wing (Cont)

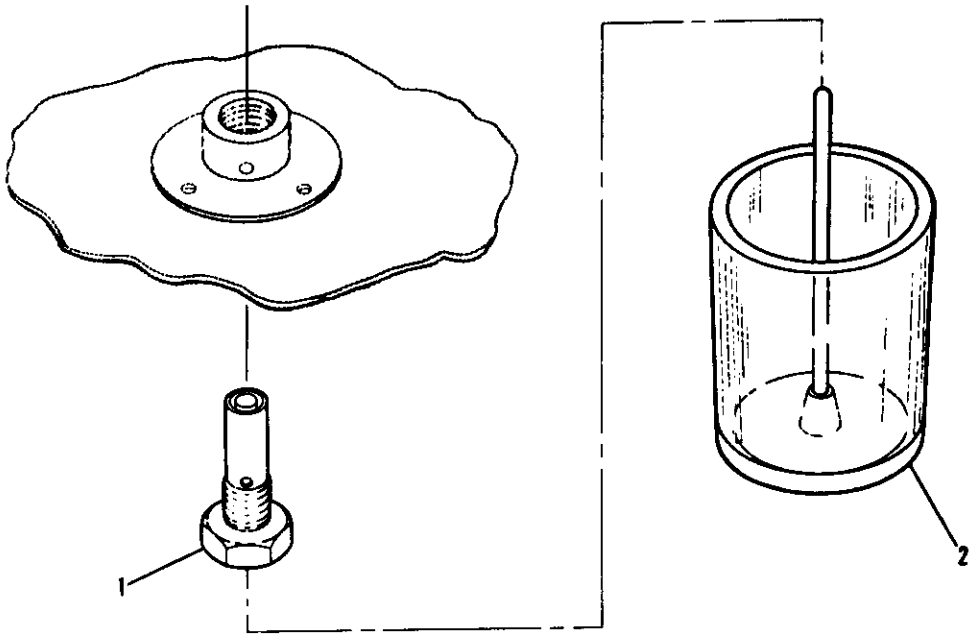

Figure 13A. Fuel Tank Drain Valve Installation

FIGURE AND INDEX NO.	PART NUMBER	DESCRIPTION 1 2 3 4 5 6 7	UNITS PER ASSY	USABLE ON CODE
13A-		FUEL TANK DRAIN VALVE INSTALLATION	NP	
- 1	S2106-1 *	DRAIN VALVE	2	
- 2	S2107-1 *	CUP-FUEL SAMPLER	1	
		NOTE. *THESE PARTS & INSTALLATION INSTRUCTIONS ARE AVAILABLE AS A KIT & MAY BE ORDERED UNDER P/N AK180-77		

FIGURE AND INDEX NO.	PART NUMBER	DESCRIPTION 1 2 3 4 5 6 7	UNITS PER ASSY	USABLE ON CODE
14 -		AILERON INSTALLATION LH	NP	
		AILERON INSTALLATION RH	NP	
- 1	0523223	BELLCRANK-AILERON LH	1	
	0523223-1	BELLCRANK-AILERON RH	1	
		ATTACHING PARTS		
- 2	AN4-42A	BOLT	2	
- 3	0522629	WASHER	2	
- 4	0523221	BUSHING	1	
- 5	0523222	BUSHING	1	
- 6	NAS679A4	NUT	2	
		---*---		
- 7	0422280	BUSHING	2	
- 8	8610	BEARING TOR	2	
- 9	0523218	ROD ASSEMBLY-AILERON PUSH PULL	1	
		ATTACHING PARTS		
-10	AN3-7A	BOLT	2	
-11	MS21044N3	NUT	2	
		---*---		
-12	S1819-3	ROD END	2	
-13	AN316-4R	NUT-CHECK	2	
	0523800-19	AILERON ASSEMBLY-LH	1	A
	0523800-16	AILERON ASSEMBLY-LH WEU 0523800-25	1	B
	0523800-25	AILERON ASSEMBLY-LH	1	B
	0523800-18	AILERON ASSEMBLY-RH	1	A
	0523800-17	AILERON ASSEMBLY-RH WEU 0523800-24	1	B
	0523800-24	AILERON ASSEMBLY-RH	1	B
		ATTACHING PARTS		
-13A	NAS221-8	SCREW	12	
	MS21044N3	NUT	12	
		---*---		
-14	0523806	SPAR-AILERON LH	1	
	0523806-1	SPAR-AILERON RH	1	
-15	0523808	RIB NO. 1-AILERON LH	2	
	0523808-2	RIB NO. 1-AILERON RH	2	

CONTINUED ON NEXT PAGE

Wing (Cont)

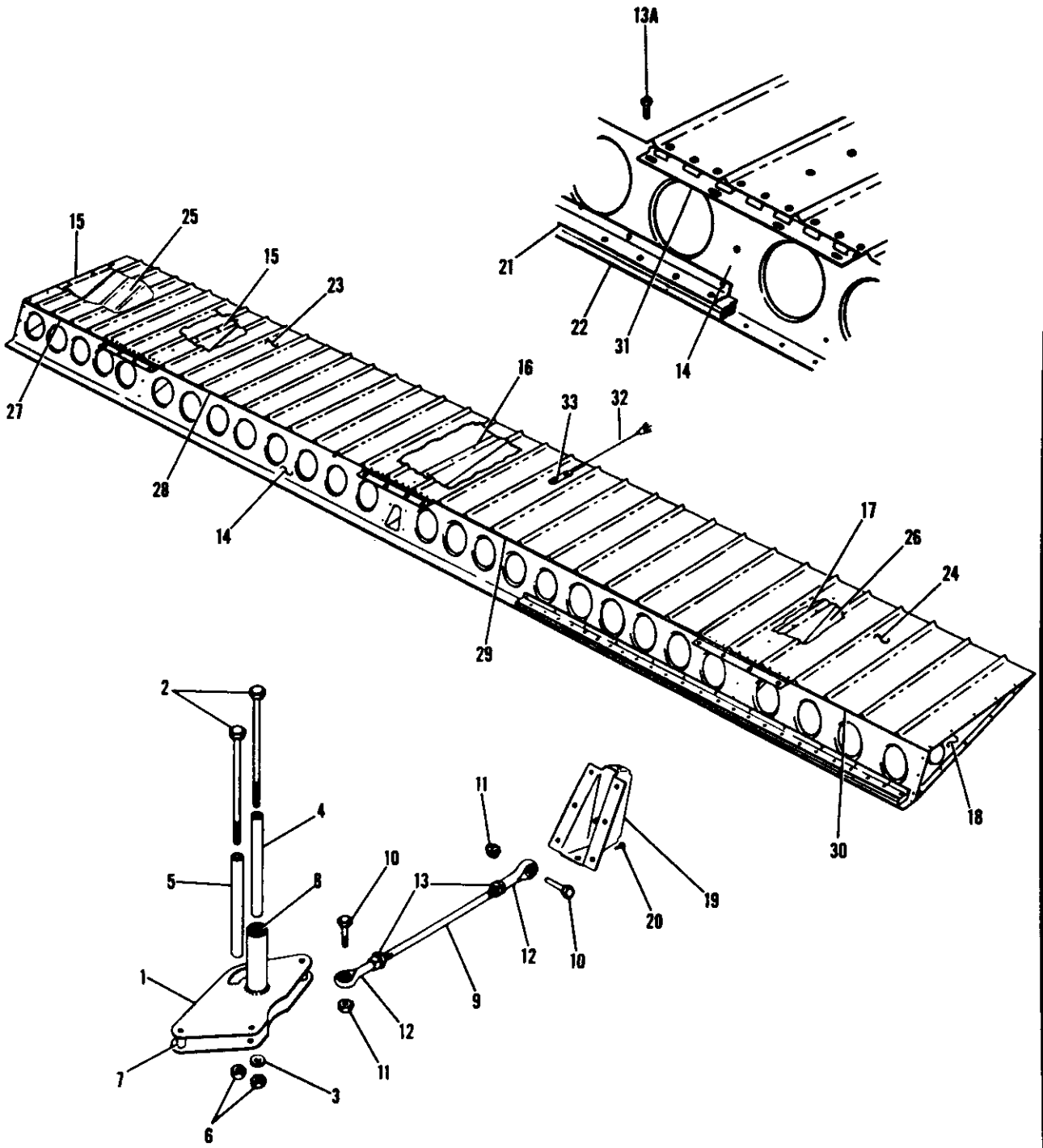

Figure 14. Aileron Installation

FIGURE AND INDEX NO.	PART NUMBER	DESCRIPTION 1 2 3 4 5 6 7	UNITS PER ASSY	USABLE ON CODE
14 -16	0523809	RIB NO. 2-AILERON LH	1	
	0523809-1	RIB NO. 2-AILERON RH	1	
-17	0523810	RIB NO. 3-AILERON	1	
-18	0523811	RIB NO. 4-AILERON RH	1	
	0523811-1	RIB NO. 4-AILERON LH	1	
-19	0523812-2	BRACKET-AILERON CONTROL LH WEU 0760011-2	1	E
	0523812-3	BRACKET-AILERON CONTROL RH WEU 0760011-2	1	E
	0760111-2	BRACKET-AILERON CONTROL	1	F
		ATTACHING PARTS		
-20	NAS455-163C4-8	RIVET	6	
		---*---		
-21	0523814-7	BRACKET-AILERON WEIGHT	1	A
	0523814-5	BRACKET-AILERON WEIGHT WEU 0523814-8	1	B
	0523814-8	BRACKET-AILERON WEIGHT	1	B
-22	0724115-2	WEIGHT-AILERON BALANCE	5	A
	0724115-1	WEIGHT-AILERON BALANCE USED ON 0523800-16 & -17	3	B
	0724115-1	WEIGHT-AILERON BALANCE USED ON 0523800-24 & -25	2	B
	0724115-3	WEIGHT-AILERON BALANCE USED ON 0523800-24 & -25	1	B
	0724115-4	WEIGHT-AILERON BALANCE USED ON 0523800-24 & -25	1	B
-23	0523800-6	SKIN-AILERON UPPER INBOARD LH	1	
	0523800-7	SKIN-AILERON UPPER INBOARD RH	1	
-24	0523800-8	SKIN-AILERON UPPER OUTBOARD LH	1	
	0523800-9	SKIN-AILERON UPPER OUTBOARD RH	1	
-25	0523800-10	SKIN-AILERON LOWER INBOARD LH	1	
	0523800-11	SKIN-AILERON LOWER INBOARD RH	1	
-26	0523800-12	SKIN-AILERON LOWER OUTBOARD LH	1	
	0523800-13	SKIN-AILERON LOWER OUTBOARD RH	1	
-27	0523813-1	SPACER	1	
-28	0523813-8	SPACER	1	
-29	0523813-6	SPACER	1	
-30	0523813-7	SPACER	1	
-31	0523807	HINGE-AILERON	3	
-32	5169	STATIC DISCHARGER WHEN EXHAUSTED USE C592001-0101	2	C
	C592001-0101	STATIC DISCHARGER	2	D
		ATTACHING PARTS		
-33	AN515-8R8	SCREW	2	C
	AN515-6R8	SCREW	2	D
	NAS1329A08K75	RIVNUT	2	C
	NAS1329A06K75	RIVNUT	2	D
		---*---		

NOTE. ON LEFT HAND AILERON, IF THE NO. 4 RIB OUTBOARD HAS FLANGES TURNED OUT FROM CENTER OF AILERON ORDER 0523811 RIB, IF RIB HAS FLANGES TURNED INBOARD ORDER 0523811-1 RIB.

ON LEFT HAND AILERON, THE NO.1 RIB INBOARD IS AN 0523808 RIB FOR ALL SERIALS.

ON RIGHT HAND AILERON, IF THE NO. 4 RIB OUTBOARD HAS FLANGES TURNED OUT FROM CENTER OF AILERON ORDER 0523811-1 RIB. IF RIB HAS FLANGES TURNED INBOARD ORDER 0523811 RIB.

ON RIGHT HAND AILERON, IF THE NO. 1 RIB INBOARD HAS FLANGES TURNED OUT FROM CENTER OF AILERON ORDER 0523808 RIB. IF RIB HAS FLANGES TURNED TOWARD CENTER OF AILERON ORDER 0523802-2 RIB.

A---SERIAL 18051397 THRU 18052384
SERIAL 185-0001 THRU 18502310
B---SERIAL 18051184 THRU 18051396
C---SERIAL 18051446 THRU 18051906
SERIAL 185-0777 THRU 185-1335
D---SERIAL 18051907 THRU 18052384
SERIAL 185-1336 THRU 18502310
E---SERIAL 18051184 THRU 18052017
SERIAL 185-0001 THRU 185-1479
F---SERIAL 18052018 THRU 18052384
SERIAL 185-1480 THRU 18502310

Wing (Cont)

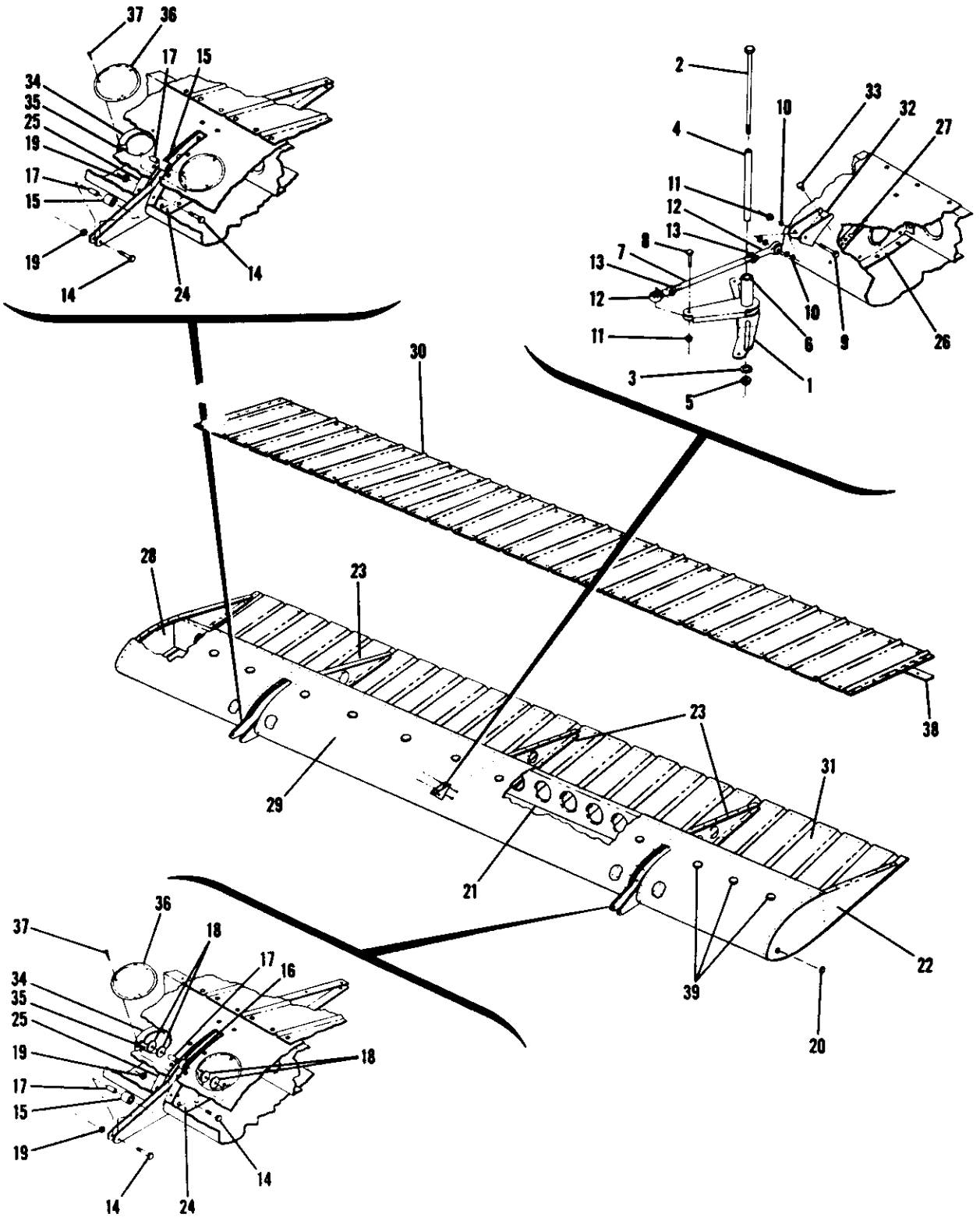

Figure 15. Flap Installation

FIGURE AND INDEX NO.	PART NUMBER	DESCRIPTION 1 2 3 4 5 6 7	UNITS PER ASSY	USABLE ON CODE
15 -		FLAP INSTALLATION LH	NP	
		FLAP INSTALLATION RH	NP	
- 1	0523535	BELLCRANK ASSEMBLY-FLAP LH	1	
	0523535-1	BELLCRANK ASSEMBLY-FLAP RH	1	
		ATTACHING PARTS		
- 2	AN4-60A	BOLT	1	
- 3	0522629	WASHER-FLAP BELLCRANK	1	
- 4	0523536	BUSHING	1	
- 5	NAS679A4	NUT	1	
		---*---		
- 6	B610	BEARING TOR	2	
- 7	0523537	ROD ASSEMBLY-FLAP PUSH PULL	1	
		ATTACHING PARTS		
- 8	AN3-6A	BOLT	1	
- 9	AN3-11A	BOLT	1	
-10	AN960-10	WASHER	5	
-11	MS21044N3	NUT	2	
		---*---		
-12	S1106-3	ROD END	2	
-13	AN316-4R	NUT-CHECK	2	
	0523901 *	FLAP ASSEMBLY-WING LH WHEN EXHAUSTED USE 0523901-31	1	A
	0523901-31 *	FLAP ASSEMBLY-WING LH WEU 0523901-35	1	B
	0523901-35 *	FLAP ASSEMBLY-WING LH	1	B
	0523901-1 *	FLAP ASSEMBLY-WING RH WHEN EXHAUSTED USE 0523901-32	1	A
	0523901-32 *	FLAP ASSEMBLY-WING RH WEU 0523901-38	1	B
	0523901-38 *	FLAP ASSEMBLY-WING RH	1	B
		ATTACHING PARTS		
-14	AN3-10A	BOLT	4	
-15	0523921	ROLLER ASSEMBLY	3	
-16	0523920	ROLLER ASSEMBLY	1	
-17	0523919	BUSHING	4	
-18	0523922	SPACER-FLAP OUTBOARD ROLLER ONLY	4	
-19	MS21044N3	NUT	4	
		---*---		
-20	48172	PLUG BUTTON UC	1	
-21	0523911	SPAR-FLAP LH	1	
	0523911-1	SPAR-FLAP RH	1	
-22	0523912-1	RIB-FLAP LH END	1	
-23	0523923	RIB-FLAP TRAILING EDGE	3	
-24	0523901-13	RIB ASSEMBLY-FLAP SUPPORT ARM LH	2	
-25	0523901-14	RIB ASSEMBLY-FLAP SUPPORT ARM RH	2	
-26	0523914	RIB ASSEMBLY-FLAP LEADING EDGE CENTER	1	
-27	NAS680A3	NUTPLATE	2	
-28	0523912	RIB-FLAP RH END	1	
-29	0523901-2	SKIN-FLAP LEADING EDGE LH	1	
	0523901-3	SKIN-FLAP LEADING EDGE RH	1	
-30	0523901-4	SKIN-FLAP UPPER LH USED ON 0523901-0 & -31	1	
	0523901-36	SKIN-FLAP UPPER LH USED ON 0523901-35	1	
	0523901-5	SKIN-FLAP UPPER RH USED ON 0523901-1 & -32	1	
	0523901-39	SKIN-FLAP UPPER RH USED ON 0523901-38	1	
-31	0523901-6	SKIN-FLAP LOWER LH	1	
	0523901-7	SKIN-FLAP LOWER RH	1	
-32	0523918	BRACKET-FLAP CONTROL ATTACHMENT	1	
		ATTACHING PARTS		
-33	AN3-4A	BOLT	2	
		---*---		
-34	S237-4	DOUBLER ASSEMBLY-ACCESS OPENING	4	
-35	NAS395-14-3	NUT	3	
-36	S225-3	PLATE-COVER	4	
		ATTACHING PARTS		
-37	S1021Z8-8	SCREW	3	
		---*---		
-38	0523901-29	STRIP-REINFORCEMENT WEU 0523901-37	1	B
	0523901-37	STRIP-REINFORCEMENT	1	B
-39	S1093-1 #	PLUG BUTTON-ANTI FRICTION	14	

NOTE. *WHEN ORDERING THESE ASSEMBLIES ALSO ORDER PARTS MARKED #.

A---SERIAL 18051184 THRU 18051792
SERIAL 185-0001 THRU 185-1167
B---SERIAL 18051793 THRU 18052384
SERIAL 185-1168 THRU 18502310

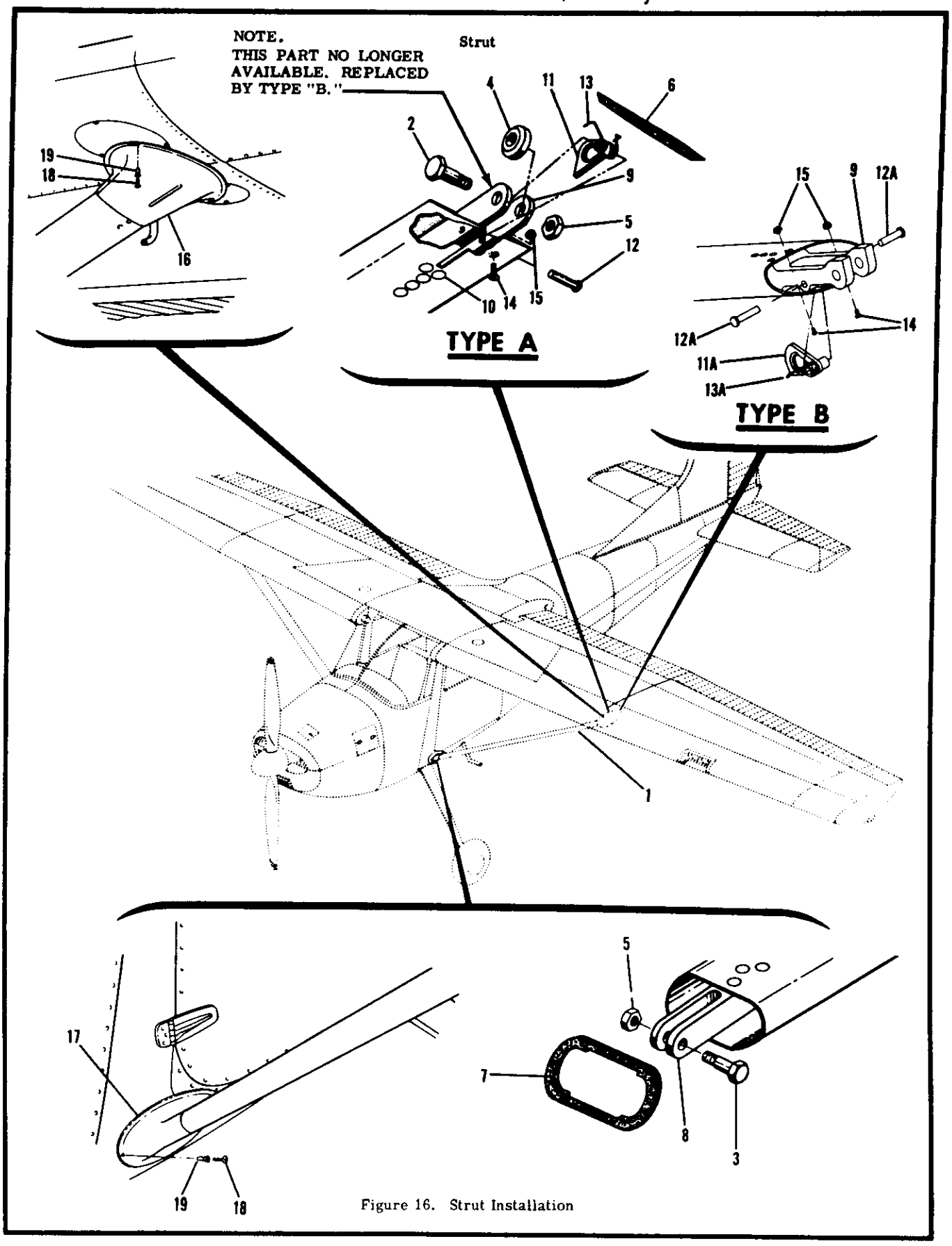

Figure 16. Strut Installation

FIGURE AND INDEX NO.	PART NUMBER	DESCRIPTION 1 2 3 4 5 6 7	UNITS PER ASSY	USABLE ON CODE
16 -		STRUT INSTALLATION-WING	NP	
- 1	0723600-7	STRUT ASSEMBLY-LH	1	A
	0723600-17	STRUT ASSEMBLY-LH	1	B
	0723600-8	STRUT ASSEMBLY-RH	1	A
	0723600-18	STRUT ASSEMBLY-RH	1	B
		ATTACHING PARTS		
- 2	AN8-25A	BOLT	1	
	AN960-816	WASHER	AR	
- 3	AN8-17A	BOLT	1	
- 4	0523307	SPACER	1	E
	0523307-2	SPACER	1	F
- 5	MS20365-820C	NUT	2	
- 6	0713018-1 #	SEAL	1	A
	0713180-1	SEAL	1	B
- 7	0713181-1	SEAL	1	B
		---*---		
- 8	0523608-2	FITTING-WING STRUT LOWER END	1	
- 9	0523614-1 *	FITTING-WING STRUT UPPER END	1	
		ATTACHING PARTS		
-10	MS20426AD10-32	RIVET	5	
	0723600-6	RIVET ALT	5	
		---*---		
-11	0723604-1	RING-MOORING	1	C
-11A	0523615-1	RING-MOORING	1	D
		ATTACHING PARTS		
-12	MS20392-2C53	PIN	1	C
-12A	MS20392-2C25	PIN	2	D
-13	0723601-2	SPRING	1	C
-13A	0523616-1	SPRING	1	D
-14	AN507-832R6	SCREW	1	C
	AN507-832R6	SCREW	2	D
-15	NAS679A08	NUT	1	C
	NAS679A08	NUT	2	D
		---*---		
		FAIRING INSTALLATION-WING STRUT	NP	A
-16	0723605-3-791	FAIRING-UPPER LH	1	
	0723605-4-791	FAIRING-UPPER RH	1	
-17	0723605-1-791	FAIRING-LOWER LH	1	
	0723605-2-791	FAIRING-LOWER RH	1	
		ATTACHING PARTS		
-18	AN515-8R8	SCREW	3	
-19	NAS1329A08K75	RIVNUT	1	
		---*---		

NOTE. #DO NOT USE WHEN STRUT FAIRINGS ARE INSTALLED

NOTE. *WHEN INITIALLY ORDERING THIS PART FOR 180 AIRCRAFT WITH TYPE A TIE DOWN PROVISIONS ALSO ORDER PARTS CODED D.

WHEN INITIALLY ORDERING THIS PART FOR 185 AIRCRAFT WITH TYPE A TIE DOWN PROVISIONS ALSO ORDER ONE 0523615-1, ONE MS20392-2-53, ONE 0533616-1, ONE AN507-832R6 & ONE MS20365-832C

A---SERIAL 18051184 THRU 18052384
B---SERIAL 185-0001 THRU 18502310
C---USED ON TYPE A. SEE DETAIL
D---USED ON TYPE B. SEE DETAIL
E---SERIAL 18051184 THRU 18052284
SERIAL 185-0001 THRU 18502090
F---SERIAL 18052285 THRU 18052384
SERIAL 18502091 THRU 18502310

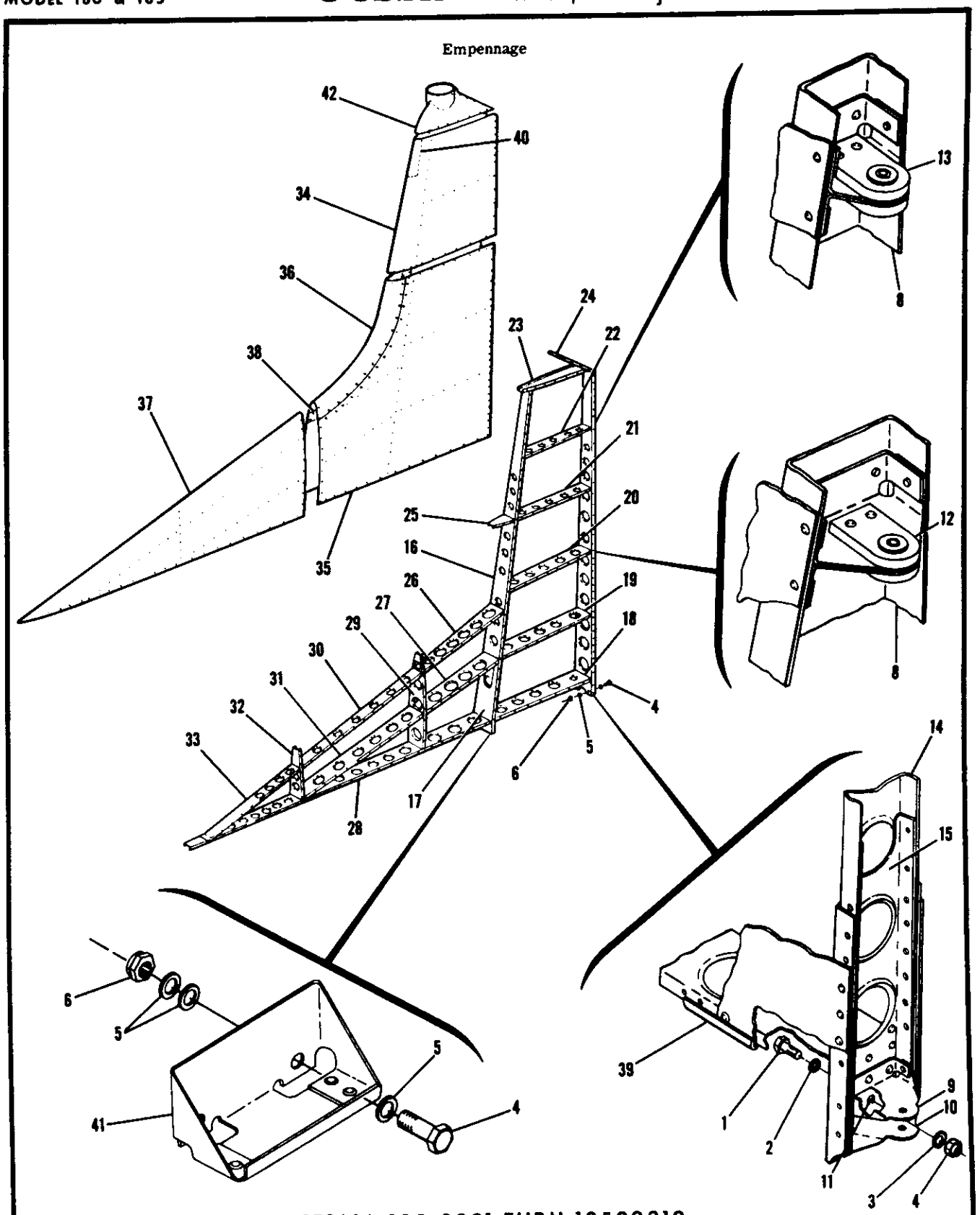

SERIAL 185-0001 THRU 18502310

Figure 17. Fin & Dorsal Installation

FIGURE AND INDEX NO.	PART NUMBER		DESCRIPTION 1 2 3 4 5 6 7	UNITS PER ASSY	USABLE ON CODE
17 -			FIN & DORSAL INSTALLATION	NP	A
	0731001-10	*	FIN ASSEMBLY WHEN EXHAUSTED USE 0731001-200	1	B
	0731001-200	#	FIN ASSEMBLY	1	F
	0731001-201		FIN ASSEMBLY	1	H
			ATTACHING PARTS		
- 1	AN5-6A		BOLT	1	D
	NAS145-16	%	BOLT	1	E
- 2	AN960-516		WASHER	1	D
	MS20002C5	%	WASHER	1	E
- 3	AN960-516	%	WASHER	1	E
- 4	NAS679A5	%	NUT	4	
- 5	AN6-7A		BOLT	12	
- 6	AN960-616		WASHER	4	
- 7	NAS679A6		NUT		
			---*---		
- 8	0731001-7		SPAR ASSEMBLY-REAR WEU 0731001-14	1	D
	0731001-14	#	SPAR ASSEMBLY-REAR	1	E
- 9	0731100-14		BRACKET-LOWER HINGE	1	
-10	0731100-13		BRACKET-LOWER HINGE	1	
-11	NAS680A5		NUTPLATE	1	D
-12	0731100-9		HINGE ASSEMBLY-CENTER	1	
-13	0731100-7		HINGE ASSEMBLY-UPPER	1	
-14	0731000-33		CHANNEL-REINFORCEMENT	1	
-15	0731013-1		PLATE-REINFORCEMENT	1	
	0731001-8		SPAR ASSEMBLY-FRONT	1	
-16	0731012-1		SPAR-FRONT	1	
-17	0731000-37		CHANNEL	1	
-18	0731000-1		RIB-FIN	1	G
	0731024-5		RIB ASSEMBLY-FIN	6	H
	NAS697A08		NUTPLATE	1	H
-19	0731000-2		RIB-FIN	1	
-20	0731000-3		RIB-FIN	1	
-21	0731000-4		RIB-FIN	1	
-22	0731000-5		RIB-FIN	1	
-23	0731021-1		RIB ASSEMBLY-FIN TIP	2	
	A6194-8Z1		NUTPLATE TIN	1	
-24	0731010-1		RIB-CANTED	1	
-25	0731018-1		RIB-FIN NOSE	1	
-26	0731007-1		RIB-DORSAL	1	
-27	0731003-1		RIB-DORSAL	1	
-28	0731004-1		RIB-DORSAL	1	
-29	0731005-1		RIB-DORSAL	1	
-30	0731008-1		RIB-DORSAL	1	
-31	0731006-1		RIB-DORSAL	1	
-32	0731002-1		RIB DORSAL	1	
-33	0731009-1		RIB DORSAL	1	
-34	0731001-2		SKIN-UPPER FIN	1	
-35	0731001-3		SKIN-LOWER FIN LH	1	
	0731001-4		SKIN-LOWER FIN RH	1	
-36	0731001-5		SKIN-FRONT EDGE	1	
-37	0731001-6		SKIN-DORSAL	2	
-38	0731001-9		PLATE-SPLICE	1	
-39	S202RB		CHANNEL-178.00 IN LG BULK ITEM REF S202R17800B	1	
-40	0731000-51		DOUBLER	1	
-41	0712213		STOP-STABILIZER	1	B
-42	0731015-1		TIP-FIN	1	C
	0731019-2-791		TIP ASSEMBLY-FIN		
			ATTACHING PARTS		
	S1021Z8-8		SCREW	24	
	NAS395-16-3		NUT	22	
			---*---		

NOTE. *THIS ASSEMBLY INCLUDES 0731015-1 FIN TIP.

NOTE. #WHEN INITIALLY ORDERING THIS ASSY FOR AIRCRAFT PRIOR TO SERIAL 18502028 ALSO ORDER ATTACHING PARTS MARKED %.

A---SERIAL 185-0001 THRU 18502310
B---SERIAL 185-0001 THRU 185-1149
C---SERIAL 185-1150 THRU 18502310
D---SERIAL 185-0001 THRU 18502027
E---SERIAL 18502028 THRU 18502310
F---SERIAL 185-1150 THRU 18502090
G---SERIAL 185-0001 THRU 18502090
H---SERIAL 18502091 THRU 18502310

Empennage (Cont)

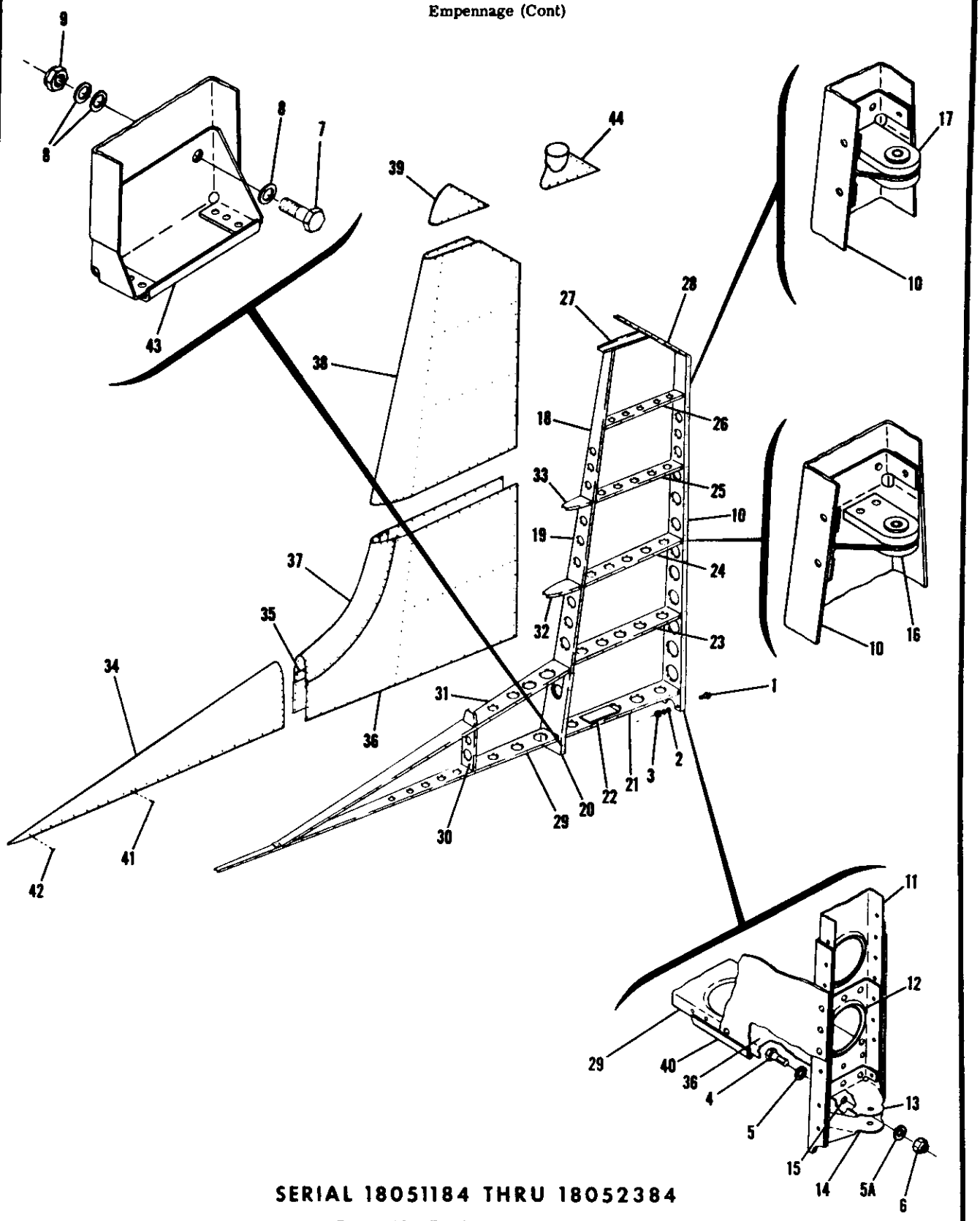

SERIAL 18051184 THRU 18052384

Figure 18. Fin & Dorsal Installation

FIGURE AND INDEX NO.	PART NUMBER		DESCRIPTION 1 2 3 4 5 6 7	UNITS PER ASSY	USABLE ON CODE
18 -			FIN & DORSAL INSTALLATION	NP	A
	0731000-41		FIN ASSEMBLY WEU 0731000-83	1	F
	073100-83	*	FIN ASSEMBLY	1	H
	0731024-3		FIN ASSEMBLY	1	K
			ATTACHING PARTS		
- 1	NAS224-15		SCREW	2	D
	AN6-7A		BOLT	2	E
- 2	AN960-616		WASHER	2	D
	AN960-616L		WASHER	2	D
	AN960-616		WASHER	6	E
- 3	NAS679A6		NUT	2	
- 4	AN5-6A		BOLT	1	F
	NAS145-16	%	BOLT	1	G
- 5	AN960-516		WASHER	1	F
	MS20002C5	%	WASHER	1	G
- 5A	AN960-516	%	WASHER	1	G
- 6	NAS697A5	%	NUT	1	G
- 7	AN6-7A		BOLT	2	
- 8	AN960-616		WASHER	6	
- 9	NAS679A6		NUT	2	
			---*---		
	0731000-32		SPAR ASSEMBLY-REAR WEU 0731000-87	1	F
	0731000-87	*	SPAR ASSEMBLY-REAR	1	G
-10	0731000-34		SPAR-REAR	1	
-11	0731000-33		CHANNEL-REINFORCEMENT	1	
-12	0731000-43		PLATE	1	
-13	0731100-14		BRACKET-HINGE UPPER	1	
-14	0731100-13		BRACKET-HINGE LOWER	1	
-15	NAS680A5		NUTPLATE	1	F
-16	0731100-9		HINGE ASSEMBLY-CENTER	1	
-17	0731100-7		HINGE ASSEMBLY-UPPER	1	
-18	0731000-38		SPAR ASSEMBLY-FRONT	1	
-19	0731000-11		SPAR-FIN FRONT	1	
-20	0731000-37		CHANNEL-REINFORCEMENT	1	
-21	0731000-60		RIB ASSEMBLY-FIN	1	J
	0731024-5		RIB ASSEMBLY	1	K
-22	0770762-1		MOUNTING PLATE-BCN FLASHER	1	J
-23	0731000-2		RIB-FIN	1	
-24	0731000-3		RIB-FIN	1	
-25	0731000-4		RIB-FIN	1	
-26	0731000-5		RIB-FIN	1	
-27	0731022-2		RIB ASSEMBLY-FIN TIP	1	
	A6194-8Z1		NUTPLATE TIN	2	
-28	0731022-4		RIB-FIN TIP CANTED	1	
-29	0731000-16		RIB-DORSAL LOWER	1	
-30	0731000-23		RIB-DORSAL	1	
-31	0731000-15		RIB-DORSAL UPPER	1	
-32	0731000-12		RIB-FIN LEADING EDGE WEU 1631010-2	1	F
	1631010-2		RIB-FIN LEADING EDGE	1	G
-33	0731000-22		RIB-FIN LEADING EDGE WEU 1631010-1	1	F
	1631010-1		RIB-FIN LEADING EDGE	1	G
-34	0731000-25		SKIN-DORSAL	1	
-35	0731000-17		PLATE-SPLICE	2	
-36	0731000-18		SKIN-FIN LOWER	2	
-37	0731000-21		SKIN-LEADING EDGE	1	
-38	0731000-24		SKIN-FIN UPPER	1	
-39	0731000-200-791		TIP-FIN	1	
			ATTACHING PARTS		
	S1021Z8-8		SCREW	18	
	NAS395-16-3		NUT	16	
			---*---		
-40	S202RB		CHANNEL-120.0 IN LG BULK ITEM REF 0411875-24	1	
-41	S1021Z8-8		SCREW	2	
-42	S1021Z6-8		SCREW	2	

CONTINUED ON NEXT PAGE

FIGURE AND INDEX NO.	PART NUMBER	DESCRIPTION 1 2 3 4 5 6 7	UNITS PER ASSY	USABLE ON CODE
18 -43	0712213	STOP-STABILIZER ----------	1	B
-44	0700031-2	TIP ASSEMBLY-FIN USED WITH ROTATING BEACON ----------	1	B
	0731019-1-791	TIP ASSEMBLY-FIN USED WITH FLASHING BEACON ----------	1	C
		NOTE. *WHEN INITIALLY ORDERING THIS ASSY FOR AIRCRAFT PRIOR TO SERIAL 18052259 ALSO ORDER ATTACHING PARTS MARKED %.		
		A---SERIAL 18051184 THRU 18052384		
		B---SERIAL 18051184 THRU 18051774		
		C---SERIAL 18051775 THRU 18052384		
		D---SERIAL 18051184 THRU 18051312		
		E---SERIAL 18051313 THRU 18052384		
		F---SERIAL 18051184 THRU 18052258		
		G---SERIAL 18052259 THRU 18052384		
		H---SERIAL 18052259 THRU 18052284		
		J---SERIAL 18051184 THRU 18052284		
		K---SERIAL 18052285 THRU 18052384		

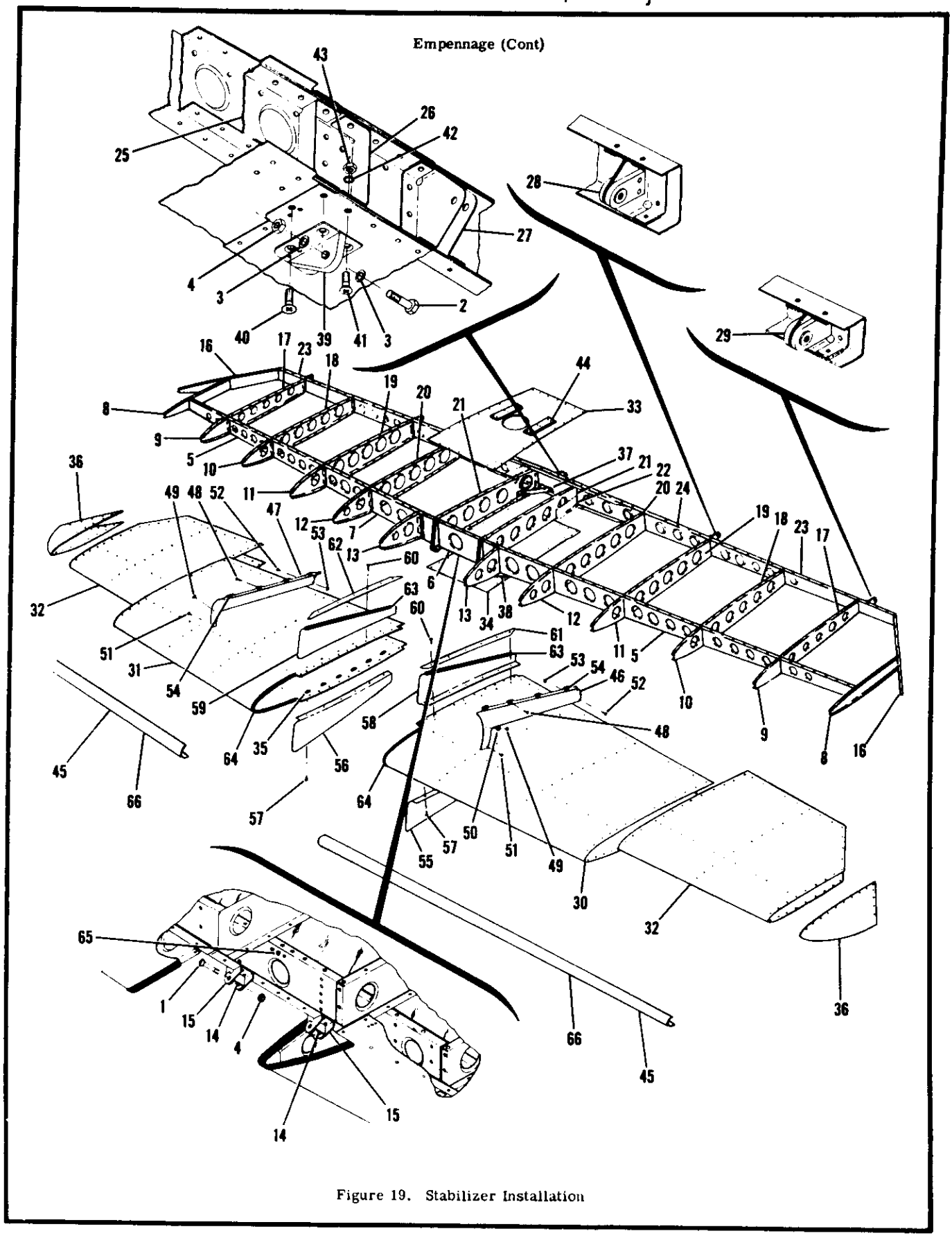

Figure 19. Stabilizer Installation

FIGURE AND INDEX NO.	PART NUMBER	DESCRIPTION 1 2 3 4 5 6 7	UNITS PER ASSY	USABLE ON CODE
19 -		STABILIZER INSTALLATION	NP	
	1232000-8	STABILIZER ASSEMBLY	1	A
	0732600-4	STABILIZER ASSEMBLY	1	B
		ATTACHING PARTS		
- 1	AN4-15A	BOLT	2	
- 2	AN4-11A	BOLT	2	
- 3	AN960-416	WASHER	4	
- 4	NAS679A4	NUT	4	
		---*---		
	1232000-6	SPAR ASSEMBLY-STABILIZER FRONT	1	A
	0732605-2	SPAR ASSEMBLY-STABILIZER FRONT	1	B
- 5	0732607-1	SPAR-STABILIZER FRONT	2	
- 6	1232116	CHANNEL-STABILIZER FRONT	1	A
	0732606-3	CHANNEL-STABILIZER FRONT	1	B
- 7	1232117	SPLICE-STABILIZER FRONT	1	A
- 8	0732609-1	RIB-STABILIZER TIP	2	
- 9	0732611-1	RIB-STABILIZER NOSE	2	
-10	0732611-2	RIB-STABILIZER NOSE	2	
-11	0732611-3	RIB-STABILIZER NOSE	2	
-12	0732611-4	RIB-STABILIZER NOSE	2	
-13	0732611-6	RIB-STABILIZER CANTED	2	
-14	0732101-6	BRACKET-STABILIZER ATTACH UPPER	2	
-15	0732101-5	BRACKET-STABILIZER ATTACH LOWER	2	
-16	0732608-1	RIB-STABILIZER CANTED	2	
-17	0732610-5	RIB-STABILIZER	2	
-18	0732610-4	RIB-STABILIZER	2	
-19	1232104	RIB-STABILIZER	2	A
	0732610-3	RIB-STABILIZER	2	B
-20	1232105	RIB-STABILIZER	2	A
	0732610-2	RIB-STABILIZER	2	B
-21	1232106	RIB-STABILIZER	2	A
	0732610-1	RIB-STABILIZER	2	B
-22	0732103-1	DOUBLER-STABILIZER LH	1	
	0732103-2	DOUBLER-STABILIZER RH	1	
	1232000-5	SPAR ASSEMBLY-STABILIZER REAR	1	A
	0732602-1	SPAR ASSEMBLY-STABILIZER REAR	1	B
-23	0732602-2	SPAR-STABILIZER REAR	2	
-24	1232114-1	CHANNEL-STABILIZER REAR SPAR REINFORCEMENT	1	A
	0732604-1	CHANNEL-STABILIZER REAR SPAR REINFORCEMENT	1	B
-25	0732603-1	CHANNEL-STABILIZER REAR SPAR REINFORCEMENT	1	
-26	0732101-4	REINFORCEMENT-STABILIZER HINGE	2	
-27	0732100-6	HINGE-STABILIZER CENTER	2	
-28	0732100-7	HINGE ASSEMBLY-STABILIZER INBOARD	1	
	MS24462-4	BEARING	1	
-29	0732100-8	HINGE ASSEMBLY-STABILIZER OUTBOARD	1	
	MS24462-4	BEARING	1	
-30	0732600-5	SKIN-STABILIZER INBOARD LH	1	
-31	0732600-6	SKIN-STABILIZER INBOARD RH	1	
-32	0732600-2	SKIN-STABILIZER OUTBOARD	2	
-33	0732600-7	SKIN-STABILIZER CENTER UPPER	1	
-34	0732600-3	SKIN-STABILIZER CENTER LOWER	1	
-35	S1863-3A	NUT	24	
-36	0732613-3-791	TIP-STABILIZER	2	A
	0732613-1-791	TIP-STABILIZER	2	B
-37	0732106	REINFORCEMENT RH	1	
	0732106-1	REINFORCEMENT LH	1	
-38	1232118-1	DOUBLER-STABILIZER LH LOWER	1	A
	1232118-1	DOUBLER-STABILIZER RH UPPER	1	A
	1232118-2	DOUBLER-STABILIZER RH LOWER	1	A
	1232118-2	DOUBLER-STABILIZER LH UPPER	1	A
-39	0732101-11	HINGE ASSEMBLY-LH	1	
	0732101-10	HINGE ASSEMBLY-RH	1	
		ATTACHING PARTS		
-40	AN509-416R12	SCREW	1	
-41	AN509-416R13	SCREW	2	
-42	AN960-416	WASHER	4	
-43	NAS679A4	NUT	4	
		---*---		
	0760679-2	BUSHING	1	
	0732101-7	SPACER	1	
-44	0732616-1	RUB STRIP	2	C
	0732621-1	RUB STRIP	2	D
-45	1232000-7	DOUBLER	2	A

CONTINUED ON NEXT PAGE

FIGURE AND INDEX NO.	PART NUMBER	DESCRIPTION 1 2 3 4 5 6 7	UNITS PER ASSY	USABLE ON CODE
19 -46	0712307-1	FAIRING-EMPENNAGE LH	1	
-47	0712307-2	FAIRING-EMPENNAGE RH	1	
		ATTACHING PARTS		
-48	S1021Z6-8	SCREW	4	
-49	AN515-8R8	SCREW	2	
-50	AN960-8L	WASHER	2	
-51	AN507-832R8	SCREW	1	
-52	S1021Z8-8	SCREW	2	
-53	NAS395-10-3	NUT	2	
		---*---		
		NUT	4	
-54	NAS395-6-3	SEAL-STABILIZER LOWER LH	1	
-55	0732102-3	SEAL-STABILIZER LOWER RH	1	
-56	0732102-4	ATTACHING PARTS		
-57	S1021Z6-6	SCREW	6	
		---*---		
-58	0732102-7	SEAL ASSEMBLY-STABILIZER UPPER LH	1	
-59	0732102-8	SEAL ASSEMBLY-STABILIZER UPPER RH	1	
		ATTACHING PARTS		
-60	S1021Z6-6	SCREW	6	
-61	0732102-5	STIFFENER LH	1	
-62	0732102-6	STIFFENER RH	1	
		---*---		
-63	S202R8	MOULDING-18.75 IN.LG. BULK ITEM REF S-202R18.75B	AR	
-64	S202R8	MOULDING BULK ITEM	AR	
-65	NAS680A3	NUTPLATE	1	A
-66	0332136-6	BOOT-ABRASION	2	

A---SERIAL 185-0001 THRU 18502310
B---SERIAL 18051184 THRU 18052384
C---SERIAL 185-0001 THRU 18502258
SERIAL 18051184 THRU 18052361
D---SERIAL 18502259 THRU 18502310
SERIAL 18052362 THRU 18052384

FIGURE AND INDEX NO.	PART NUMBER	DESCRIPTION 1 2 3 4 5 6 7	UNITS PER ASSY	USABLE ON CODE
20 -	0733110-1	RUDDER ASSEMBLY	1	A
	0731000-40	RUDDER ASSEMBLY	1	B
		ATTACHING PARTS		
- 1	AN4-11A	BOLT	2	
- 2	AN960-416	WASHER	3	
- 3	NAS679A4	NUT	3	
- 4	AN4-12A	BOLT	1	
		---*---		
- 5	0731100-5	BRACKET-UPPER HINGE UPPER	1	B
- 6	0733110-2	SPAR ASSEMBLY-RUDDER	1	A
- 7	0731100-5	BRACKET-UPPER HINGE UPPER	1	A
- 8	0731100-6	BRACKET-UPPER HINGE LOWER	1	A
- 9	0731100-12	BRACKET-LOWER HING UPPER	1	A
-10	0731100-11	BRACKET-LOWER HINGE LOWER	1	A
-11	0733100	TUBE ASSEMBLY-TORQUE	1	A
	0731000-31	SPAR ASSEMBLY-RUDDER	1	B
-12	0733100	TUBE ASSEMBLY-TORQUE	1	B
-13	0731100-12	BRACKET-LOWER HINGE UPPER	1	B
-14	0731100-6	BRACKET-UPPER HINGE LOWER	1	B

CONTINUED ON NEXT PAGE

Empennage (Cont)

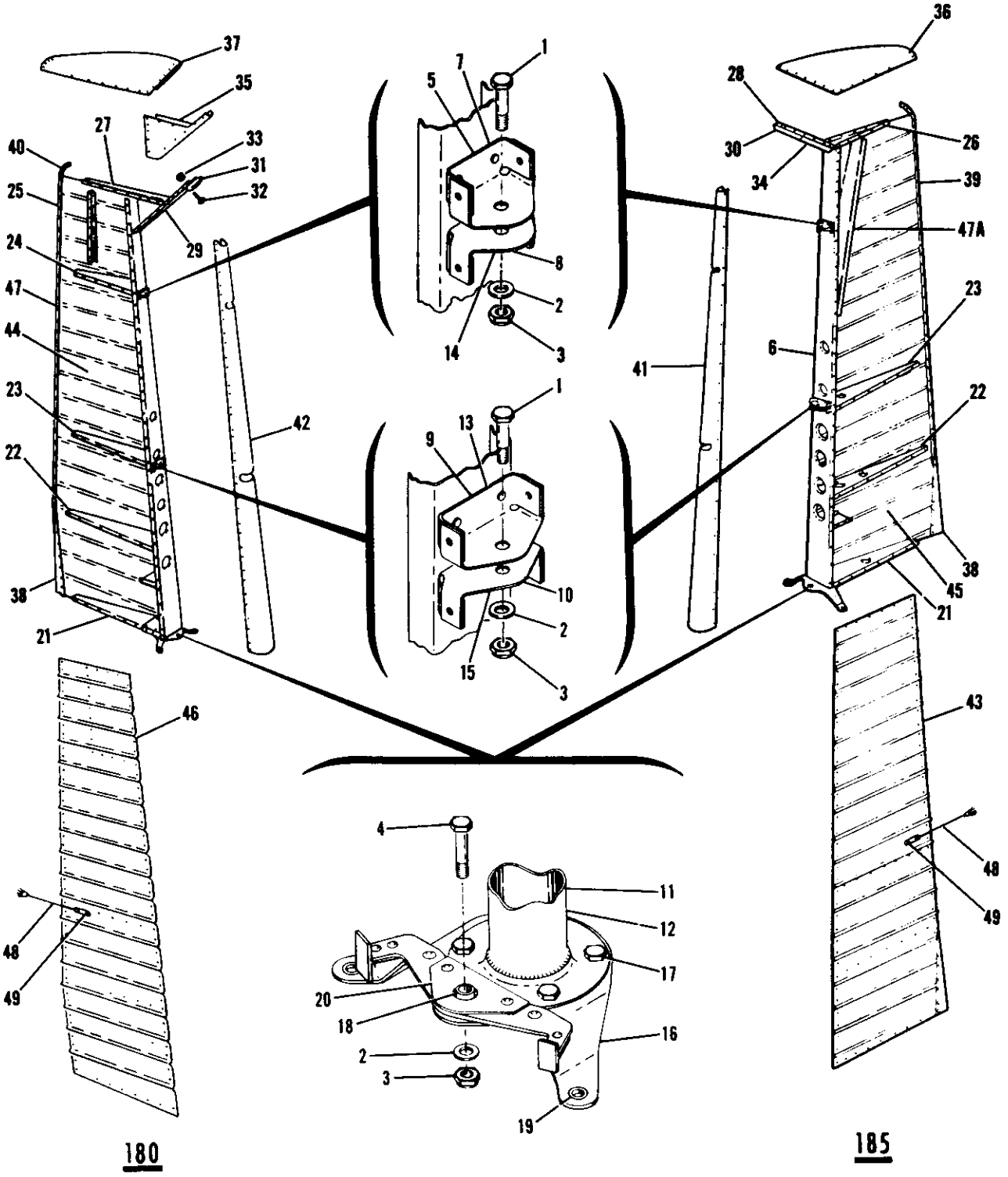

Figure 20. Rudder Assembly

FIGURE AND INDEX NO.	PART NUMBER	DESCRIPTION 1 2 3 4 5 6 7	UNITS PER ASSY	USABLE ON CODE
20 -15	0731100-11	BRACKET-LOWER HINGE LOWER	1	B
-16	0733102-5	BELLCRANK ASSEMBLY-RUDDER WEU 0733115-1	1	
	0733115-1	BELLCRANK ASSEMBLY-RUDDER	1	
		ATTACHING PARTS		
-17	AN3-5A	BOLT	4	
	AN960-10L	WASHER	8	
	MS21044N3	NUT	4	
		---*---		
-18	S1K5	BEARING FAF	1	
-19	0733103	BUSHING	2	
-20	0733102-3	RETAINER-BEARING	1	
-21	0731000-6	RIB-RUDDER	1	
-22	0731000-7	RIB-RUDDER	1	
-23	0731000-8	RIB-RUDDER	1	
-24	0731000-49	RIB-RUDDER	1	B
-25	0731000-50	STIFFENER	1	B
-26	0733107-1	RIB-RUDDER	1	A
-27	0731000-27	RIB-RUDDER	1	B
-28	0733106-1	RIB-RUDDER CANTED	1	A
-29	0731000-36	RIB-RUDDER CANTED	1	B
-30	0733108-1	WEIGHT-BALANCE	1	A
-31	0733101-1	WEIGHT-BALANCE	1	B
		ATTACHING PARTS		
-32	AN520-10R28	SCREW	1	
-33	22A21-22-02	NUT-FLOATING EN	1	B
		---*---		
-34	0733110-4	SKIN-RUDDER HORN WEU 0733110-6	1	A
	0733110-6	SKIN-RUDDER HORN	1	A
-35	0731000-9	SKIN-RUDDER HORN	1	B
-36	0733105-2	TIP ASSEMBLY-RUDDER	1	A
-37	0731000-19	TIP ASSEMBLY-RUDDER	1	B
		ATTACHING PARTS		
	CR163-4-4	RIVET CY	6	A
		---*---		
-38	0731000-30	TAB-RUDDER	1	
-39	0733110-3	SPACER-RUDDER	1	A
-40	0731000-45	SPACER-RUDDER	1	B
-41	0733110-5	SKIN-NOSE	1	A
-42	0731000-39	SKIN-NOSE	1	B
-43	0731000-53	SKIN-RUDDER LH	1	A
-44	0731000-13	SKIN-RUDDER LH	1	B
-45	0731000-52	SKIN-RUDDER RH	1	A
-46	0731000-14	SKIN-RUDDER RH	1	B
-47	0731000-35	SPACER	1	B
-47A	0733111-1	STIFFENER	1	D
-48	5169	STATIC DISCHARGER WHEN EXHAUSTED USE C592001-0101	1	C
	C592001-0101	STATIC DISCHARGER	1	E
		ATTACHING PARTS		
-49	AN515-8R8	SCREW	2	C
	AN515-6R8	SCREW	2	E
	NAS1329A08K75	RIVNUT	2	C
	NAS1329A06K75	RIVNUT	2	E
		---*---		
		A---SERIAL 185-0001 THRU 18502310		
		B---SERIAL 18051184 THRU 18052384		
		C---SERIAL 18051446 THRU 18051906		
		SERIAL 185-0777 THRU 185-1335		
		D---SERIAL 185-0877 THRU 18502310		
		E---SERIAL 18051907 THRU 18052384		
		SERIAL 185-1336 THRU 18502310		

Empennage (Cont)

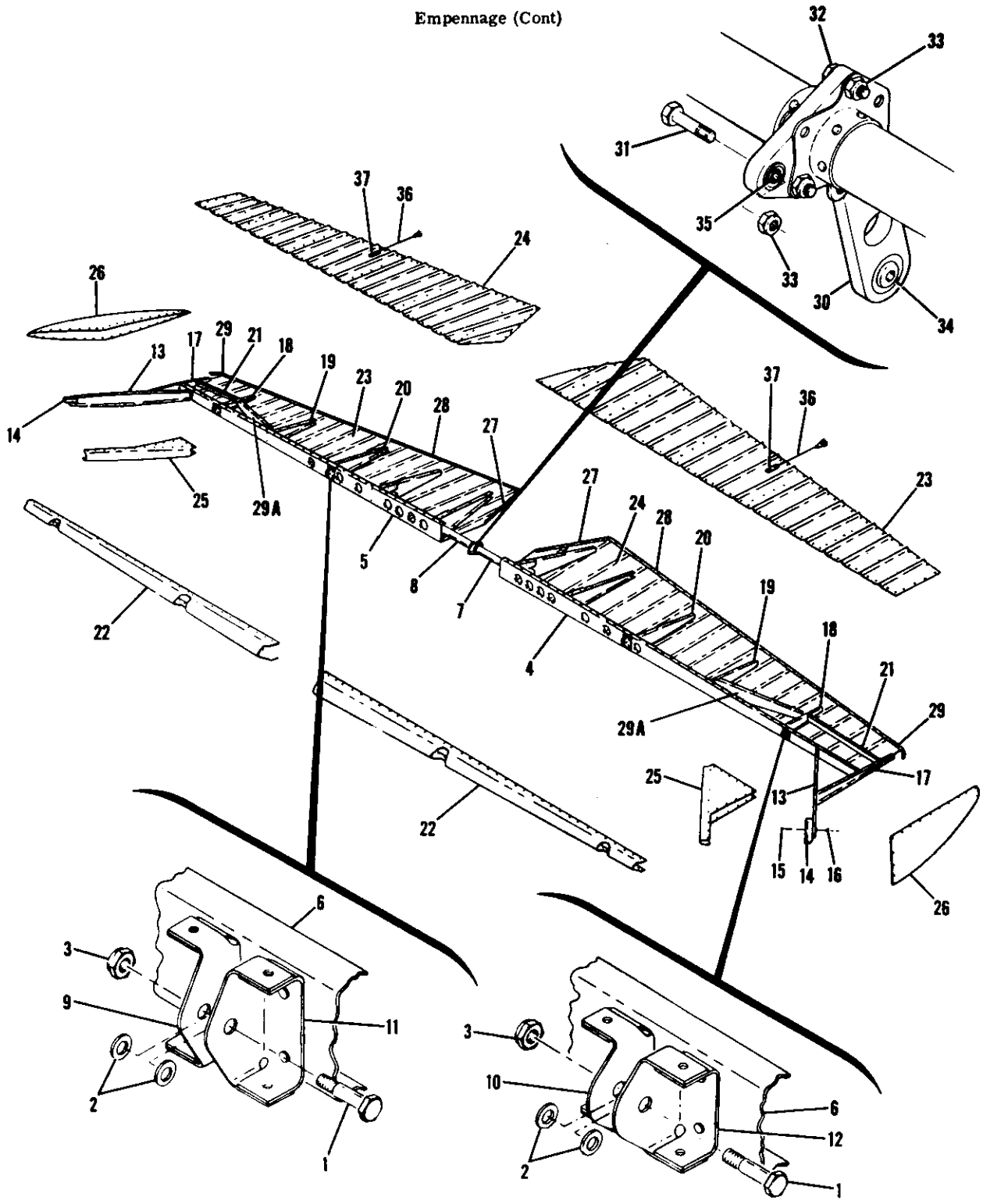

Figure 21. Elevator Installation

FIGURE AND INDEX NO.	PART NUMBER	DESCRIPTION 1 2 3 4 5 6 7	UNITS PER ASSY	USABLE ON CODE
21 -		ELEVATOR INSTALLATION	NP	
	0734600-1	ELEVATOR ASSEMBLY-LH	1	A
	0734600-21	ELEVATOR ASSEMBLY-LH WEU 0734600-33	1	B
	0734600-33	ELEVATOR ASSEMBLY-LH	1	B
	0734600-19	ELEVATOR ASSEMBLY-RH	1	A
	0734600-23	ELEVATOR ASSEMBLY-RH WEU 0734600-32	1	B
	0734600-32	ELEVATOR ASSEMBLY-RH	1	B
		ATTACHING PARTS		
- 1	AN4-11A	BOLT	2	
- 2	AN960-416L	WASHER	4	
- 3	NAS679A4	NUT	2	
		---*---		
- 4	0734601-1	SPAR ASSEMBLY-LH USED ON 0734600-1 & -21 ONLY	1	
	0734601-5	SPAR ASSEMBLY-LH USED ON 0734600-33 ONLY	1	
- 5	0734601-2	SPAR ASSEMBLY-RH USED ON 0734600-19 & -23 ONLY	1	
	0734601-4	SPAR ASSEMBLY-RH USED ON 0734600-32 ONLY	1	
- 6	0734601-3	SPAR-ELEVATOR	1	
- 7	0734110-1	TUBE ASSEMBLY-TORQUE LH	1	
- 8	0734110-2	TUBE ASSEMBLY-TORQUE RH	1	
- 9	0732100-4	HINGE-ELEVATOR INBOARD	1	
-10	0732100-11	HINGE-ELEVATOR OUTBOARD	1	
-11	0732100-10	HINGE-ELEVATOR INBOARD	1	
-12	0732100-3	HINGE-ELEVATOR OUTBOARD	1	
-13	0734604-1	RIB-ELEVATOR CANTED OUTBOARD	1	
-14	0733101-3	WEIGHT-ELEVATOR BALANCE	1	A
	0734610-2	WEIGHT-ELEVATOR BALANCE	1	B
		ATTACHING PARTS		
-15	AN509-10R29	SCREW	1	
-16	NAS686A3	NUTPLATE	1	
		---*---		
-17	0734602-1	RIB-ELEVATOR TIP	1	
-18	0734602-4	RIB-ELEVATOR USED ON 0734600-1,-19,-21,-23 ONLY	1	
	0734602-9	RIB-ELEVATOR USED ON 0734600-32 & -33 ONLY	1	
-19	0734602-3	RIB-ELEVATOR	1	
-20	0734602-2	RIB-ELEVATOR	1	
-21	0734605-1	STIFFENER	1	
-22	0734600-5	SKIN-ELEVATOR LEADING EDGE	1	
-23	0734600-4	SKIN-ELEVATOR	1	
-24	0734600-9	SKIN-ELEVATOR	1	
-25	0734600-7	SKIN-ELEVATOR OUTBOARD	1	
-26	0734608-1	TIP-ELEVATOR	1	A
	0734609-1	TIP-ELEVATOR	1	B
-27	0734600-8	SPACER	1	
-28	0734600-3	SPACER	1	
-29	0734606-1	SPACER	1	
-29A	0734611-1	STIFFENER-ELEVATOR	1	D
-30	1234029-1	PYLON ASSEMBLY-ELEVATOR	1	
		ATTACHING PARTS		
-31	AN4-11A	BOLT	1	
-32	AN4-7A	BOLT	3	
-33	NAS679A4	NUT	4	
		---*---		
-34	MS20200KP4	BEARING	1	
-35	4NCC910P	BEARING TOR	1	
-36	5169	STATIC DISCHARGER WHEN EXHAUSTED USE C592001-0101	2	C
	C592001-0101	STATIC DISCHARGER	2	E
		ATTACHING PARTS		
-37	AN515-8R8	SCREW	2	C
	AN515-6R8	SCREW	2	E
	NAS1329A08K75	RIVNUT	2	C
	NAS1329A06K75	RIVNUT	2	E
		---*---		

A---SERIAL 185-0001 THRU 185-0338
B---SERIAL 185-0339 THRU 18502310
SERIAL 18051184 THRU 18052384
C---SERIAL 185-0777 THRU 185-1335
SERIAL 18051446 THRU 18051906
D---SERIAL 185-0800 THRU 18502310
SERIAL 18051485 THRU 18052384
E---SERIAL 185-1336 THRU 18502310
SERIAL 18051907 THRU 18052384

Fuselage

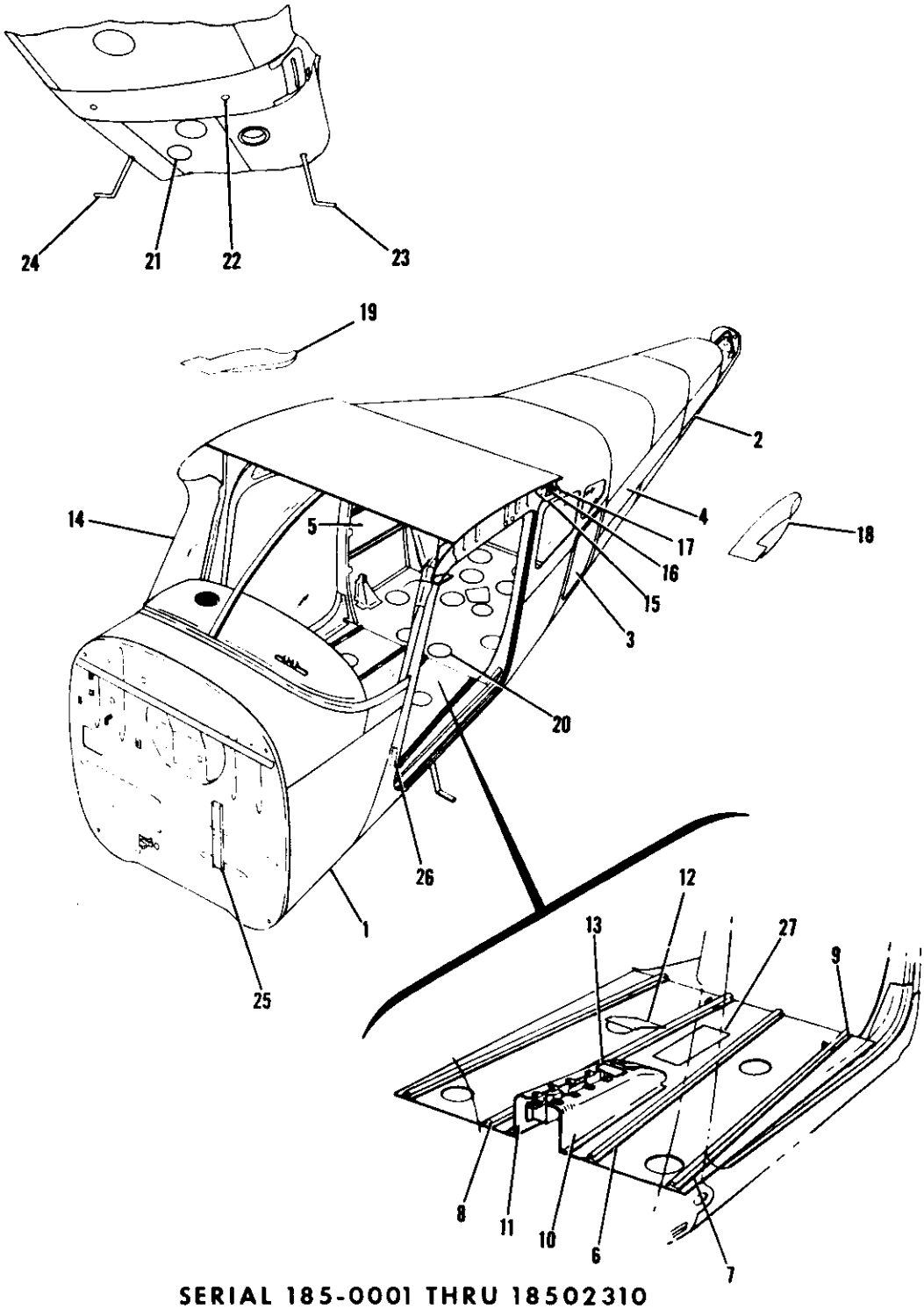

SERIAL 185-0001 THRU 18502310
SERIAL 18051313 THRU 18052384

Figure 22. Fuselage Assembly

FIGURE AND INDEX NO.	PART NUMBER	DESCRIPTION 1 2 3 4 5 6 7	UNITS PER ASSY	USABLE ON CODE
22 -		FUSELAGE ASSEMBLY	NP	A
		FUSELAGE ASSEMBLY	NP	C
- 1	SEE FIG 24	FRONT & CENTER SECTION ASSEMBLY-FUSELAGE	1	
- 2	SEE FIG 35 & 35A	AFT SECTION ASSEMBLY-FUSELAGE	1	
- 3	SEE FIG 52	DOOR INSTALLATION-BAGGAGE	NP	
- 4	0710003-18	PLATE-FUSELAGE SPLICE LH STA 108.00 TO 209.00	1	
- 5	0710003-16	PLATE-FUSELAGE SPLICE RH STA 65.33 TO 209.00	1	
- 6	0511000-68	RAIL-FRONT SEAT INBOARD LH & OUTBOARD RH	2	F
	0711693-1	RAIL-FRONT SEAT INBOARD LH & OUTBOARD RH	2	G
	0711693-5	RAIL-FRONT SEAT INBOARD LH & OUTBOARD RH	2	Q
- 7	0511000-69	RAIL-FRONT SEAT OUTBOARD LH	1	F
	0711693-3	RAIL-FRONT SEAT OUTBOARD LH	1	L
	0711693-4	RAIL-FRONT SEAT OUTBOARD LH	1	P
	0711693-6	RAIL-FRONT SEAT OUTBOARD LH	1	Q
- 8	0511000-70	RAIL-FRONT SEAT INBOARD RH	1	F
	0711693-2	RAIL-FRONT SEAT INBOARD RH	1	L
	0711693-4	RAIL-FRONT SEAT INBOARD RH	1	P
	0711693-6	RAIL-FRONT SEAT INBOARD RH	1	Q
		ATTACHING PARTS		
- 9	AN3-4A	BOLT	2	
	AN960-10	WASHER	2	
	MS21044N3	NUT	2	
		---*---		
-10	0510183-2	BULKHEAD-FUSELAGE TUNNEL AFT LH	1	D
	0510183-4	BULKHEAD-FUSELAGE TUNNEL AFT LH WEU 0510183-5	1	K
	0510183-5	BULKHEAD ASSEMBLY-FUSELAGE TUNNEL AFT LH	1	R
	0510183-9	BULKHEAD ASSEMBLY-FUSELAGE TUNNEL AFT LH	1	S
	NAS686A4	NUTPLATE SEAT BELT ATTACH	1	M
-11	0510183-3	BULKHEAD-FUSELAGE TUNNEL AFT RH	1	D
	0510183-1	BULKHEAD-FUSELAGE TUNNEL AFT RH WEU 0510183-6	1	K
	0510183-6	BULKHEAD ASSEMBLY-FUSELAGE TUNNEL AFT RH	1	R
	0510183-10	BULKHEAD ASSEMBLY-FUSELAGE TUNNEL AFT RH	1	S
	NAS686A4	NUTPLATE SEAT BELT ATTACH	1	M
	NAS395-16-3	NUT	10	
-12	0510129-4	PLATE-FUSELAGE TUNNEL AFT	1	D
	0510129-3	PLATE-FUSELAGE TUNNEL AFT	1	E
	0510129-5	PLATE-FUSELAGE TUNNEL AFT	1	S
		ATTACHING PARTS		
	NAS395-16-3	NUT	8	D
	S1021Z10-8	SCREW	8	D
		---*---		
-13	0716107-1	PLATE-FUEL VALVE	1	B
	0713947-1	CHANNEL-FUEL SHUT OFF	1	N
-14	SEE FIG 31	WINDSHIELD INSTALLATION	NP	
-15	0512146	PLATE-REINFORCEMENT LH	1	
	0512146-1	PLATE-REINFORCEMENT RH	1	
-16	0512149-1	BRACKET-FLAP PULLEY LH	1	
	0512149-2	BRACKET-FLAP PULLEY RH	1	
		ATTACHING PARTS		
-17	AN3-4A	BOLT	1	
	MS21044N3	NUT	1	
		---*---		
-18	0710109-1	FILLET-WING LH	1	
-19	0710109-2	FILLET-WING RH	1	
-20	S225-1	PLATE-INSPECTION OPENING COVER	13	
		ATTACHING PARTS		
	49330	STUD-TRIMOUNT UC	3	
		---*---		
-21	S225-1	PLATE-INSPECTION OPENING COVER	4	
		ATTACHING PARTS		
	S1021Z8-6	SCREW	3	
		---*---		
-22	CM2692-32-1S	PLUG BUTTON	2	
-23	0711006-1	STEP ASSEMBLY-LH	1	H
	0711710-5	STEP ASSEMBLY-LH	1	J
-24	0711006-2	STEP ASSEMBLY-RH	1	H
	0711710-6	STEP ASSEMBLY-RH	1	J
		ATTACHING PARTS		
	AN525-416R9	SCREW	1	
	NAS679A4	NUT	1	
		---*---		
	1510040-5	SAFETY STEP	1	J

CONTINUED ON NEXT PAGE

FIGURE AND INDEX NO.	PART NUMBER	DESCRIPTION 1 2 3 4 5 6 7	UNITS PER ASSY	USABLE ON CODE
22 -25	0713119-1	CHANNEL-PARKING BRAKE STIFFENER ----------	1	
-26		NAMEPLATE-M.A.A. ----------	NP	
-27	0311516-4	PLATE-COVER ----------	1	
		ATTACHING PARTS		
	49330	STUD UC ----------	8	
		---*---		
		A---SERIAL 185-0001 THRU 18502310		
		B---SERIAL 185-0001 THRU 185-0415		
		C---SERIAL 18051313 THRU 18052384		
		D---SERIAL 185-0001 THRU 185-0653		
		E---SERIAL 18051313 THRU 18052215		
		SERIAL 185-0654 THRU 18501943		
		F---SERIAL 185-0001 THRU 185-0806		
		SERIAL 18051313 THRU 18051490		
		G---SERIAL 185-0807 THRU 18501954		
		SERIAL 18051491 THRU 18052215		
		H---SERIAL 185-0001 THRU 185-1300		
		SERIAL 18051313 THRU 18051875		
		J---SERIAL 185-1301 THRU 18502310		
		SERIAL 18051876 THRU 18052384		
		K---SERIAL 185-0654 THRU 185-1599		
		SERIAL 18051313 THRU 18052103		
		L---SERIAL 185-0807 THRU 185-1599		
		SERIAL 18051491 THRU 18052103		
		M---SERIAL 18501600 THRU 18502310		
		SERIAL 18052104 THRU 18052384		
		N---SERIAL 18501680 THRU 18501943		
		P---SERIAL 18501600 THRU 18501954		
		SERIAL 18052104 THRU 18052215		
		Q---SERIAL 18501955 THRU 18502310		
		SERIAL 18052216 THRU 18052384		
		R---SERIAL 18501600 THRU 18501943		
		SERIAL 18052104 THRU 18052215		
		S---SERIAL 18501944 THRU 18502310		
		SERIAL 18052216 THRU 18052384		

Fuselage (Cont)

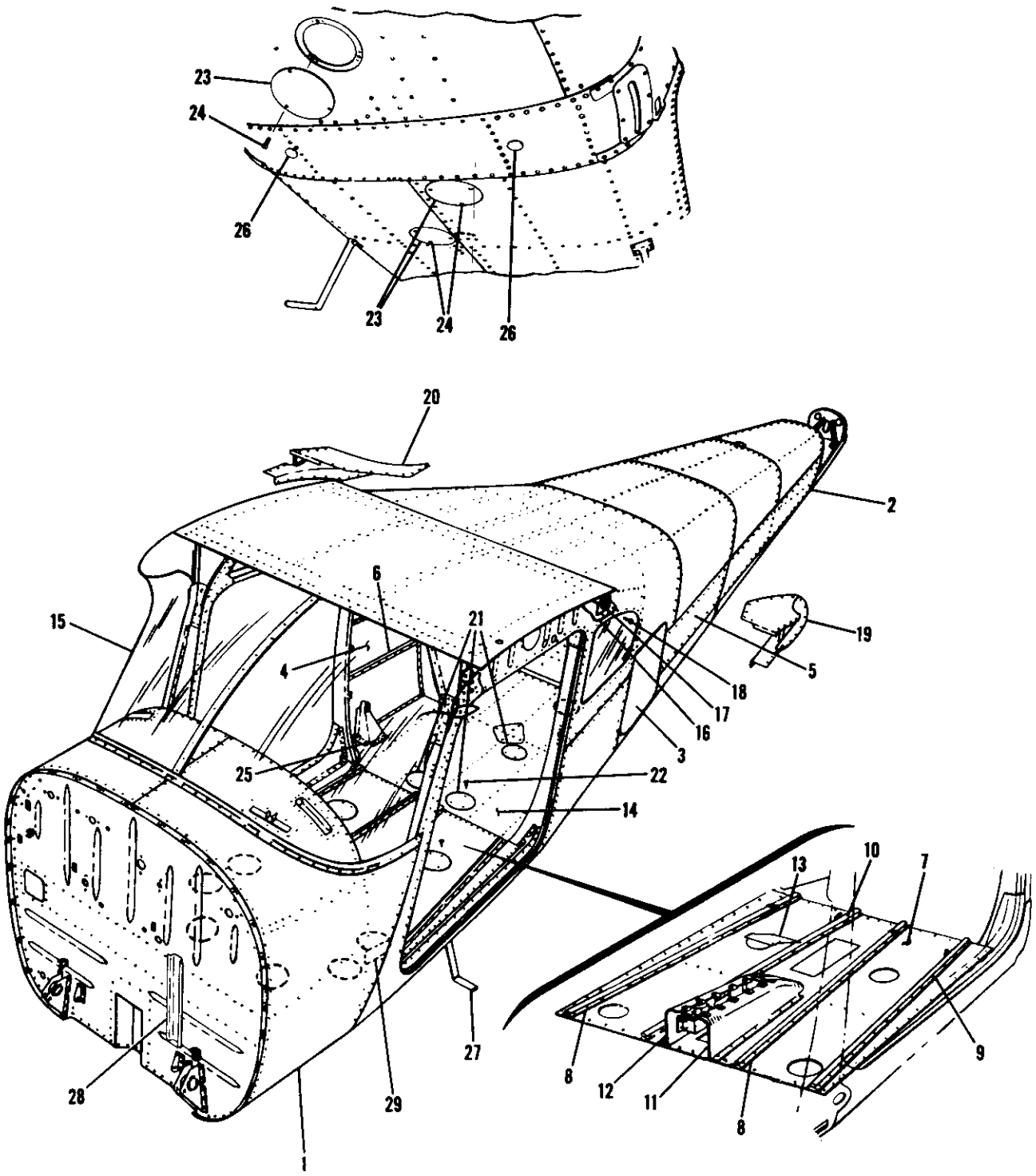

SERIAL 18051184 THRU 18051312

Figure 23. Fuselage Assembly

FIGURE AND INDEX NO.	PART NUMBER	DESCRIPTION 1 2 3 4 5 6 7	UNITS PER ASSY	USABLE ON CODE
23 -		FUSELAGE ASSEMBLY	NP	A
- 1	0791102-8	FRONT & CENTER SECTION-FUSELAGE SEE FIGURE 25	1	
- 2	0791200-8	AFT SECTION ASSEMBLY-FUSELAGE SEE FIGURE 35	1	
- 3	SEE FIG 52	DOOR INSTALLATION-BAGGAGE	1	
- 4	0710003-16	PLATE-FUSELAGE SPLICE RH STA 65.33 TO 209.00	1	
- 5	0710003-18	PLATE-FUSELAGE SPLICE LH STA 108.00 TO 140.00	1	
- 6	0511146	RETAINER-UPHOLSTERY	2	
- 7	0511000-41	FLOORBOARD-SHEET	1	
- 8	0511000-14	RAIL-FRONT SEAT INBOARD LH & OUTBOARD RH	2	
- 9	0511000-15	RAIL-FRONT SEAT OUTBOARD LH	1	
-10	0511000-64	RAIL-FRONT SEAT INBOARD RH	1	
-11	0510114-50	BULKHEAD ASSEMBLY-FUSELAGE TUNNEL AFT LH	1	
-12	0510114-51	BULKHEAD ASSEMBLY-FUSELAGE TUNNEL AFT RH	1	
-13	0510129-3	PLATE-FUSELAGE TUNNEL REAR	1	
-14	0512107-36	FLOORBOARD ASSEMBLY-FUSELAGE AFT	1	
-15	SEE FIG 31	WINDSHIELD INSTALLATION	1	
-16	0512146	PLATE-REINFORCEMENT LH	1	
	0512146-1	PLATE-REINFORCEMENT RH	1	
-17	0512149-1	BRACKET-FLAP PULLEY LH	1	
	0512149-2	BRACKET-FLAP PULLEY RH	1	
		ATTACHING PARTS		
-18	AN3-4A	BOLT	2	
	MS21044N3	NUT	2	
		---*---		
-19	0710109-1	FILLET-WING LH	1	
-20	0710109-2	FILLET-WING RH	1	
-21	S225-1	PLATE-INSPECTION OPENING COVER	3	
		ATTACHING PARTS		
-22	49330	STUD-TRIMOUNT UC	3	
		---*---		
-23	S225-1	PLATE-INSPECTION OPENING COVER	3	
		ATTACHING PARTS		
-24	S1021Z8-8	SCREW	3	
		---*---		
-25	0511312-1	BRACKET ASSEMBLY-REAR SEAT ATTACHMENT	2	
	NAS680A3	NUTPLATE	1	
-26	CM2692-32-15	PLUG BUTTON	2	
-27	0711006-1	STEP ASSEMBLY-LH	1	
	0711006-2	STEP ASSEMBLY-RH	1	
		ATTACHING PARTS		
	AN525-416R9	SCREW	2	
	NAS679A4	NUT	2	
		---*---		
-28	0713119-1	CHANNEL-PARKING BRAKE STIFFENER	1	
-29		NAMEPLATE-M.A.A.	NP	
		A---SERIAL 18051184 THRU 18051312		

Fuselage (Cont)

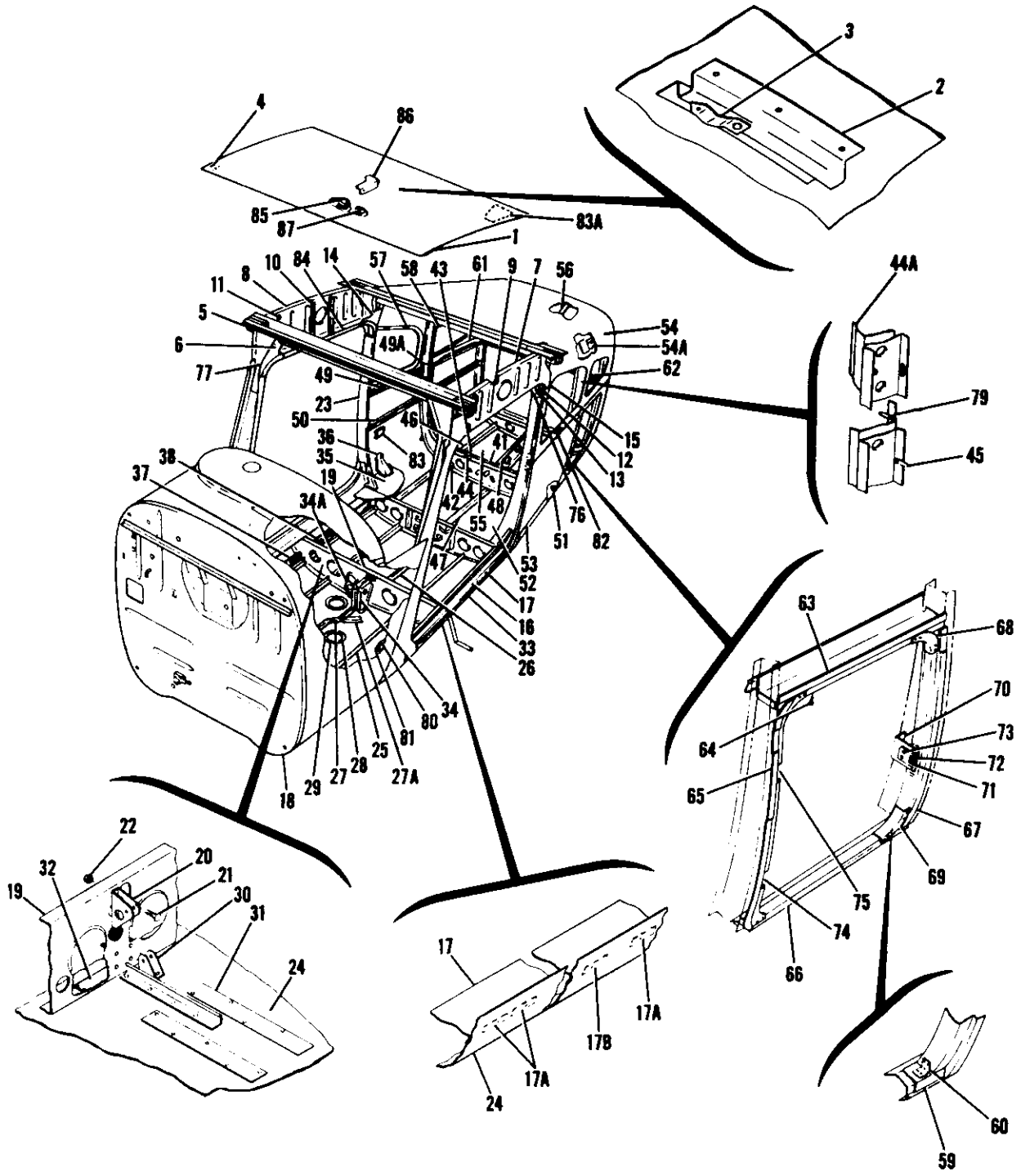

SERIAL 185-0001 THRU 18502310
SERIAL 18051313 THRU 18052384

Figure 24. Fuselage Front & Center Section

FIGURE AND INDEX NO.	PART NUMBER	DESCRIPTION 1 2 3 4 5 6 7	UNITS PER ASSY	USABLE ON CODE
24 -	0791102-10	FRONT & CENTER SECTION ASSEMBLY-FUSELAGE	1	E
	0791102-13	FRONT & CENTER SECTION ASSEMBLY-FUSELAGE	1	J
	0791102-14	FRONT & CENTER SECTION ASSEMBLY-FUSELAGE	1	S
	0791102-16	FRONT & CENTER SECTION ASSEMBLY-FUSELAGE	1	T
	0791102-20	FRONT & CENTER SECTION ASSEMBLY-FUSELAGE	1	X
	0791102-22	FRONT & CENTER SECTION ASSEMBLY-FUSELAGE	1	AD
		FRONT & CENTER SECTION ASSEMBLY-FUSELAGE	NP	AF
	0791102-12	FRONT & CENTER SECTION ASSEMBLY-FUSELAGE	1	H
	0791102-15	FRONT & CENTER SECTION ASSEMBLY-FUSELAGE	1	U
	0791102-17	FRONT & CENTER SECTION ASSEMBLY-FUSELAGE	1	V
	0791102-21	FRONT & CENTER SECTION ASSEMBLY-FUSELAGE	1	Y
	0791102-23	FRONT & CENTER SECTION ASSEMBLY-FUSELAGE	1	AE
		FRONT & CENTER SECTION ASSEMBLY-FUSELAGE	NP	AG
	1210020-200	TOP ASSEMBLY-CABIN	1	
- 1	1210020-4	CAP-FRONT SPAR	1	A
	1210020-8	CAP-FRONT SPAR	1	B
- 2	0411718-5	STIFFENER ASSEMBLY-SKIN	2	
- 3	0411680	HANGER-HEADLINER	1	
- 4	S1860-2A	NUTPLATE	4	A
	NAS680A08	NUTPLATE	4	B
- 5	0511000-63	RETAINER-WINDSHIELD SEE FIGURE 31	1	
- 6	NAS680A3	NUTPLATE	2	
- 7	0511000-43	RIB-FUSELAGE FRONT & CENTER SECTION LH	1	
- 8	0511000-44	RIB-FUSELAGE FRONT & CENTER SECTION RH	1	
- 9	1210030-1	STIFFENER LH	2	
-10	1210030-2	STIFFENER RH	2	
-11	MS35489-16	GROMMET	2	
-12	0511000-6	FRAME-DOOR UPPER OUTBOARD LH	1	
	0511000-7	FRAME-DOOR UPPER OUTBOARD RH	1	
-13	0511000-22	FRAME-DOOR UPPER INBOARD LH	1	
	0511000-23	FRAME-DOOR UPPER INBOARD RH	1	
-14	0511000-8	GUSSET PLATE-REAR UPPER DOOR JAMB LH	1	AH
	0511000-9	GUSSET PLATE-REAR UPPER DOOR JAMB RH	1	AH
	0511000-73	GUSSET PLATE ASSEMBLY-REAR UPPER DOOR JAMB LH	1	AJ
	0511000-74	GUSSET PLATE ASSEMBLY-REAR UPPER DOOR JAMB RH	1	AJ
		ATTACHING PARTS		
	AN525-832R9	SCREW	7	AJ
	AN960-8L	WASHER UNDER NUT	7	AJ
	MS21044N08	NUT	7	AJ
		---*---		
	NAS680A4	NUTPLATE SHOULDER HARNESS ATTACH	1	AJ
-15	0511150	BRACKET-LH	1	
	0511150-1	BRACKET-RH	1	
-16	0511116-8	SILL ASSEMBLY-DOOR LOWER LH	1	
	0511116-9	SILL ASSEMBLY-DOOR LOWER RH	1	
-17	0511000-36	SUPPORT-DOOR SILL LOWER LH	1	
	0511000-37	SUPPORT-DOOR SILL LOWER RH	1	
-17A	0710003-41	STRAP RETAINER ASSEMBLY-LH	3	Z
	0710003-40	STRAP RETAINER ASSEMBLY-RH	3	Z
-17B	0710003-40	STRAP RETAINER ASSEMBLY-LH	1	Z
	0710003-41	STRAP RETAINER ASSEMBLY-RH	1	Z
-18	SEE FIG 28	STRUCTURE ASSEMBLY-FUSELAGE FRONT SECTION	1	
-19	0511290-5	BULKHEAD ASSEMBLY STA 44.00 WEU 0511290-6	1	K
	0511290-6	BULKHEAD ASSEMBLY STA 44.00	1	L
	0710656-1	SUPPORT ASSEMBLY-SEAT BELT FITTING OUTBD LH	1	L
	0710656-2	SUPPORT ASSEMBLY-SEAT BELT FITTING OUTBD RH	1	L
-20	0411447	BRACKET-ELEVATOR PULLEY	1	
		ATTACHING PARTS		
-21	AN520-10P7	BOLT	1	
-22	MS21044N3	NUT	1	
		---*---		
-23	0512124-41	BULKHEAD ASSEMBLY-FUSELAGE STA 65.33 SEE FIGURE 32 --	1	Q
	0512124-52	BULKHEAD ASSEMBLY-FUSELAGE STA 65.33 SEE FIGURE 32A -	1	R
	0512124-73	BULKHEAD ASSEMBLY-FUSELAGE STA 65.33 SEE FIGURE 32A -	1	AJ

CONTINUED ON NEXT PAGE

FIGURE AND INDEX NO.	PART NUMBER	DESCRIPTION 1 2 3 4 5 6 7	UNITS PER ASSY	USABLE ON CODE
24 -24	0791102-9	SKIN ASSEMBLY-CENTER SECTION LOWER STA 27.812 TO 65.33 --	1	
-25	0710006-1	STRINGER-CENTER SECTION LH	1	
	0710006-2	STRINGER-CENTER SECTION RH	1	
-26	0710006-4	STRINGER-CENTER SECTION	1	
-27	0511000-35	STRINGER-CENTER SECTION	1	
-27A	0710003-19	ANGLE	1	
-28	S226-3	DOUBLER	2	
-29	NAS395-14-3	NUT	6	
-30	0510174	BRACKET	1	
-31	0511000-60	RUB STRIP	2	
-32	0710034-1	RUB STRIP	1	
-33	0710003-3	DOUBLER-LOWER SKIN LH	1	
	0710003-4	DOUBLER-LOWER SKIN RH	1	
-34	0711003	BRACKET ASSEMBLY-IDLER SPORCKET	1	
-34A	0716101	BRACKET-FUEL SELECTOR	1	M
-35	SEE FIG 27	FLOORBOARD INSTALLATION-FUSELAGE CENTER SECTION	1	
-36	0511312-1	BRACKET ASSEMBLY-REAP SEAT ATTACHMENT	2	
	NAS686A4	NUTPLATE	1	
-37	0710005-1	STIFFENER	2	
-38	0710005-2	STIFFENER	2	
-39		DELETED, NOT AVAILABLE		
-40		DELETED, NOT AVAILABLE		
	0711112-9	BULKHEAD ASSEMBLY-FUSELAGE STA 90.00 WEU 0711112-10	1	AH
	0711112-10	BULKHEAD ASSEMBLY-FUSELAGE STA 90.00	1	AJ
-41	0711112-8	BULKHEAD-FUSELAGE WEU 0711112-14	1	AH
	0711112-14	BULKHEAD-FUSELAGE	1	AJ
-42	0512113-7	ANGLE	1	
-43	0742111-1	REINFORCEMENT-BULKHEAD WEU 0742111-2	1	AH
	0742111-2	REINFORCEMENT-BULKHEAD	1	AJ
-44	0711801-2	DOUBLER ASSEMBLY-CARGO TIE DOWN	2	Z
-44A	0711112-3	RETAINER-WINDOW	1	AH
	0711112-12	RETAINER-WINDOW	1	AJ
-45	0511176	CLIP-UPHOLSTERY RETAINING	6	
	NAS697A3	NUT-ANCHOR	1	
	NAS697A4	NUT-ANCHOR	1	
	NAS395-5-3	NUT	4	
	0710008-3	ANGLE ASSEMBLY-SEAT BELT ATTACH	1	AJ
	NAS696A4	NUTPLATE	2	AJ
	0716128-45	DOUBLER TACTAIR INSTALLATION ONLY	1	
-46	0710003-6	STRINGER-FUSELAGE LOWER RH	1	
	0710003-5	STRINGER-FUSELAGE LOWER LH	1	
-47	0710003-12	STRINGER-FUSELAGE LOWER	1	
-48	0710007-1	BULKHEAD ASSEMBLY-LOWER STA 90.00 TO 108.00	1	AH
	0710007-3	BULKHEAD-LOWER STA 90.00 TO 108.00	1	AJ
-49	0711091-5	BULKHEAD-FUSELAGE UPPER LH STA 65.33 TO 90.00	1	
	0711091-6	BULKHEAD-FUSELAGE UPPER RH STA 65.33 TO 90.00	1	
-49A	0712518-2	BRACKET-SHOULDER HARNESS STOWAGE RH	1	AJ
	0712518-1	BRACKET-SHOULDER HARNESS STOWAGE LH	1	AJ
-50	0711091-3	BULKHEAD-FUSELAGE LOWER LH STA 65.33 TO 90.00	1	
	0711091-4	BULKHEAD-FUSELAGE LOWER RH STA 65.33 TO 90.00	1	
-51	0711084-15	PLATE ASSEMBLY-CENTER SEAT BELT ATTACHMENT LH	1	
	0711084-16	PLATE ASSEMBLY-CENTER SEAT BELT ATTACHMENT RH	1	
-52	0710003-10	SKIN-FUSELAGE LOWER STA 65.33 TO 90.00	1	
-53	0710003-7	DOUBLER-LOWER SKIN LH	1	
	0710003-8	DOUBLER-LOWER SKIN RH	1	
	NAS680A3	NUTPLATE	2	
-54	0791101-12	SKIN ASSEMBLY-REAR CABIN TOP SEE FIG 26	1	AH
	0791101-17	SKIN ASSEMBLY-REAR CABIN TOP SEE FIG 26	1	AJ
-54A	0712763-1	SUPPORT ASSEMBLY-SHOULDER HARNESS ATTACH LH	1	AJ
	0712763-2	SUPPORT ASSEMBLY-SHOULDER HARNESS ATTACH RH	1	AJ
	NAS687A4	NUTPLATE	1	AJ
-55	0710003-9	SKIN-FUSELAGE LOWER STA 90.00 TO 108.00	1	
-56	0511232-4	STRAP-SHOULDER HARNESS REINFORCEMENT	2	AH
-57	0511133	BRACKET-UPHOLSTERY	4	
-58	0711116-1	BRACKET-UPHOLSTERY	2	
-59	0710004-3	REINFORCEMENT WEU 0711786-1	1	AB
	0711786-1	REINFORCEMENT	1	AC
-60	0711101-17	CLIP	2	
-61	0711054-2	BULKHEAD-BAGGAGE SHELF	1	

CONTINUED ON NEXT PAGE

FIGURE AND INDEX NO.	PART NUMBER	DESCRIPTION 1 2 3 4 5 6 7	UNITS PER ASSY	USABLE ON CODE
24 -62	0710031-1	SUPPORT-BAGGAGE SHELF WHEN EXHAUSTED USE 0710031-4 ------	1	
	0710031-4	SUPPORT-BAGGAGE SHELF ----------	1	
-63	0711053-1	JAMB ASSEMBLY-BAGGAGE DOOR UPPER ----------	1	
	NAS680A08	NUTPLATE ----------	1	
-64	S1021Z8-8	SCREW ----------	1	
-65	0711101-4	JAMB-BAGGAGE DOOR FORWARD ----------	1	AB
-66	0711101-8	JAMB-BAGGAGE DOOR LOWER WEU 0711101-42 ----------	1	AC
	0711101-42	JAMB-BAGGAGE DOOR LOWER ----------	1	
-67	0711101-6	JAMB-BAGGAGE DOOR AFT ----------	1	
-68	0711101-15	GUSSET-BAGGAGE DOOR AFT UPPER ----------	1	AB
-69	0711101-16	GUSSET-BAGGAGE DOOR AFT LOWER WEU 0711101-43 ----------	1	AC
	0711101-43	GUSSET-BAGGAGE DOOR AFT LOWER ----------	1	
-70	0711101-7	REINFORCEMENT-BAGGAGE DOOR LATCH ----------	1	
-71	0311319-1	PLATE-BAGGAGE DOOR STRIKER ----------	1	
-72	0311319-2	SHIM-STRIKER PLATE ----------		
		ATTACHING PARTS		
-73	AN515-8R8	SCREW ----------	2	
		---*---		
-74	0711101-10	BRACKET-BAGGAGE DOOR LOWER HINGE ----------	1	
-75	0711101-11	BRACKET-BAGGAGE DOOR UPPER HINGE ----------	1	
-76	CR163-4-10	RIVET CY ----------	8	
-77	0700105-423	GUSSET-UPHOLSTERY RETAINER FWD LH ----------	1	F
	0700105-424	GUSSET-UPHOLSTERY RETAINER FWD RH ----------	1	F
-78		DELETED, NOT AVAILABLE ----------		
-79	0413181-2	CLIP-UPHOLSTERY RETAINING ----------	2	
-80	0713165-1	ADAPTER-ROTATING BEACON ----------	1	G
		ATTACHING PARTS		
-81	NAS697A06	NUTPLATE ----------	5	G
	AN515-6R8	SCREW ----------	5	G
		---*---		
-82	0711090-1	PLATE-ASH RECEIVER REINFORCEMENT LH ----------	1	
	0711090-2	PLATE-ASH RECEIVER REINFORCEMENT RH ----------	1	
	0711129-5	STIFFENER-SEAT BACK CATCH ----------	2	W
-83	0711129-1	BRACKET ----------	2	W
-83A	1210032-9	VIBRATION DAMPENER LH ----------	1	N
	1210032-8	VIBRATION DAMPENER RH ----------	1	N
-84	0711131-3	RETAINER ASSEMBLY-UPHOLSTERY LH ----------	1	
	0711131-4	RETAINER ASSEMBLY-UPHOLSTERY RH ----------	1	
-85	0710104-1	BRACKET ASSEMBLY-LIGHT CONSOLE ----------	1	C
	0511484-1	BRACKET ASSEMBLY-LIGHT CONSOLE ----------	1	D
	NAS395-6-3	NUT ----------	3	C
-86	0511483-1	BRACKET ASSEMBLY-LIGHT CONSOLE ----------	1	D
-87	0511296-1	ANGLE-LH-SPEAKER ----------	1	C
	0511296-2	ANGLE-RH-SPEAKER ----------	1	C
	0511485-1	BRACKET-SPEAKER ----------	2	P

A---SERIAL 185-0001 THRU 185-1565
SERIAL 18051313 THRU 18052084
B---SERIAL 185-1566 THRU 18502310
SERIAL 18052085 THRU 18052384
C---SERIAL 185-0001 THRU 185-0512
D---SERIAL 185-0513 THRU 18502310
SERIAL 18051313 THRU 18052384
E---SERIAL 185-0001 THRU 185-0653
F---SERIAL 185-0001 THRU 185-0420
G---SERIAL 185-0001 THRU 185-0540
H---SERIAL 18051313 THRU 18051445
J---SERIAL 185-0654 THRU 185-0776
K---SERIAL 185-0001 THRU 18501934
SERIAL 18051313 THRU 18052221
L---SERIAL 18501935 THRU 18502310
SERIAL 18052222 THRU 18052384
M---SERIAL 18051313 THRU 18052384
N---SERIAL 18051446 THRU 18052384
SERIAL 185-0777 THRU 18502310
P---SERIAL 185-0513 THRU 185-0776
SERIAL 18051313 THRU 18051445
Q---SERIAL 185-0001 THRU 185-0967
SERIAL 18051313 THRU 18051607

CONTINUED ON NEXT PAGE

FIGURE AND INDEX NO.	PART NUMBER	DESCRIPTION 1 2 3 4 5 6 7	UNITS PER ASSY	USABLE ON CODE
24 -		R---SERIAL 185-0968 THRU 18501832		
		SERIAL 18051608 THRU 18052175		
		S---SERIAL 185-0777 THRU 185-0967		
		T---SERIAL 185-0968 THRU 185-1300		
		U---SERIAL 18051446 THRU 18051607		
		V---SERIAL 18051608 THRU 18051875		
		W---SERIAL 185-0001 THRU 185-1149		
		SERIAL 18051313 THRU 18051774		
		X---SERIAL 185-1301 THRU 185-1599		
		Y---SERIAL 18051876 THRU 18052103		
		Z---SERIAL 18502091 THRU 18502310		
		SERIAL 18052285 THRU 18052384		
		AA---SERIAL 18052104 THRU 18052384		
		AB---SERIAL 185-0001 THRU 18501667		
		SERIAL 18051313 THRU 18052134		
		AC---SERIAL 18501668 THRU 18502310		
		SERIAL 18052135 THRU 18052384		
		AD---SERIAL 18501600 THRU 18501832		
		AE---SERIAL 18052104 THRU 18052175		
		AF---SERIAL 18501833 THRU 18502310		
		AG---SERIAL 18052176 THRU 18052384		
		AH---SERIAL 185-0001 THRU 18501832		
		SERIAL 18051313 THRU 18052175		
		AJ---SERIAL 18501833 THRU 18502310		
		SERIAL 18052176 THRU 18052384		

FIGURE AND INDEX NO.	PART NUMBER	DESCRIPTION 1 2 3 4 5 6 7	UNITS PER ASSY	USABLE ON CODE
25 -	0791102-11	FRONT & CENTER SECTION ASSEMBLY-FUSELAGE	1	A
- 1	1210020-200	TOP ASSEMBLY-CABIN	1	
- 2	NAS444-14	NUT	4	
- 3	0511000-63	RETAINER-WINDSHIELD SEE FIGURE 31	1	
- 4	0511000-43	RIB-FUSELAGE FRONT & CENTER SECTION LH	1	
- 5	0511000-44	RIB-FUSELAGE FRONT & CENTER SECTION RH	1	
- 6	0511000-6	FRAME-DOOR UPPER OUTBOARD LH	1	
	0511000-7	FRAME-DOOR UPPER OUTBOARD RH	1	
- 7	0511000-22	FRAME-DOOR UPPER INBOARD LH	1	
	0511000-23	FRAME-DOOR UPPER INBOARD RH	1	
- 8	0511000-9	GUSSET PLATE-REAR UPPER DOOR JAMB RH	1	
	0511000-8	GUSSET PLATE-REAR UPPER DOOR JAMB LH	1	
	0511150	BRACKET	1	
	0511150-1	BRACKET	1	
- 9	0511116	SILL ASSEMBLY-DOOR LOWER LH	1	
-10	0511116-1	SILL ASSEMBLY-DOOR LOWER RH	1	
-11	0511000-36	SUPPORT-LOWER DOOR SILL LH	1	
	0511000-37	SUPPORT-LOWER DOOR SILL RH	1	
-12	0511290-3	BULKHEAD ASSEMBLY STA 44.00	1	
-13	0411447	BRACKET-ELEVATOR PULLEY		
		ATTACHING PARTS	1	
-14	AN520-10R7	BOLT	1	
-15	MS21044N3	NUT		
		---+---		
		CONTINUED ON NEXT PAGE		

Fuselage (Cont)

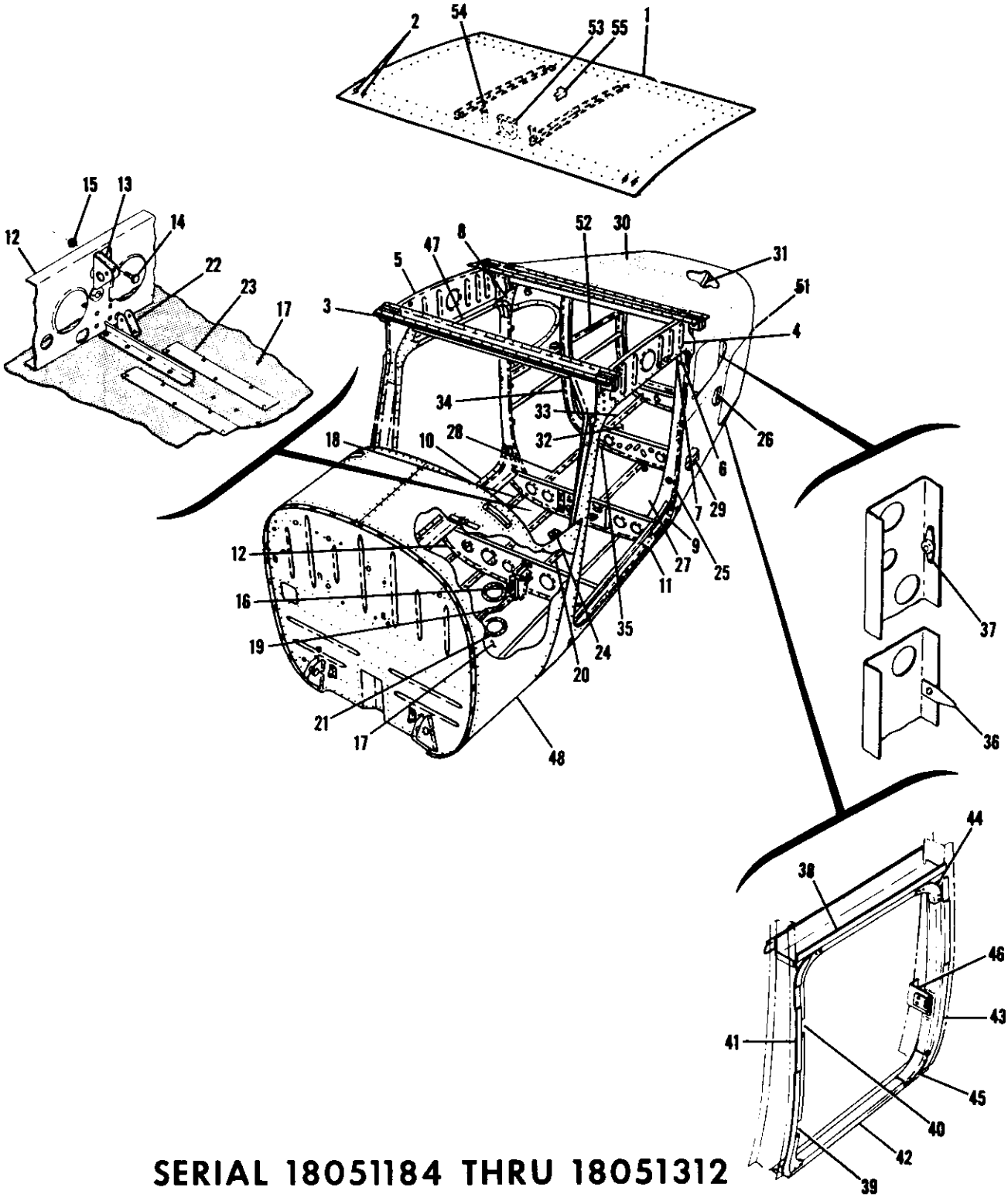

SERIAL 18051184 THRU 18051312

Figure 25. Fuselage Front & Center Section

FIGURE AND INDEX NO.	PART NUMBER	DESCRIPTION 1 2 3 4 5 6 7	UNITS PER ASSY	USABLE ON CODE
25 -16	0711003	BRACKET ASSEMBLY-IDLER SPROCKET	1	
	NAS680A3	NUT	1	
-17	0791100-3	SKIN ASSEMBLY-FUSELAGE CENTER SECTION LOWER STA 27.812 TO 65.33	1	
-18	0511000-11	STRINGER-FUSELAGE CENTER SECTION	4	
-19	0511000-35	STRINGER-FUSELAGE CENTER	1	
-20	0511000-38	STRINGER-FUSELAGE CENTER SECTION	1	
-21	S226-3	DOUBLER-INSPECTION OPENING	2	
	NAS395-14-3	NUT	3	
-22	0510174	BRACKET-TAB PULLEY	1	
-23	0511000-60	RUB STRIP	2	
	S349	GROMMET-DRAIN	2	
-24	0716101	BRACKET-FUEL SELECTOR VALVE	1	
-25	0791102-4	BULKHEAD ASSEMBLY-FUSELAGE STA 65.33 SEE FIGURE 32	1	
-26	0413181-2	CLIP-UPHOLSTERY RETAINING	2	
-27	0791102-2	SKIN ASSEMBLY-FUSELAGE LOWER STA 65.33 TO 90.00	1	
-28	0512000-20	STRINGER-FUSELAGE LOWER	3	
-29	0710025-2	STRINGER-FUSELAGE LH ONLY	1	
-30	0791102-3	SKIN ASSEMBLY-REAR CABIN TOP STA 65.33 TO 108.00 SEE FIGURE 26	1	
-31	0511232-4	STRAP-SHOULDER HARNESS REINFORCEMENT	2	
-32	0710020-14	SKIN-FUSELAGE LOWER STA 90.00 TO 108.00	1	
-33	0710025-1	STIFFENER-SKIN LOWER	2	
-34	0791102-6	BULKHEAD ASSEMBLY-FUSELAGE STA 90.00	1	
-35	0512113-7	ANGLE-REINFORCEMENT	1	
-36	0511176	CLIP-UPHOLSTERY RETAINING	4	
-37	NAS697A3	NUT-ANCHOR	1	
	NAS697A4	NUT-ANCHOR	1	
	NAS395-5-3	NUT	4	
-38	0711101-32	JAMB ASSEMBLY-BAGGAGE DOOR UPPER	1	
	NAS680A08	NUTPLATE	1	
	MS20366F1032	NUTPLATE	2	
-39	0711101-10	BRACKET-BAGGAGE DOOR LOWER HINGE	1	
-40	0711101-11	BRACKET-BAGGAGE DOOR UPPER HINGE	1	
-41	0711101-4	JAMB-BAGGAGE DOOR FORWARD	1	
-42	0711101-8	JAMB-BAGGAGE DOOR LOWER	1	
-43	0711101-6	JAMB-BAGGAGE DOOR AFT	1	
-44	0711101-15	GUSSET-BAGGAGE DOOR AFT UPPER	1	
-45	0711101-16	GUSSET-BAGGAGE DOOR AFT LOWER WEU 0711101-43	1	
-46	0711101-7	REINFORCEMENT-BAGGAGE DOOR LATCH	1	
-47	0711131-3	RETAINER ASSEMBLY-HEADLINER LH	1	
	0711131-4	RETAINER ASSEMBLY-HEADLINER RH	1	
-48	0791302-8	STRUCTURE ASSEMBLY-FUSELAGE FRONT SECTION SEE FIG 29	1	
-49		DELETED, NOT AVAILABLE		
	0711101-17	CLIP	2	
-50		DELETED, NOT AVAILABLE		
-51	0511145	SUPPORT-BAGGAGE SHELF	1	
-52	0511146	RETAINER	1	
-53	0511484-1	BRACKET ASSEMBLY-LIGHT CONSOLE	2	
-54	0511485-1	ANGLE-SPEAKER	1	
-55	0511483-1	BRACKET ASSEMBLY-LIGHT CONSOLE		
		A---SERIAL 18051184 THRU 18051312		

Fuselage (Cont)

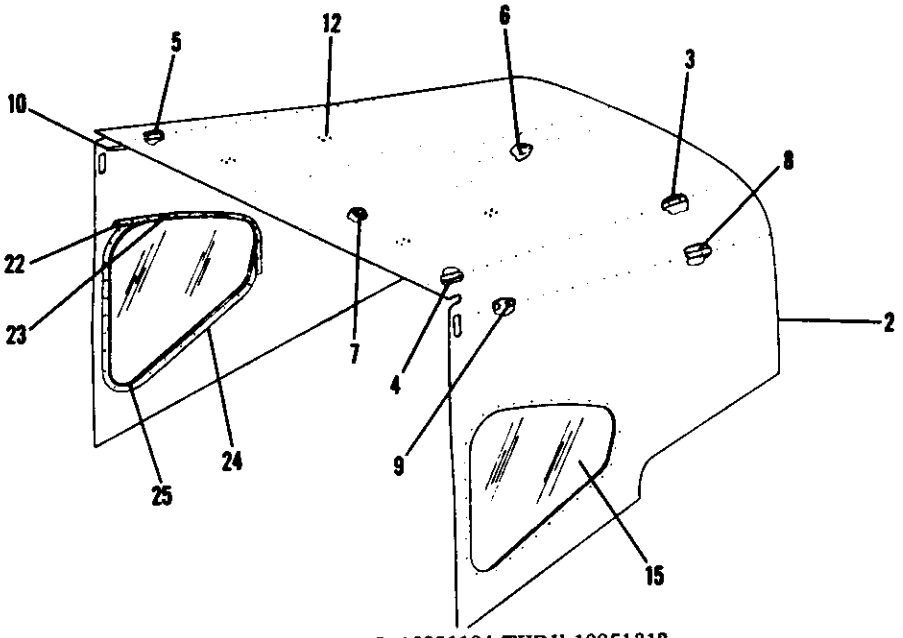

MODEL 180 SERIAL 18051184 THRU 18051312

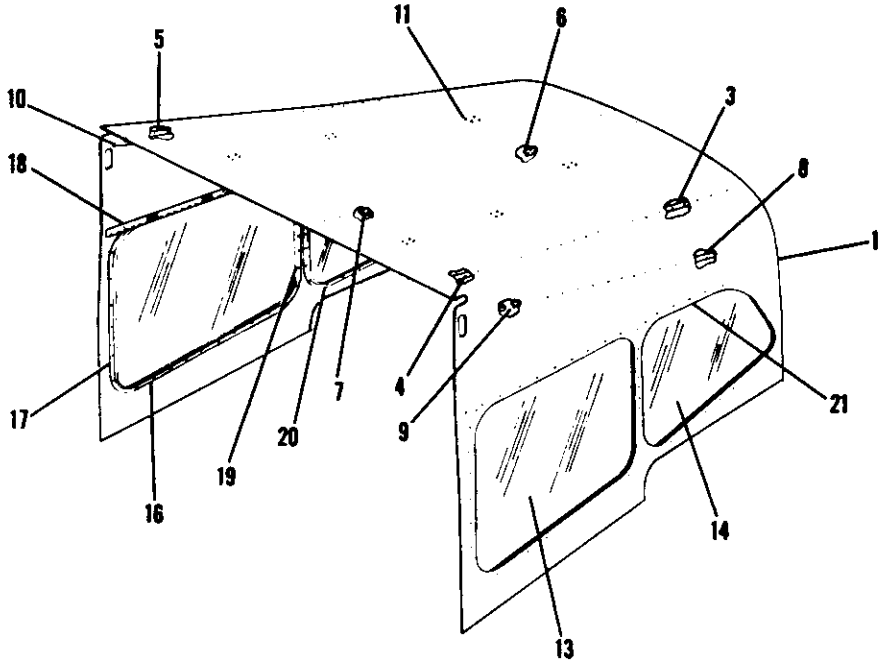

MODEL 185 SERIAL 185-0001 & ON
MODEL 180 SERIAL 18051313 & ON

Figure 26. Rear Cabin Top Skin Assembly

FIGURE AND INDEX NO.	PART NUMBER	DESCRIPTION 1 2 3 4 5 6 7	UNITS PER ASSY	USABLE ON CODE
26 -	0791101-7	SKIN ASSEMBLY-REAR CABIN TOP STA 65.33 TO 108.00	1	B
	0791101-15	SKIN ASSEMBLY-REAR CABIN TOP STA 65.33 TO 108.00	1	D
	0791101-18	SKIN ASSEMBLY-REAR CABIN TOP STA 65.33 TO 108.00	1	G
	0791101-16	SKIN ASSEMBLY-REAR CABIN TOP STA 65.33 TO 108.00	1	E
		WITH TINTED WINDOWS		
	0791101-19	SKIN ASSEMBLY-REAR CABIN TOP STA 65.33 TO 108.00	1	G
		WITH TINTED WINDOWS		
- 1	0791101-12	SKIN ASSEMBLY-REAR CABIN TOP LESS WINDOWS	1	D
	0791101-17	SKIN ASSEMBLY-REAR CABIN TOP LESS WINDOWS	1	G
- 2	0791102-3	SKIN ASSEMBLY-REAR CABIN TOP LESS WINDOWS	1	B
- 3	0711114-1	STRINGER-LH	1	
	0711114-2	STRINGER-RH	1	
- 4	0711113-1	STRINGER-LH	1	
- 5	0711113-2	STRINGER-RH	1	
- 6	0711115-1	STRINGER-LH	1	
	0711115-2	STRINGER-RH	1	
- 7	0711118-1	STIFFENER ASSEMBLY	2	
	0411680	HANGER	2	
- 8	0710024-1	STRINGER-LH	1	F
	0710024-3	STRINGER-LH	1	G
	0710024-2	STRINGER-RH	1	F
	0710024-1	STRINGER-RH	1	G
- 9	0710023-1	ANGLE-LH	1	
-10	0710023-2	ANGLE-RH	1	
-11	0512000-66	BRACKET ASSEMBLY	6	A
	0411680	HANGER	1	
-12	0512000-66	BRACKET ASSEMBLY	4	B
	0411680	HANGER	1	
-13	0700112-1	WINDOW-SIDE CLEAR	2	A
	0700112-2	WINDOW-SIDE TINTED	2	C
-14	0700111-1	WINDOW-AFT CLEAR	2	A
	0700111-2	WINDOW-AFT TINTED	2	C
-15	0710108-3	WINDOW-REAR	2	B
-16	0710026-2	RETAINER-SIDE WINDOW LOWER RH	1	A
	0710026-1	RETAINER-SIDE WINDOW LOWER LH	1	A
-17	0710113-6	RETAINER-SIDE WINDOW UPHOLSTERY RH	1	A
	0710113-5	RETAINER-SIDE WINDOW UPHOLSTERY LH	1	A
-18	0710026-4	RETAINER-SIDE WINDOW UPPER RH	1	A
	0710026-3	RETAINER-SIDE WINDOW UPPER LH	1	A
	0710113-4	RETAINER-SIDE WINDOW UPHOLSTERY UPPER RH	1	A
	0710113-3	RETAINER-SIDE WINDOW UPHOLSTERY UPPER LH	1	A
-19	0710026-6	RETAINER-SIDE WINDOW AFT RH	1	A
	0710026-5	RETAINER-SIDE WINDOW AFT LH	1	A
-20	0710110-2	RETAINER-REAR WINDOW RH	1	A
	0710110-1	RETAINER-REAR WINDOW LH	1	A
	0710112-2	RETAINER-REAR WINDOW UPHOLSTERY LOWER RH	1	A
	0710112-1	RETAINER-REAR WINDOW UPHOLSTERY LOWER LH	1	A
-21	0710111-1	RETAINER-REAR WINDOW UPHOLSTERY UPPER LH	1	A
	0710111-2	RETAINER-REAR WINDOW UPHOLSTERY UPPER RH	1	B
-22	0710105-4	RETAINER-UPHOLSTERY RH	1	B
	0710105-3	RETAINER-UPHOLSTERY LH	4	B
-23	0511133	BRACKET	1	B
-24	0710106-4	FAIRING-WINDOW LOWER RH	1	B
	0710106-3	FAIRING-WINDOW LOWER LH	1	B
-25	0710107-4	RETAINER-WINDOW RH	1	B
	0710107-3	RETAINER-WINDOW LH		

A---SERIAL 185-0001 THRU 18502310
SERIAL 18051313 THRU 18052384
B---SERIAL 18051184 THRU 18051312
C---SERIAL 185-1150 THRU 18502310
SERIAL 18051775 THRU 18052384
D---SERIAL 185-0001 THRU 18501832
SERIAL 18051313 THRU 18052175
E---SERIAL 185-1150 THRU 18501832
SERIAL 18051775 THRU 18052175
F---SERIAL 185-0001 THRU 18501832
SERIAL 18051184 THRU 18052175
G---SERIAL 18501833 THRU 18502310
SERIAL 18052176 THRU 18052384

Fuselage (Cont)

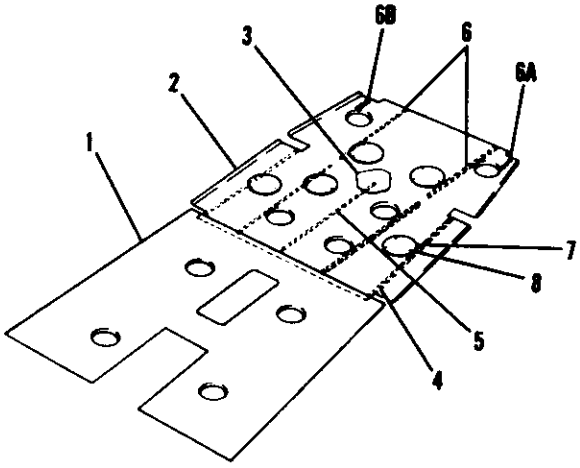

SERIAL 185-0001 THRU 18502310
SERIAL 18051313 THRU 18052384

Figure 27. Fuselage Center Section Floorboards Installation

FIGURE AND INDEX NO.	PART NUMBER	DESCRIPTION 1 2 3 4 5 6 7	UNITS PER ASSY	USABLE ON CODE
27 -		FLOORBOARD INSTALLATION-FUSELAGE CENTER SECTION	NP	A
- 1	0511000-41	FLOORBOARD-CENTER SECTION FRONT	1	
	0512107-39	FLOORBOARD ASSEMBLY-CENTER SECTION AFT	1	C
	0512107-43	FLOORBOARD ASSEMBLY-CENTER SECTION AFT	1	D
- 2	0512107-40	FLOORBOARD-SHEET	1	C
	0512107-44	FLOORBOARD-SHEET	1	D
- 3	0512107-41	PLATE-COVER	1	C
	0512107-45	PLATE-REINFORCEMENT	1	D
- 4	0512107-12	STIFFENER	4	
- 5	0512107-28	STIFFENER	1	
- 6	0512107-30	STIFFENER	2	
- 6A	0713942-1	SUPPORT ASSEMBLY-CHILDS SEAT LH	1	B
- 6B	0713942-2	SUPPORT ASSEMBLY-CHILDS SEAT RH	1	B
		ATTACHING PARTS		
	AN515-8R8	SCREW	2	B
		---*---		
	NAS697A08	NUTPLATE	2	
- 7	S225-1	PLATE-INSPECTION OPENING COVER	5	
		ATTACHING PARTS		
- 8	49330	STUD-TRIMOUNT UC	3	
		---*---		
		A---SERIAL 185-0001 THRU 18502310		
		SERIAL 18051313 THRU 18052384		
		B---SERIAL 18501600 THRU 18502310		
		SERIAL 18052104 THRU 18052384		
		C---SERIAL 185-0001 THRU 18501832		
		SERIAL 18051313 THRU 18052175		
		D---SERIAL 18501833 THRU 18502310		
		SERIAL 18052176 THRU 18052384		

Fuselage (Cont)

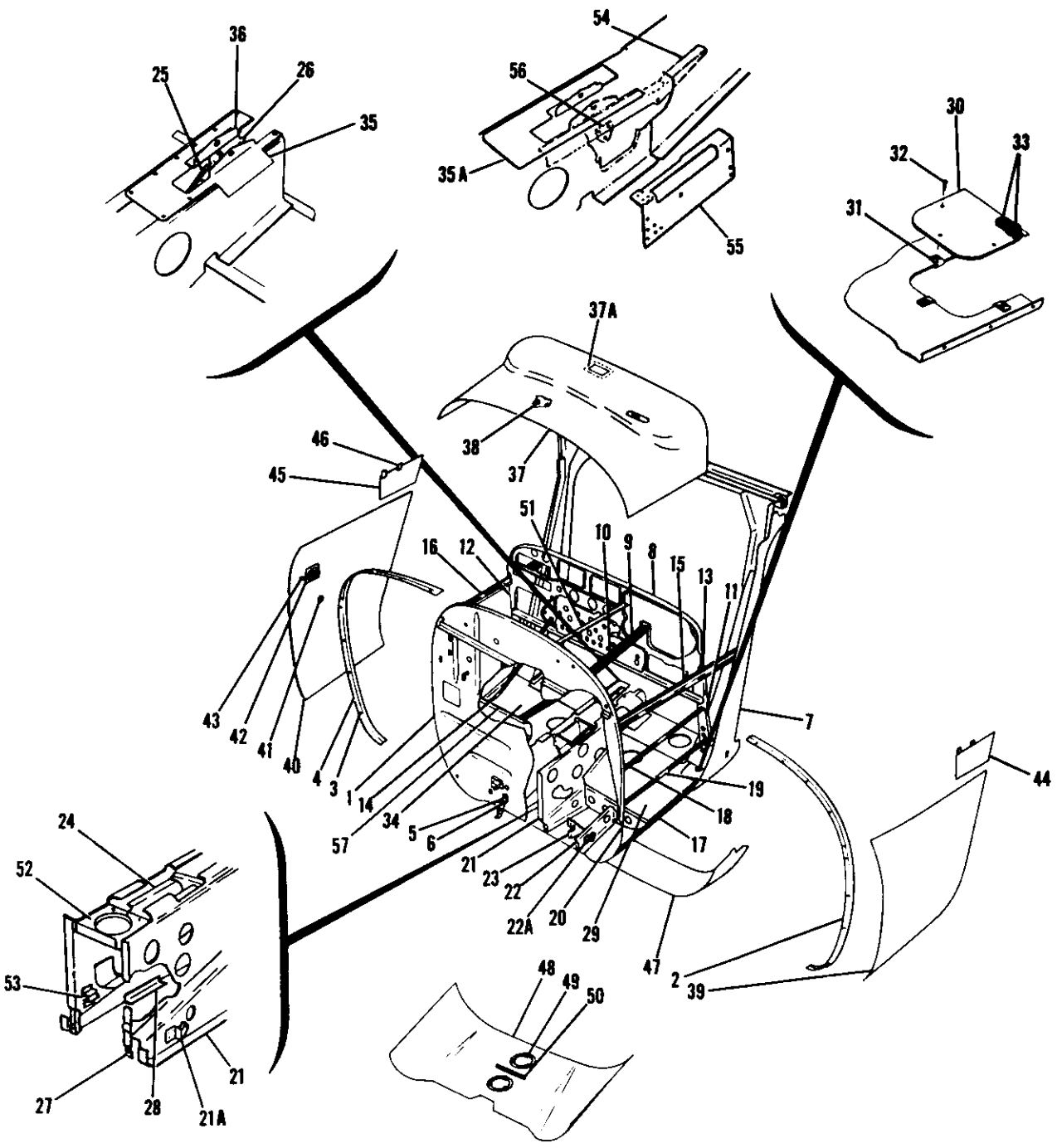

SERIAL 185-0001 THRU 18502310
SERIAL 18051313 THRU 18052384

Figure 28. Fuselage Front Section Structure Assembly

FIGURE AND INDEX NO.	PART NUMBER	DESCRIPTION 1 2 3 4 5 6 7	UNITS PER ASSY	USABLE ON CODE
28 -	0791303-1	STRUCTURE ASSEMBLY-FUSELAGE FRONT SECTION	1	C
	0791303-4	STRUCTURE ASSEMBLY-FUSELAGE FRONT SECTION	1	D
	0791303-5	STRUCTURE ASSEMBLY-FUSELAGE FRONT SECTION	1	H
	0791303-7	STRUCTURE ASSEMBLY-FUSELAGE FRONT SECTION	1	W
	0791309-9	STRUCTURE ASSEMBLY-FUSELAGE FRONT SECTION	1	AA
		STRUCTURE ASSEMBLY-FUSELAGE FRONT SECTION	NP	AD
	0791303-3	STRUCTURE ASSEMBLY-FUSELAGE FRONT SECTION	1	J
	0791303-6	STRUCTURE ASSEMBLY-FUSELAGE FRONT SECTION	1	K
	0791303-8	STRUCTURE ASSEMBLY-FUSELAGE FRONT SECTION	1	X
	0791309-10	STRUCTURE ASSEMBLY-FUSELAGE FRONT SECTION	1	AB
		STRUCTURE ASSEMBLY-FUSELAGE FRONT SECTION	NP	AE
- 1	SEE FIG 33	FIREWALL ASSEMBLY	1	
- 2	0753009-1	STRIP-COWLING ATTACHMENT LH	1	
- 3	0753009-2	STRIP-COWLING ATTACHMENT RH	1	
- 4	4002-Z44-16	RECEPTACLE CLC	18	
- 5	0752033-1	BRACKET ASSEMBLY-LH	1	
	0752033-2	BRACKET ASSEMBLY-RH	1	
- 6	0713121-1	SPACER	2	
- 7	0513006-142	BULKHEAD ASSEMBLY-LANDING GEAR SEE FIGURE 30	1	
- 8	0713185-1	PANEL ASSEMBLY-STATIONARY INSTRUMENT SEE FIGURES 67 & 68-	1	M
	0713755-1	PANEL ASSEMBLY-STATIONARY INSTRUMENT SEE FIGURE 68A	1	Y
	0700193-2	PANEL ASSEMBLY-STATIONARY INSTRUMENT SEE FIGURE 68B	1	Z
	0700193-16	PANEL ASSEMBLY-STATIONARY INSTRUMENT SEE FIGURE 68B	1	AC
	0713965-2	PANEL ASSEMBLY-STATIONARY INSTRUMENT SEE FIGURE 68C	1	AF
- 9	0713506-1	BRACE-INSTRUMENT PANEL	1	M
-10	0713506-2	BRACE-INSTRUMENT PANEL	1	M
	0713236-1	BRACE-INSTRUMENT PANEL LH	1	AG
	0713321-1	BRACE-INSTRUMENT PANEL LH	1	AH
	0713236-2	BRACE-INSTRUMENT PANEL RH	1	N
-11	0713105-1	BULKHEAD-INSTRUMENT PANEL SUPPORT LH	1	
-12	0713105-2	BULKHEAD-INSTRUMENT PANEL SUPPORT RH	1	
-13	0713145-1	BRACE-INSTRUMENT PANEL LH	1	
	0713145-2	BRACE-INSTRUMENT PANEL RH	1	
-14	0713161-1	BRACE-INSTRUMENT PANEL	1	M
-15	0713143-1	STRINGER ASSEMBLY-ENGINE MOUNT UPPER LH	1	
-16	0713143-2	STRINGER ASSEMBLY-ENGINE MOUNT UPPER RH	1	
-17	0713142-1	STRINGER ASSEMBLY-ENGINE MOUNT LOWER	2	
-18	0713767-2	ANGLE-UPPER	2	
-19	0713767-1	ANGLE-LOWER	2	
-20	0713144-1	BULKHEAD-FUSELAGE LOWER LH	1	
	0713144-2	BULKHEAD-FUSELAGE LOWER RH	1	
-21	0510113-21	BULKHEAD-FRONT SECTION TUNNEL LH	1	C
	0510113-23	BULKHEAD ASSEMBLY-FRONT SECTION TUNNEL LH	1	L
	0510113-25	BULKHEAD ASSEMBLY-FRONT SECTION TUNNEL LH	1	U
-21A	0713624-2	ANCHOR-BRAKE CYLINDER	1	G
	0510113-19	BULKHEAD-FRONT SECTION TUNNEL RH	1	V
	0510113-26	BULKHEAD ASSEMBLY-FRONT SECTION TUNNEL RH	1	U
-22	0713008-1	BULKHEAD-RUDDER PEDAL OUTBOARD LH WHEN EXHAUSTED	1	P
		USE 0713241-1		
	0713241-1	BULKHEAD ASSEMBLY-RUDDER PEDAL OUTBOARD LH	1	R
-22A	0713624-2	ANCHOR-BRAKE CYLINDER	1	R
	0713008-2	BULKHEAD-RUDDER PEDAL OUTBOARD RH WHEN EXHAUSTED	1	P
		USE 0713008-4		
	0713008-4	BULKHEAD-RUDDER PEDAL OUTBOARD RH	1	R
-23	0713070-20	BRACKET-PARKING BRAKE	1	
-24	0510135	SUPPORT ASSEMBLY-CONTROL TEE	1	
-25	0713115-3	BRACKET-FORWARD	1	
-26	0713116-3	BRACKET-AFT	1	
-27	0713053-5	ANGLE-TUNNEL REINFORCEMENT LH	1	
	0713053-6	ANGLE-TUNNEL REINFORCEMENT RH	1	
-28	0513038-5	ANGLE-TUNNEL REINFORCEMENT	2	
-29	0713002-10	FLOORBOARD ASSEMBLY-FUSELAGE FRONT SECTION LH	1	
-30	0713002-8	COVER	1	
		ATTACHING PARTS		
-31	NAS395-6-3	NUT	3	
-32	S1021Z6-4	SCREW	3	
		---*---		
-33	MS35489-14	GROMMET	2	
-34	0713002-12	FLOORBOARD-FUSELAGE FRONT SECTION RH	1	

CONTINUED ON NEXT PAGE

FIGURE AND INDEX NO.	PART NUMBER	DESCRIPTION 1 2 3 4 5 6 7	UNITS PER ASSY	USABLE ON CODE
28 -35	0713015-8	COVER ASSEMBLY-TUNNEL AFT	1	E
-35A	0713015-10	COVER ASSEMBLY-TUNNEL AFT	1	F
	0713825-1	COVER ASSEMBLY-TUNNEL AFT	1	S
	SEE FIG 100A	STABILIZER TRIM WHEEL INSTALLATION	1	T
-36	SEE FIG 100A	BRACKET & LOCK ASSEMBLY-TRIM WHEEL	1	
-37	0713151-5	SKIN-DECK	1	M
	0713766-3	SKIN-DECK	1	N
-37A	0713766-10	DOUBLER	1	N
-38	0513112-1	SUPPORT ASSEMBLY	1	M
-39	0713766-7 *	SKIN-FORWARD FUSELAGE LH	1	
-40	0713766-8 *	SKIN-FORWARD FUSELAGE RH	1	
-41	S347-1	FLANGE-PITOT STATIC LINE	2	A
	S1141-1	WASHER-PITOT STATIC LINE	2	A
	S1776-3	BUTTON-PITOT STATIC LINE	2	Q
	S1776-1	BUTTON-PITOT STATIC LINE	2	AF
-42	0713135-2	DOOR ASSEMBLY-COLD AIR INLET	1	
	0713139-1	INLET ASSEMBLY-COLD AIR INLET	1	
	0713140-1	SEAL-COLD AIR INLET	1	
-43	0450286	CLIP	1	
-44	0713766-5	SKIN-RETAINER LH	1	
-45	0713766-6	SKIN-RETAINER RH	1	
-46	0713107-1	CLIP	4	
-47	0713100-25	SKIN-LANDING GEAR BULKHEAD LOWER	1	
	CR163-4-4	RIVET CY	2	
-48	0791303-2	SKIN ASSEMBLY-FUSELAGE FRONT SECTION LOWER	1	
-49	S226-3	DOUBLER	2	
	NAS395-14-3	NUT	6	
-50	0713168-1	STIFFENER	1	
-51	0713182-1	BRACE-INSTRUMENT PANEL STIFFENER	1	M
		ATTACHING PARTS		
	S1021Z6-8	SCREW	1	M
	NAS446-2-3	NUT	1	M
		---*---		
-52	0713052-1	BULKHEAD-TUNNEL	1	B
-53	0510128	BRACKET-RUDDER PEDAL SPRING RH	1	B
	0510128-1	BRACKET-RUDDER PEDAL SPRING LH	1	B
	0713119-1	CHANNEL-PARKING BRAKE STIFFENER	1	
-54	0713174-3	ANGLE-INNER	1	G
-55	0713198-2	ANGLE ASSEMBLY-OUTER	1	G
	NAS697A08	NUTPLATE	1	G
	NAS698A08	NUTPLATE	1	G
-56	0713199-1	SPACER	1	G
-57	SEE FIG 89	HEATER DUCT ASSEMBLY	1	

NOTE. *WHEN ORDERING THIS PART FOR AIRCRAFT PRIOR TO SERIAL 185-1239 & 18051845 ALSO ORDER S1776-3 BUTTON.

A---SERIAL 185-0001 THRU 185-1238
SERIAL 18051313 THRU 18051844
B---SERIAL 18051313 THRU 18052384
C---SERIAL 185-0001 THRU 185-0653
D---SERIAL 185-0654 THRU 185-0776
E---SERIAL 185-0001 THRU 185-0576
F---SERIAL 185-0577 THRU 185-0653
G---SERIAL 185-0654 THRU 18502310
SERIAL 18051313 THRU 18052384
H---SERIAL 185-0777 THRU 185-1300
J---SERIAL 18051313 THRU 18051445
K---SERIAL 18051446 THRU 18051875
L---SERIAL 185-0654 THRU 185-1149
SERIAL 18051313 THRU 18052384
M---SERIAL 185-0001 THRU 185-0776
SERIAL 18051313 THRU 18051445
N---SERIAL 185-0777 THRU 18502310
SERIAL 18051446 THRU 18052384
P---SERIAL 185-0001 THRU 185-0796
SERIAL 18051313 THRU 18051478
Q---SERIAL 185-1239 THRU 18502090
SERIAL 18051845 THRU 18052284
R---SERIAL 185-0797 THRU 18502310
SERIAL 18051479 THRU 18052384
S---SERIAL 185-0654 THRU 185-0949
SERIAL 18051313 THRU 18051607

CONTINUED ON NEXT PAGE

FIGURE AND INDEX NO.	PART NUMBER	DESCRIPTION 1 2 3 4 5 6 7	UNITS PER ASSY	USABLE ON CODE
28 -		T---SERIAL 185-0950 THRU 18502310		
		SERIAL 18051608 THRU 18052384		
		U---SERIAL 185-1150 THRU 18502310		
		V---SERIAL 185-0001 THRU 185-1149		
		SERIAL 18051313 THRU 18052384		
		W---SERIAL 18051876 THRU 18052103		
		X---SERIAL 185-1301 THRU 185-1599		
		Y---SERIAL 185-0777 THRU 185-1300		
		SERIAL 18051446 THRU 18051875		
		Z---SERIAL 185-1301 THRU 185-1599		
		SERIAL 18051876 THRU 18052103		
		AA---SERIAL 18052104 THRU 18052284		
		AB---SERIAL 18501600 THRU 18502007, 18502026, 18502027		
		AC---SERIAL 18501600 THRU 18502090		
		SERIAL 18052104 THRU 18052284		
		AD---SERIAL 18052285 THRU 18052384		
		AE---SERIAL 18502008 THRU 18502025		
		18502028 THRU 18502310		
		AF---SERIAL 18502091 THRU 18502310		
		SERIAL 18052285 THRU 18052384		
		AG---SERIAL 185-0777 THRU 18502007		
		SERIAL 18051466 THRU 18052248		
		AH---SERIAL 18502008 THRU 18502310		
		SERIAL 18052249 THRU 18052384		

Fuselage (Cont)

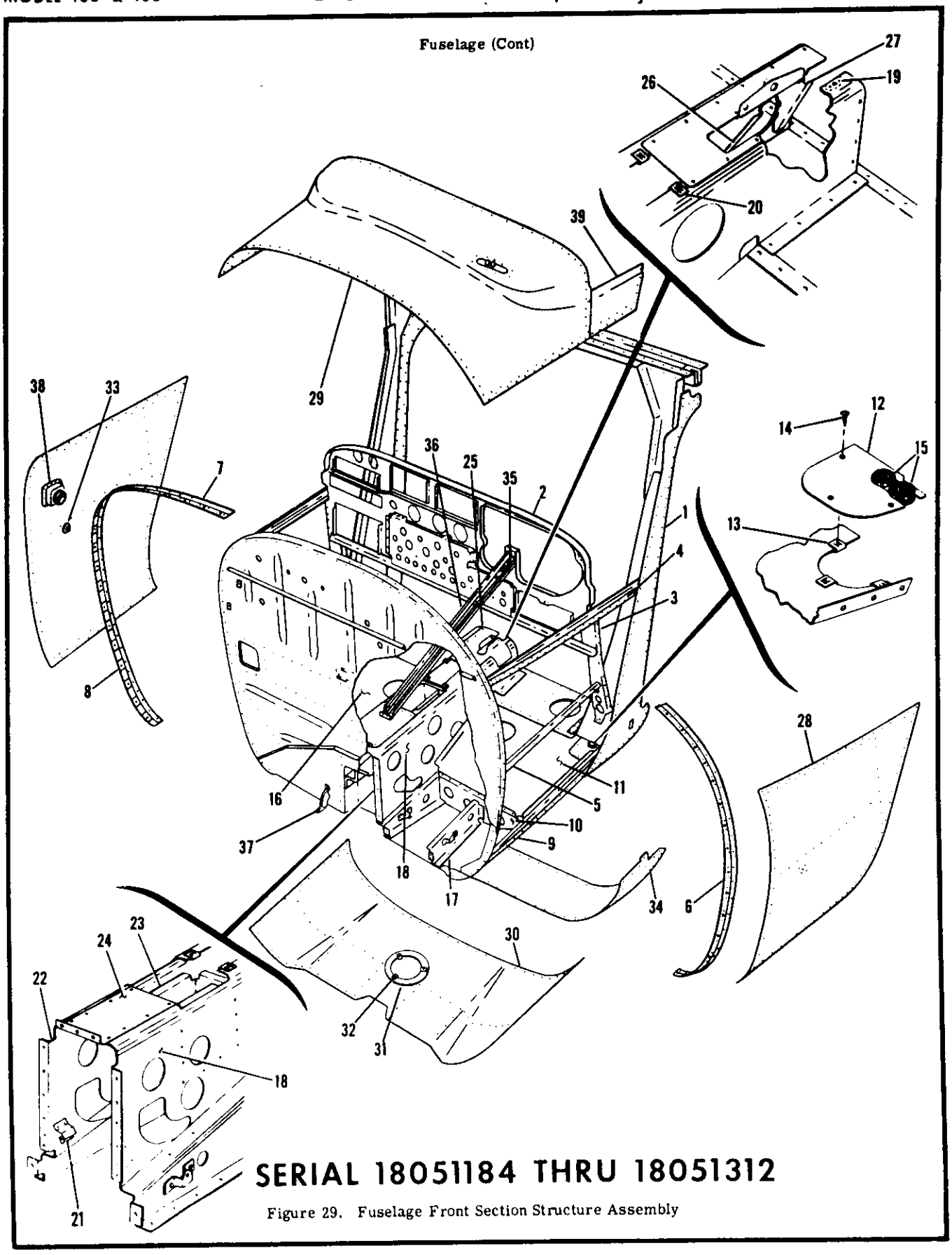

SERIAL 18051184 THRU 18051312

Figure 29. Fuselage Front Section Structure Assembly

FIGURE AND INDEX NO.	PART NUMBER	DESCRIPTION 1 2 3 4 5 6 7	UNITS PER ASSY	USABLE ON CODE
29 -	0791302-8	STRUCTURE ASSEMBLY-FUSELAGE FRONT SECTION	1	A
	0791302-7	FIREWALL ASSEMBLY SEE FIGURE 33	1	
- 1	0791302-4	BULKHEAD ASSEMBLY-LANDING GEAR SEE FIGURE 30	1	
- 2	0713185-1	PANEL ASSEMBLY-STATIONARY SEE FIGURE 67	1	
- 3	0713105-1	BULKHEAD-INSTRUMENT PANEL SUPPORT LH	1	
	0713105-2	BULKHEAD-INSTRUMENT PANEL SUPPORT RH	1	
- 4	0713007-7	STRINGER ASSEMBLY-ENGINE MOUNT UPPER LH	1	
	0713007-8	STRINGER ASSEMBLY-ENGINE MOUNT UPPER RH	1	
- 5	0713100-9	ANGLE	2	
- 6	0753009-1	STRIP-COWLING ATTACHMENT LH	1	
- 7	0753009-2	STRIP-COWLING ATTACHMENT RH	1	
- 8	4002-244-16	RECEPTACLE-COWLING ATTACHMENT CLC	18	
- 9	0713006	STRINGER ASSEMBLY-ENGINE MOUNT LOWER	2	
-10	0713005-3	BULKHEAD-FUSELAGE LOWER LH STA 8.125	1	
	0713005-4	BULKHEAD-FUSELAGE LOWER RH STA 8.125	1	
	0713002-9	FLOORBOARD ASSEMBLY-FUSELAGE FRONT SECTION LH	1	
-11	0713002-1	FLOORBOARD	1	
-12	0713002-8	COVER		
		ATTACHING PARTS		
-13	NAS395-6-3	NUT	3	
-14	S1021Z6-4	SCREW	3	
		---*---		
-15	MS35489-14	GROMMET	2	
-16	0713002-2	FLOORBOARD-FUSELAGE FRONT SECTION RH	1	
-17	0713008-1	BULKHEAD-RUDDER PEDAL OUTBOARD LH	1	
	0713008-2	BULKHEAD-RUDDER PEDAL OUTBOARD RH	1	
-18	0791300-5	BULKHEAD ASSEMBLY-FRONT SECTION TUNNEL	1	
-19	NAS444-2	NUTPLATE	1	
-20	NAS395-12-3	NUT	1	
-21	0510128	BRACKET-RUDDER PEDAL SPRING	1	
	0411342	PLATE-CONTROL	1	
-22	0791300-6	BULKHEAD ASSEMBLY-FRONT SECTION TUNNEL RH	1	
	NAS395-12-3	NUT	2	
	0510128	BRACKET-RUDDER PEDAL SPRING	1	
	0411342	PLATE-CONTROL	1	
-23	0510135	SUPPORT ASSEMBLY-CONTROL TEE	1	
-24	0510139	COVER PLATE-FUSELAGE TUNNEL FORWARD	1	
-25	0713015-6	PLATE ASSEMBLY-COVER SEE FIGURE 100	1	
	0713023-7	BRACKET ASSEMBLY SEE FIGURE 100	1	
-26	0713115-1	BRACKET-FORWARD	1	
-27	0713116-1	BRACKET-AFT	1	
-28	0713100-16	SKIN-FORWARD FUSELAGE LH	1	
	0713100-30	SKIN-FORWARD FUSELAGE RH	1	
-29	0713100-5	SKIN-DECK	1	
-30	0791302-3	SKIN ASSEMBLY-FUSELAGE FRONT SECTION LOWER	1	
-31	S226-3	DOUBLER-INSPECTION OPENING	3	
-32	NAS395-14-3	NUT	2	
-33	S347-1	FLANGE-PITOT STATIC LINE	2	
	MS20822-4D	ELBOW	1	
-34	0713100-25	SKIN-LANDING GEAR BULKHEAD LOWER	1	
-35	0713506-1	BRACE-INSTRUMENT PANEL	1	
-36	0713506-2	BRACE-INSTRUMENT PANEL	1	
-37	0752033-1	BRACKET ASSEMBLY-LH	1	
	0752033-2	BRACKET ASSEMBLY-RH	1	
-38	0713135-2	DOOR ASSEMBLY-AIR VENT	1	
	0713139-1	INLET ASSEMBLY-AIR VENT	1	
	0713140-1	SEAL-AIR VENT INLET	1	
-39	0713100-3	SKIN-RETAINER LH	1	
	0713100-4	SKIN-RETAINER RH	1	

A---SERIAL 18051184 THRU 18051312

Fuselage (Cont)

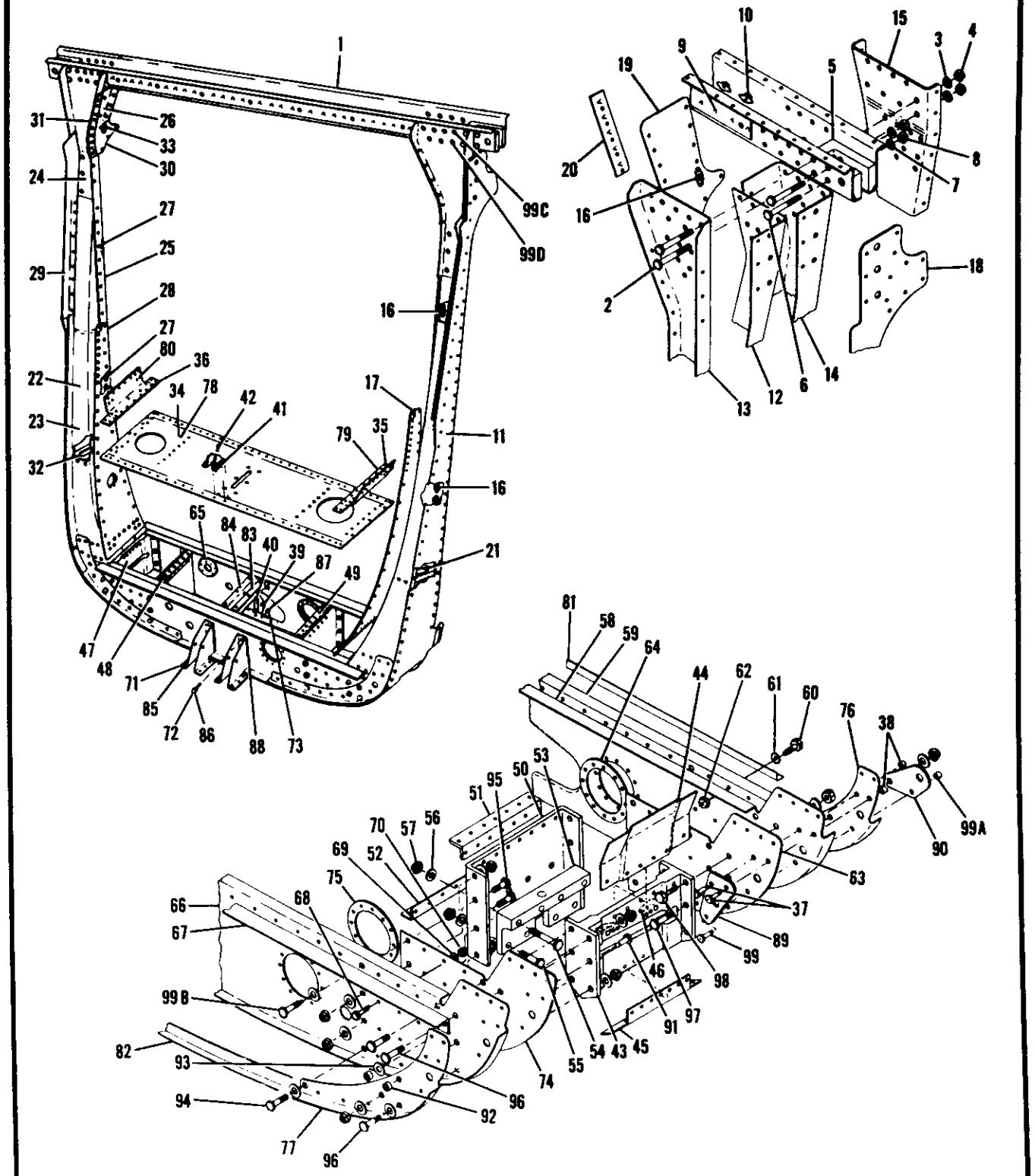

Figure 30. Landing Gear Bulkhead Assembly

FIGURE AND INDEX NO.	PART NUMBER	DESCRIPTION 1 2 3 4 5 6 7	UNITS PER ASSY	USABLE ON CODE
30 -	0513006-142	BULKHEAD ASSEMBLY-LANDING GEAR	1	A
	0791302-4	BULKHEAD ASSEMBLY-LANDING GEAR	1	B
- 1	0711066-1	SPAR ASSEMBLY-FUSELAGE CENTER SECTION FORWARD	1	A
	1213127-1	SPAR ASSEMBLY-FUSELAGE CENTER SECTION FORWARD	1	B
		ATTACHING PARTS		
- 2	AN3-21A	BOLT	4	
- 3	AN960-10	WASHER	8	
- 4	MS21044N3	NUT	4	
		---+---		
- 5	0411129	BLOCK-FUSELAGE SPAR BEARING	2	
		ATTACHING PARTS		
- 6	AN3-20A	BOLT	2	
- 7	AN960-10L	WASHER	2	
- 8	MS21044N3	NUT	2	
		---+---		
- 9	0412496	RETAINER	1	
-10	NAS686A3	NUTPLATE	4	
	S1863-3	NUTPLATE	3	A
-11	0513006-143	DOORPOST ASSEMBLY-FUSELAGE LH	1	A
	0791300-9	DOORPOST ASSEMBLY-FUSELAGE LH	1	B
	0513006-44	BULKHEAD ASSEMBLY-DOORPOST FORWARD LH	1	
-12	0513006-3	BULKHEAD-DOORPOST FORWARD LH	1	
-13	0513006-40	BRACKET-DOORPOST UPPER FORWARD LH	1	
	0513006-46	BULKHEAD ASSEMBLY-DOORPOST AFT LH	1	
-14	0513006-34	BULKHEAD-DOORPOST AFT LH	1	
-15	0513006-38	BRACKET-DOORPOST LH	1	
-16	NAS680A3	NUTPLATE	4	
-17	0513006-8	PLATE-DOOR SPLICE LH	1	
-18	0513006-101	SKIN-DOORPOST OUTER LH	1	
-19	0513006-42	REINFORCEMENT-DOORPOST INBOARD LH	1	
-20	0513006-25	RETAINER-HEADLINER LH	1	
-21	0713496-3	BRACKET-STIFFENER LH	1	
-22	0513006-144	DOORPOST ASSEMBLY-FUSELAGE RH	1	A
	0791300-10	DOORPOST ASSEMBLY-FUSELAGE RH	1	B
	0513006-45	BULKHEAD ASSEMBLY-DOORPOST FORWARD RH	1	
-23	0513006-21	BULKHEAD-DOORPOST FORWARD RH	1	
-24	0513006-41	BRACKET-DOORPOST UPPER FORWARD RH	1	
	0513006-47	BULKHEAD ASSEMBLY-DOORPOST AFT RH	1	
-25	0513006-35	BULKHEAD-DOORPOST AFT RH	1	
-26	0513006-39	BRACKET-DOORPOST UPPER AFT RH	1	
-27	NAS680A3	NUTPLATE	3	
-28	0513006-22	PLATE-DOORPOST SPLICE RH	1	
-29	0513006-102	SKIN-DOORPOST OUTER RH	1	
-30	0513006-43	REINFORCEMENT-DOORPOST UPPER INBOARD RH	1	
-31	0513006-26	RETAINER-HEADLINER RH	1	
-32	0713496-4	BRACKET-STIFFENER	1	
-33	NAS680A3	NUTPLATE	1	
-34	0513006-11	FLOORBOARD-LANDING GEAR SUPPORT	1	B
-35	0713495-53	ANGLE-LANDING GEAR BULKHEAD SPLICE LH	1	B
-36	0713495-54	ANGLE-LANDING GEAR BULKHEAD SPLICE RH	1	B
-37	NAS178-8-7	RIVET-HI-SHEAR	4	
-38	NAS179-8	COLLAR	4	
-39	0510163-1	BRACKET-FLAP RETURN FUSELAGE LOWER PULLEY	1	A
	0510163	BRACKET-FLAP RETURN FUSELAGE LOWER PULLEY	1	B
		ATTACHING PARTS		
	AN520-10R7	SCREW	1	
	MS21044N3	NUT	1	
		---+---		

CONTINUED ON NEXT PAGE

FIGURE AND INDEX NO.	PART NUMBER	DESCRIPTION 1 2 3 4 5 6 7	UNITS PER ASSY	USABLE ON CODE
30 -40	0513006-135	SPACER	1	A
-41	0713497-3	BRACKET ASSEMBLY-FORWARD ELEVATOR STOP	1	
-42	NAS428H3-6	BOLT	1	
	0513006-138	BULKHEAD ASSEMBLY-LANDING GEAR SUPPORT	1	A
	0513006-151	BULKHEAD ASSEMBLY-LANDING GEAR SUPPORT	1	B
	0713495-63	BRACKET ASSEMBLY-LANDING GEAR SUPPORT OUTBOARD LH	1	
-43	0713495-61	BRACKET-LANDING GEAR SUPPORT OUTBOARD LH	1	
-44	0713495-57	ANGLE-LANDING GEAR SUPPORT OUTBOARD LH	1	
-45	0713495-5	ANGLE-LANDING GEAR SUPPORT OUTBOARD	1	
-46	NAS682A4	NUTPLATE	2	
-47	0713495-64	BRACKET ASSEMBLY-LANDING GEAR SUPPORT OUTBOARD RH	1	
	0713495-62	BRACKET-LANDING GEAR SUPPORT OUTBOARD RH	1	
	0713495-58	ANGLE-LANDING GEAR SUPPORT UPPER OUTBOARD RH	1	
	0713495-5	ANGLE-LANDING GEAR SUPPORT LOWER OUTBOARD RH	1	
	NAS682A4	NUTPLATE	2	
-48	0713495-22	BRACKET ASSEMBLY-LANDING GEAR SUPPORT INBOARD RH	1	
-49	0713495-21	BRACKET ASSEMBLY-LANDING GEAR SUPPORT INBOARD LH	1	
-50	0713495-7	BRACKET-LANDING GEAR SUPPORT INBOARD LH	1	
	0713495-8	BRACKET-LANDING GEAR SUPPORT INBOARD RH	1	
-51	0713495-18	ANGLE-LANDING GEAR SUPPORT UPPER INBOARD	1	
-52	0742115-26	ANGLE-LANDING GEAR SUPPORT LOWER INBOARD LH	1	
	0742115-25	ANGLE-LANDING GEAR SUPPORT LOWER INBOARD RH	1	
-53	0713495-6	ANGLE-LANDING GEAR ATTACHMENT	1	
		ATTACHING PARTS		
-54	AN5-15A	BOLT	4	
-55	AN5-7A	BOLT	6	
-56	AN960-516L	WASHER	16	
-57	NAS679A5	NUT	10	
		---*---		
	0513006-139	BULKHEAD ASSEMBLY-LANDING GEAR SUPPORT AFT	1	A
	0513006-105	BULKHEAD ASSEMBLY-LANDING GEAR SUPPORT AFT	1	B
-58	0513006-103	BULKHEAD-LANDING GEAR SUPPORT AFT	1	
-59	0513006-141	ANGLE-AFT BULKHEAD REINFORCEMENT	1	A
	0513006-24	ANGLE-AFT BULKHEAD REINFORCEMENT	1	B
		ATTACHING PARTS		
-60	AN3-5A	BOLT	2	
-61	AN960-10	WASHER	2	
-62	MS21044N3	NUT	2	
		---*---		
-63	0713495-13	PLATE-AFT BULKHEAD REINFORCEMENT LH	1	
	0713495-14	PLATE-AFT BULKHEAD REINFORCEMENT RH	1	
-64	0513006-61	DOUBLER	1	
-65	0513006-62	DOUBLER	1	
	0513006-140	BULKHEAD ASSEMBLY-LANDING GEAR SUPPORT FORWARD	1	A
	0513006-104	BULKHEAD ASSEMBLY-LANDING GEAR SUPPORT FORWARD	1	B
-66	0513006-9	BULKHEAD-LANDING GEAR SUPPORT FORWARD	1	
-67	0513006-23	ANGLE-FORWARD BULKHEAD REINFORCEMENT	1	
		ATTACHING PARTS		
-68	AN3-5A	BOLT	4	
-69	AN960-10	WASHER	4	
-70	MS21044N3	NUT	4	
		---*---		
-71	0510110	BRACKET-CONTROL PULLEY	2	B
		ATTACHING PARTS		
-72	AN3-4A	BOLT	2	B
-73	MS21044N3	NUT	2	B
		---*---		
-74	0713495-15	PLATE-FORWARD BULKHEAD REINFORCEMENT LH	1	
	0713495-16	PLATE-FORWARD BULKHEAD REINFORCEMENT RH	1	
-75	0513006-61	DOUBLER	1	
	0513006-62	DOUBLER	1	
-76	0713495-9	STIFFENER-BULKHEAD AFT LH	1	
	0713495-10	STIFFENER-BULKHEAD AFT RH	1	
-77	0713495-11	STIFFENER-BULKHEAD FORWARD LH	1	
	0713495-12	STIFFENER-BULKHEAD FORWARD RH	1	

CONTINUED ON NEXT PAGE

FIGURE AND INDEX NO.	PART NUMBER	DESCRIPTION 1 2 3 4 5 6 7	UNITS PER ASSY	USABLE ON CODE
30 -78	0513006-11	FLOORBOARD-LANDING GEAR SUPPORT	1	A
-79	0713495-53	ANGLE-LANDING GEAR BULKHEAD SPLICE LH	1	A
-80	0713495-54	ANGLE-LANDING GEAR BULKHEAD SPLICE RH	1	A
-81	0713152-1	DOUBLER-REAR	1	A
-82	0713153-1	DOUBLER-FRONT	1	A
-83	0510112	BRACKET-ELEVATOR BELLCRANK LH	1	
-84	0510112-1	BRACKET-ELEVATOR BELLCRANK RH	1	
-85	0510110	BRACKET-CONTROL PULLEY	2	A
		ATTACHING PARTS		
-86	AN3-4A	BOLT	2	A
-87	MS21044N3	NUT	2	A
		---*---		
-88	0513006-134	SPACER	2	A
-89	0713495-55	SPACER-WING STRUT FITTING FORWARD	2	
-90	0713495-17	PLATE-WING STRUT FITTING	2	
-91	NAS178-10-6	RIVET-HI-SHEAR	4	
-92	NAS179-10	COLLAR	4	
-93	AN960-516L	WASHER	2	
-94	AN5-6A	BOLT	4	
	AN960-516L	WASHER	4	
	NAS679A5	NUT	4	
-95	AN6-6A	BOLT	10	
	AN960-616L	WASHER	10	
	NAS679A6	NUT	10	
-96	AN5-7A	BOLT	8	
	AN960-516L	WASHER	8	
	NAS679A5	NUT	8	
-97	AN6-10A	BOLT	2	
	AN960-616L	WASHER	2	
	NAS679A6	NUT	2	
-98	AN6-7A	BOLT	8	
	AN960-616L	WASHER	8	
	NAS679A6	NUT	8	
-99	NAS178-8-7	RIVET-HI-SHEAR	2	
-99A	NAS179-8	COLLAR	2	
-99B	AN5-7A	BOLT	4	
	AN960-516L	WASHER	8	
	NAS679A5	NUT	4	
-99C	R3104T6-5	BOLT HKM	8	A
	NAS1080C6	COLLAR HKM	8	A
	AN960-10	WASHER	8	A
-99D	R3104T6-5	BOLT HKM	6	A
	NAS1080C6	COLLAR HKM	6	A
	0713172-1	SPACER	6	A

A---SERIAL 185-0001 THRU 18502310
SERIAL 18051313 THRU 18052384
B---SERIAL 18051184 THRU 18051312

Fuselage (Cont)

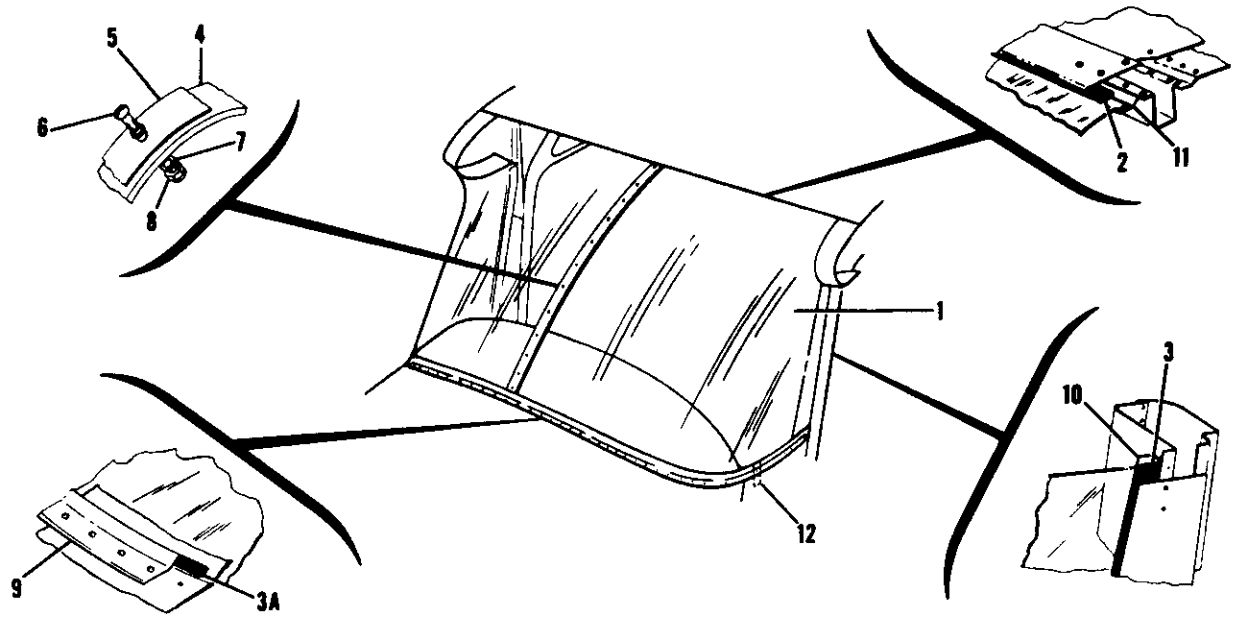

Figure 31. Windshield Installation

FIGURE AND INDEX NO.	PART NUMBER	DESCRIPTION 1 2 3 4 5 6 7	UNITS PER ASSY	USABLE ON CODE
31 -		WINDSHIELD INSTALLATION	NP	
- 1	0713100-10	WINDSHIELD	1	
	0713100-11	WINDSHIELD TINTED	1	
- 2	S1389-6	PAD-FELT 46.50 IN LG BKI REF S1389-6-46.50	1	
- 3	S1389-2	PAD-FELT 20.00 IN LG BKI REF S1389-2-20.00	2	
- 3A	S1389-5	PAD-FELT 80.00 IN LG BKI REF S1389-2-80.00	1	
	S1078-3	SEALER-TAPE LOWER 78 IN LG BULK ITEM	AR	
- 4	0713100-15	STRIP-WINDSHIELD CENTER INNER	1	E
	0713332-1	STRIP ASSEMBLY-WINDSHIELD CENTER INNER	1	F
	0713331-1	BRACKET-COMPASS	1	F
- 5	0713118-200	STRIP-WINDSHIELD CENTER OUTER	1	
		ATTACHING PARTS		
- 6	AN520-10R14	SCREW	4	
- 7	S350	WASHER	12	
- 8	22NKM-02	NUT EN	4	
		---•---		
- 9	0713766-4	STRIP-WINDSHIELD RETAINING OUTER	1	A
	0713100-13	STRIP-WINDSHIELD RETAINING OUTER	1	B
-10	0713106-1	STRIP-WINDSHIELD RETAINING INSIDE LH WHEN EXHAUSTED USE 0713248-1	1	C
	0713248-1	RETAINER-WINDSHIELD INNER LH	1	D
	0713106-2	STRIP-WINDSHIELD RETAINING INSIDE RH WHEN EXHAUSTED USE 0713248-2	1	C
	0713248-2	RETAINER-WINDSHIELD INNER RH	1	D
-11	0511000-63	STRIP-WINDSHIELD RETAINING UPPER	1	
-12	0713107-1	CLIP-FAIRING RETAINER	2	B

A---SERIAL 185-0001 THRU 18502310
SERIAL 18051313 THRU 18052384
B---SERIAL 18051184 THRU 18051312
C---SERIAL 185-0001 THRU 185-0967
SERIAL 18051313 THRU 18051607
D---SERIAL 185-0968 THRU 18502310
SERIAL 18051608 THRU 18052384
E---SERIAL 185-0001 THRU 18502090
SERIAL 18051184 THRU 18052284
F---SERIAL 18502091 THRU 18502310
SERIAL 18052285 THRU 18052384

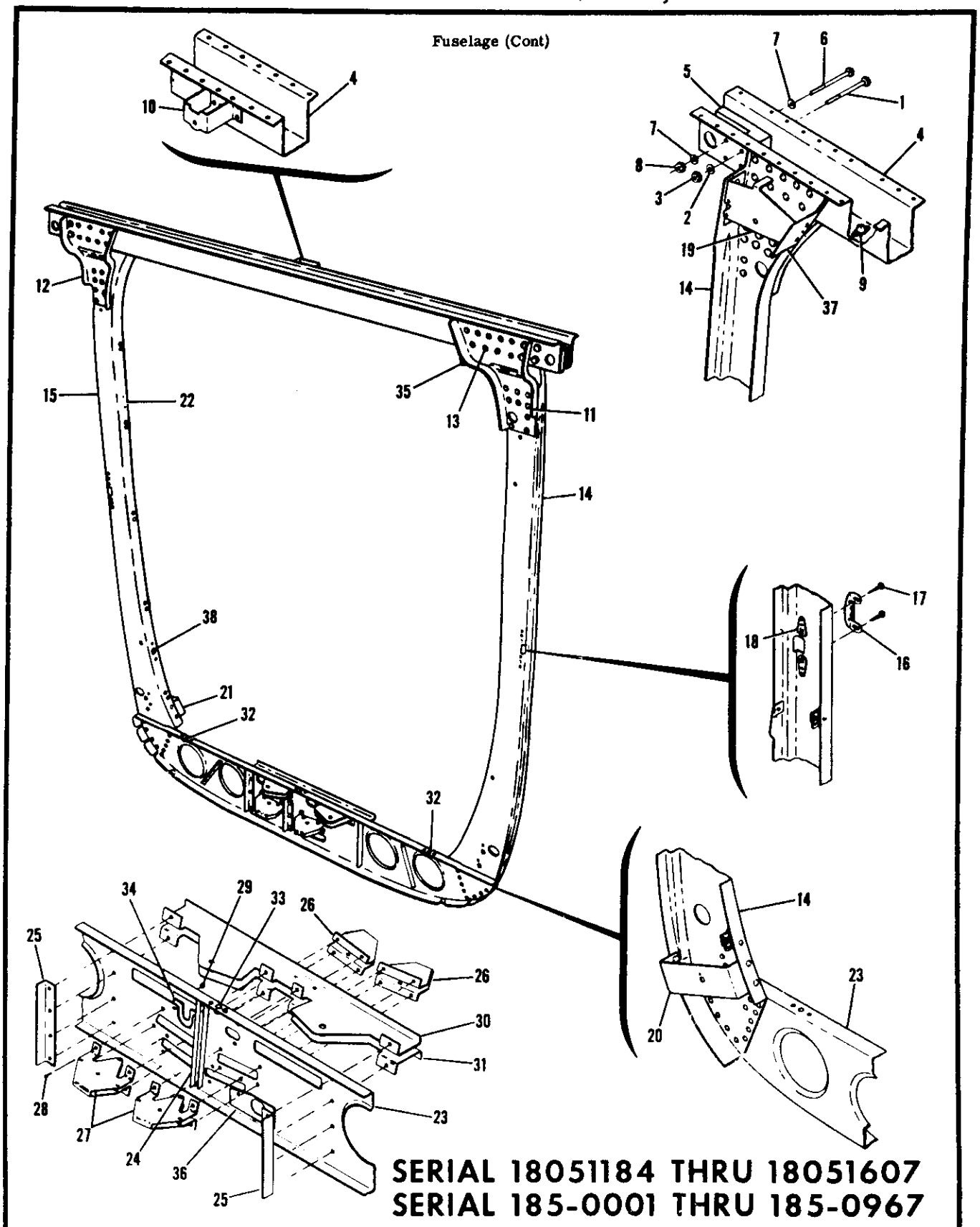

Figure 32. Fuselage Bulkhead Assembly Sta. 65.33

FIGURE AND INDEX NO.	PART NUMBER	DESCRIPTION 1 2 3 4 5 6 7	UNITS PER ASSY	USABLE ON CODE
32 -	0512124-41	BULKHEAD ASSEMBLY-FUSELAGE STA 65.33	1	A
	0791102-4	BULKHEAD ASSEMBLY-FUSELAGE STA 65.33	1	B
	0791102-5	SPAR ASSEMBLY-FUSELAGE REAR	1	
		ATTACHING PARTS		
- 1	AN3-20A	BOLT	4	
- 2	AN960-10	WASHER	4	
- 3	MS21044N3	NUT	4	
		---*---		
- 4	1210029-2	SPAR-FUSELAGE REAR	1	
- 5	0512122	BLOCK-SPAR BEARING	2	
		ATTACHING PARTS		
- 6	AN3-20A	BOLT	2	
- 7	AN960-10	WASHER	4	
- 8	MS21044N3	NUT	2	
		---*---		
- 9	NAS680A3	NUTPLATE	2	
-10	0512137	BRACKET-PULLEY	1	
-11	0512124-79	BRACE-BULKHEAD TO REAR SPAR LH	1	
-12	0512124-80	BRACE-BULKHEAD TO REAR SPAR RH	1	
-13	R3104T6-3	HUCKBOLT HKM	36	A
	NAS1080C6	COLLAR HKM	36	A
	2DC-C6	COLLAR ALTERNATE	36	
	6DC-C6	COLLAR ALTERNATE	36	
	0791100-12	CHANNEL ASSEMBLY-LH	1	
	0791100-11	CHANNEL ASSEMBLY-RH	1	
-14	0512124-40	CHANNEL-LH	1	
-15	0512124-39	CHANNEL-RH	1	
-16	0711024-4	STRIKER PLATE-DOOR LATCH	1	
		ATTACHING PARTS		
-17	AN520-10R8	SCREW	2	
-18	NAS687A3	NUT	2	
		---*---		
-19	0512139-2	BRACKET-AILERON PULLEY UPPER LH	1	
	0512139-3	BRACKET-AILERON PULLEY UPPER RH	1	
-20	0512134	BRACKET-PULLEY LH	1	
-21	0512134-1	BRACKET-PULLEY RH	1	
-22	NAS680A3	NUTPLATE	3	A
	0512124-42	BULKHEAD ASSEMBLY-LOWER	1	A
	0512124-13	BULKHEAD ASSEMBLY-LOWER	1	B
-23	0512133	BULKHEAD LOWER	1	
-24	0512124-5	ANGLE-BULKHEAD CENTER REINFORCEMENT	1	C
	0711697-2	STIFFENER-BULKHEAD	1	D
-25	0512124-7	ANGLE-BULKHEAD REINFORCEMENT	4	A
	0512124-7	ANGLE-BULKHEAD REINFORCEMENT	2	B
-26	0512129	BRACKET-FLAP RETURN PULLEY	2	
-27	0512128	BRACKET-FLAP PULLEY	2	
		ATTACHING PARTS		
-28	AN520-10R7	SCREW	4	
-29	MS21044N3	NUT	4	
		---*---		
-30	0512132	BRACKET ASSEMBLY-AILERON PULLEY UPPER WEU 0512132-19	1	
	0512132-19	BRACKET ASSEMBLY-AILERON PULLEY UPPER	1	
	0512132-4	FAIRLEAD	1	
-31	0512132-1	BRACKET ASSEMBLY-AILERON PULLEY LOWER WEU 0512132-21	1	
	0512132-21	BRACKET ASSEMBLY-AILERON PULLEY LOWER	1	
	0512132-22	FAIRLEAD	1	
	0512132-5	FAIRLEAD	1	
-32	NAS680A4	NUTPLATE	2	
-33	NAS680A3	NUTPLATE	1	
-34	0512152	RUB STRIP	1	
-35	AN742D2	CLAMP	1	B
		ATTACHING PARTS		
	S1021Z4-6	SCREW	1	B
		---*---		
-36	0512124-15	FAIRLEAD	1	
-37	0512124-32	RUB STRIP-AILERON CABLE	2	
-38	NAS686A4	NUTPLATE	2	

A---SERIAL 185-0001 THRU 185-0967
SERIAL 18051313 THRU 18051607
B---SERIAL 18051184 THRU 18051312
C---SERIAL 185-0001 THRU 185-0917
SERIAL 18051184 THRU 18051559
D---SERIAL 185-0918 THRU 185-0967
SERIAL 18051560 THRU 18051607

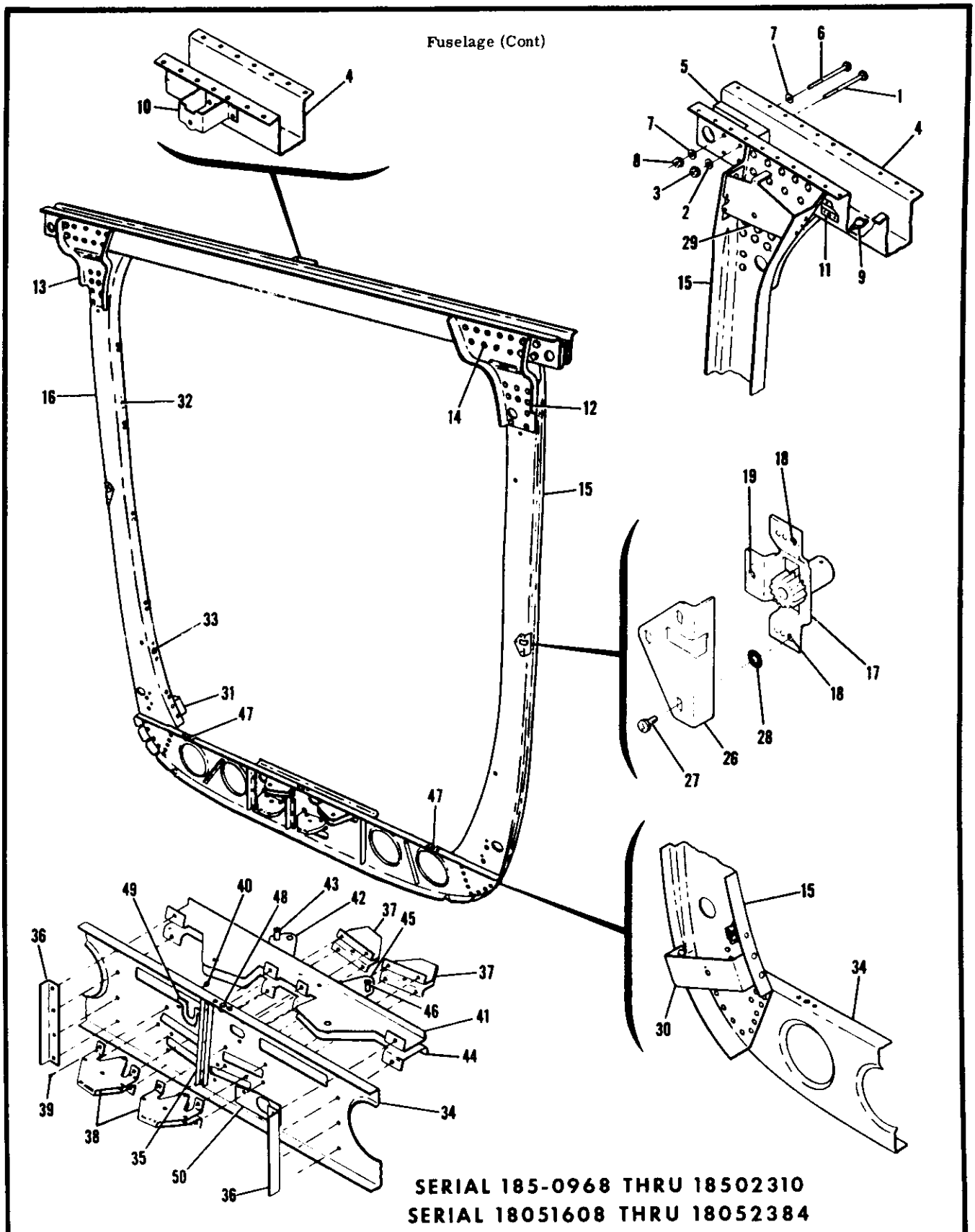

Figure 32A. Fuselage Bulkhead Assembly Sta. 65.33

FIGURE AND INDEX NO.	PART NUMBER	DESCRIPTION 1 2 3 4 5 6 7	UNITS PER ASSY	USABLE ON CODE
32A-	0512124-52	BULKHEAD ASSEMBLY-FUSELAGE STA 65.33	1	A
	0512124-73	BULKHEAD ASSEMBLY-FUSELAGE STA 65.33	1	B
	0791102-5	SPAR ASSEMBLY-FUSELAGE REAR	1	
		ATTACHING PARTS		
- 1	AN3-20A	BOLT	4	
- 2	AN960-10	WASHER	4	
- 3	MS21044N3	NUT	4	
		---*---		
- 4	1210029-2	SPAR-FUSELAGE REAR WEU 1210029-5	1	C
	1210029-5	SPAR-FUSELAGE REAR	1	D
- 5	0512122	BLOCK-SPAR BEARING	2	
		ATTACHING PARTS		
- 6	AN3-20A	BOLT	2	
- 7	AN960-10	WASHER	4	
- 8	MS2065-1032C	NUT	2	
		---*---		
- 9	NAS680A3	NUTPLATE	2	
-10	0512137	BRACKET-PULLEY	1	
-11	0711696-1	BRACKET-AILERON CABLE GUIDE	2	
	NAS680A3	NUTPLATE	2	
-12	0512124-79	BRACE-BULKHEAD TO REAR SPAR LH	1	
-13	0512124-80	BRACE-BULKHEAD TO REAR SPAR RH	1	
-14	R3104T6-3	HUCKBOLT HKM	36	
	NAS1080C6	COLLAR HKM	36	
	2DC-C6	COLLAR ALTERNATE	36	
	6DC-C6	COLLAR ALTERNATE	36	
	0791102-19	CHANNEL ASSEMBLY-LH	1	
	0791102-18	CHANNEL ASSEMBLY-RH	1	
-15	0512124-53	CHANNEL-LH	1	A
	0512124-75	CHANNEL-LH	1	B
-16	0512124-54	CHANNEL-RH	1	A
	0512124-74	CHANNEL-RH	1	B
-17	0711699-1	CLUTCH ASSEMBLY-DOOR LATCH LH	1	
	0711699-2	CLUTCH ASSEMBLY-DOOR LATCH RH	1	
-18	NAS696A4	NUTPLATE	2	
-19	NAS680A4	NUTPLATE	1	
-20		DELETED, NOT AVAILABLE		
-21		DELETED, NOT AVAILABLE		
-22		DELETED, NOT AVAILABLE		
-23		DELETED, NOT AVAILABLE		
-24		DELETED, NOT AVAILABLE		
-25		DELETED, NOT AVAILABLE		
-26	0711698-3	ESCUTCHEON-LH	1	
	0711698-4	ESCUTCHEON-RH	1	
-27	AN525-416R8	SCREW	3	
-28	0711698-5	WASHER-ABRASIVE	3	
-29	0512139-2	BRACKET-AILERON PULLEY UPPER LH	1	
	0512139-3	BRACKET-AILERON PULLEY UPPER RH	1	
-30	0512134	BRACKET-PULLEY LH	1	
-31	0512134-1	BRACKET-PULLEY RH	1	
-32	NAS680A3	NUTPLATE	3	
-33	NAS686A4	NUTPLATE	2	
	0512124-42	BULKHEAD ASSEMBLY-LOWER	1	A
		BULKHEAD ASSEMBLY-LOWER	NP	B
-34	0512133	BULKHEAD-LOWER	1	
-35	0711697-2	STIFFENER-BULKHEAD	1	
-36	0512124-7	ANGLE-BULKHEAD REINFORCEMENT	4	
-37	0512129	BRACKET-FLAP RETURN PULLEY	2	
-38	0512128	BRACKET-FLAP PULLEY	2	
-39	AN520-10R7	SCREW	4	
-40	MS21044N3	NUT	4	
-41	0512132-19	BRACKET ASSEMBLY-AILERON PULLEY UPPER	1	A
	0712043-1	BRACKET ASSEMBLY-AILERON PULLEY UPPER	1	B
	0512132-4	FAIRLEAD	1	
-42	0742002-2	BRACKET ASSY-AILERON INTERCONNECT	1	B
-43	AN515-6R10	SCREW	1	B
	AN960PD6L	WASHER	1	B
	NAS43DD0-21	SPACER	1	B

CONTINUED ON NEXT PAGE

FIGURE AND INDEX NO.	PART NUMBER	DESCRIPTION 1 2 3 4 5 6 7	UNITS PER ASSY	USABLE ON CODE
32A-44	0512132-21	BRACKET ASSEMBLY-AILERON PULLEY LOWER		A
	0712043-2	BRACKET ASSEMBLY-AILERON PULLEY LOWER	1	B
	0512132-22	FAIRLEAD		
	0512132-5	FAIRLEAD	1	
-45	0742002-4	BRACKET ASSY-AILERON INTERCONNECT	1	B
-46	AN515-6R10	SCREW	1	B
	AN960PD6L	WASHER	1	B
	NAS43DD0-21	SPACER	1	B
-47	NAS680A4	NUTPLATE	2	
-48	NAS680A3	NUTPLATE	1	
-49	0512152	RUB STRIP	1	
-50	0512124-15	FAIRLEAD	1	
		A---SERIAL 185-0968 THRU 18501832 SERIAL 18051608 THRU 18052175 B---SERIAL 18501833 THRU 18502310 SERIAL 18052176 THRU 18052384 C---SERIAL 185-0968 THRU 18501930, 18501932 THRU 1801934 SERIAL 18051608 THRU 18052222 D---SERIAL 18501931, 18501935 THRU 18502310 SERIAL 18052223 THRU 18052384		

Fuselage (Cont)

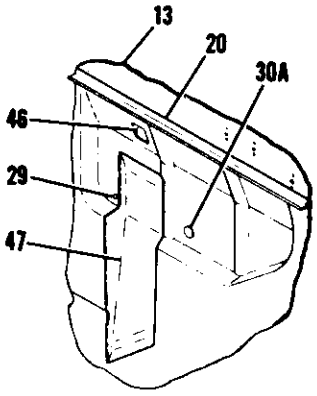

18502008 THRU 18502025
18502028 & ON

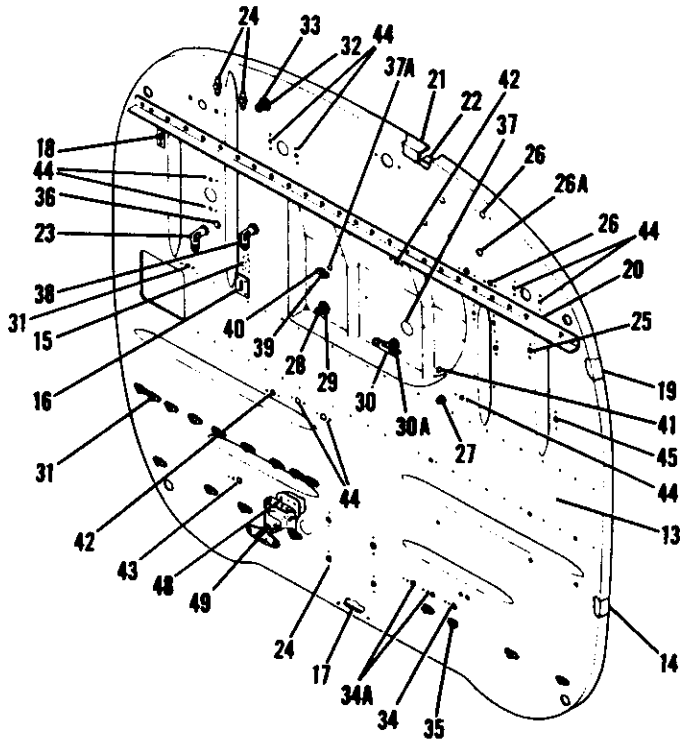

18051313 & ON
185-0001 & ON

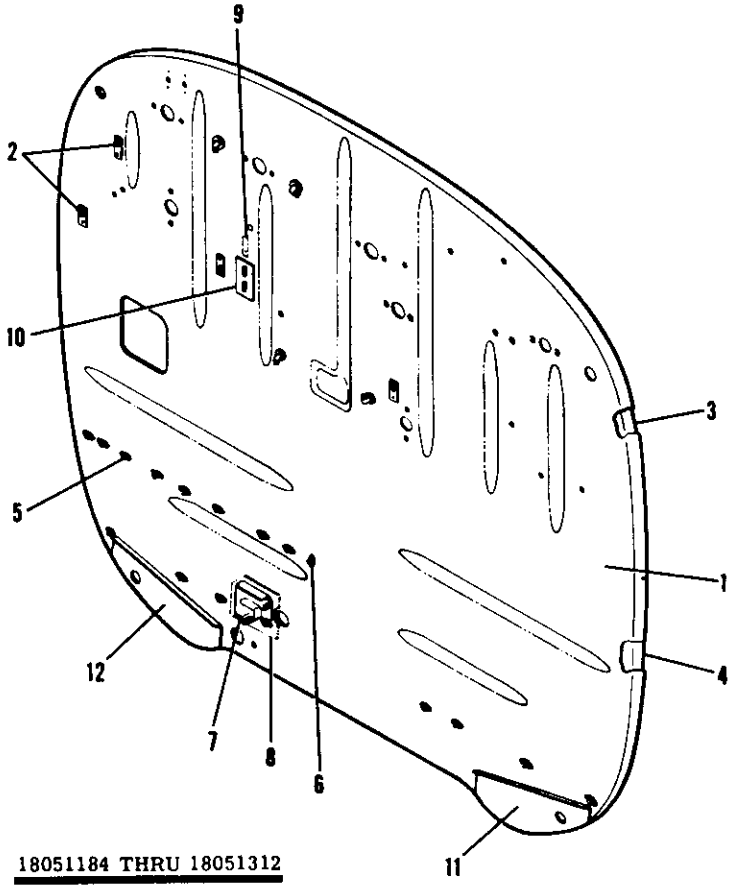

18051184 THRU 18051312

Figure 33. Firewall Assembly

FIGURE AND INDEX NO.	PART NUMBER	DESCRIPTION 1 2 3 4 5 6 7	UNITS PER ASSY	USABLE ON CODE
33 -	0791302-7	FIREWALL ASSEMBLY	1	A
- 1	0753002-9	SHEET-FIREWALL	1	
- 2	0753000-13	DOUBLER	4	
- 3	0753000-15	DOUBLER-LH	1	
	0753000-14	DOUBLER-RH	1	
- 4	0753000-23	DOUBLER-LH	1	
	0753000-24	DOUBLER-RH	1	
- 5	NAS444-4	NUT	16	
- 6	NAS444-4A	NUT	2	
- 7	0450111	BRACKET-FUEL STRAINER	1	
- 8	0753008-1	DOUBLER	1	
- 9	0713149-1	BRACKET	1	
-10	0713147-1	DOUBLER	1	
-11	0753017-1	REINFORCEMENT-LH FLOATPLANE ONLY	1	A
-12	0753017-2	REINFORCEMENT-RH FLOATPLANE ONLY	1	A
	0753012-1	FIREWALL ASSEMBLY WHEN EXHAUSTED USE 0753023-201	1	B
	0753018-201	FIREWALL ASSEMBLY WHEN EXHAUSTED USE 0753023-200	1	H
	0753023-200	FIREWALL ASSEMBLY	1	L
	0753018-202	FIREWALL ASSEMBLY WHEN EXHAUSTED USE 0753023-201	1	J
	0753023-201	FIREWALL ASSEMBLY	1	M
	0753023-202	FIREWALL ASSEMBLY	1	P
-13	0753012-7	SHEET-FIREWALL WHEN EXHAUSTED USE 0753023-3	1	B
	0753018-3	SHEET-FIREWALL WHEN EXHAUSTED USE 0753023-3	1	K
	0753023-3	SHEET-FIREWALL WEU 0753023-6	1	N
	0753023-4	SHEET-FIREWALL WEU 0753023-7	1	P
-14	0753000-28	DOUBLER-LOWER LH	1	
	0753000-29	DOUBLER-LOWER RH	1	
-15	0713149-1	BRACKET	1	
-16	0753013-1	DOUBLER	1	
-17	0753021-1	SPACER	1	
-18	0753000-13	DOUBLER	1	
-19	0753000-27	DOUBLER-UPPER LH	1	
	0753000-26	DOUBLER-UPPER RH	1	
-20	0753018-4	ANGLE	1	
-21	0753018-5	ANGLE	1	
-22	0753018-6	DOUBLER	2	
-23	AN833-4D	ELBOW OIL PRESSURE	1	
	AN924-4D	NUT	1	
-24	NAS680A4K	NUTPLATE	5	B
	NAS680A4K	NUTPLATE	6	E
-25	NAS680A3K	NUTPLATE	2	B
-26	NAS680A4	NUTPLATE	3	B
-26A	NAS697A4K	NUTPLATE	2	E
	NAS697A3K	NUTPLATE	2	E
-27	AN833-2D	ELBOW	1	B
-28	AN832-2D	UNION STRAINER TO PRIMER	1	C
	AN924-2D	NUT	3	C
	AN924-2D	NUT	2	D
-29	CM2692-10-1S	PLUG BUTTON	2	D
-30	AN834-2D	TEE PRIMER	1	C
-30A	CM2692-10-1S	PLUG BUTTON	1	D
-31	S1863-3	NUTPLATE	17	
-32	AN832-3D	UNION	1	B
	AN832-2D	UNION FUEL PRESSURE	1	D
	AN924-3D	NUT	1	B
-33	CM2692-12-1H	PLUG BUTTON	1	C
-34	NAS697A06L	NUTPLATE	1	Q
-34A	NAS697A06L	NUTPLATE	2	R
	NAS697A04L	NUTPLATE	2	D
-35	S1862-2	NUTPLATE	1	
-36	CM2692-15-1S	PLUG BUTTON	1	C
-37	CM2692-12-1S	PLUG BUTTON	1	C
-37A	CM2692-12-1H	PLUG BUTTON	1	C
-38	AN837-2D	ELBOW MANIFOLD PRESSURE	1	E
-39	NAS557-4A	GROMMET	1	C
-40	S1095-2	SHIELD HALF	1	C
		ATTACHING PARTS		
	S1021Z8-8	SCREW	2	C
	NAS446-4-3	NUT	2	C
		---*---		
-41	CM2692-8-1H	PLUG BUTTON	1	S

CONTINUED ON NEXT PAGE

FIGURE AND INDEX NO.	PART NUMBER	DESCRIPTION 1 2 3 4 5 6 7	UNITS PER ASSY	USABLE ON CODE
33 -42	NAS697A3	NUTPLATE	2	L
-43	S1862-2A	NUTPLATE	1	F
-44	NAS680A08	NUTPLATE	9	F
-45	NAS680A3K	NUTPLATE	1	
-46	0753026-1	ADAPTOR-FIREWALL	1	P
-47	1653008-1	PAN-FIREWALL	1	P
-48	0753008-1	DOUBLER	1	F
	0753020-2	PLATE	1	G
-49	0450111	BRACKET-FUEL STRAINER	1	F
	0753020-1	ANGLE-FUEL STRAINER	1	G
		A---SERIAL 18051184 THRU 18051312		
		B---SERIAL 185-0001 THRU 185-0653		
		C---SERIAL 18051313 THRU 18052384		
		D---SERIAL 185-0654 THRU 18502310		
		E---SERIAL 18051313 THRU 18052384		
		SERIAL 185-0654 THRU 18502310		
		F---SERIAL 18051184 THRU 18051445		
		SERIAL 185-0001 THRU 185-0776		
		G---SERIAL 18051446 THRU 18052384		
		SERIAL 185-0777 THRU 18502310		
		H---SERIAL 18051313 THRU 18051607		
		J---SERIAL 185-0654 THRU 185-0967		
		K---SERIAL 18051313 THRU 18051607		
		SERIAL 185-0654 THRU 185-0967		
		L---SERIAL 18051608 THRU 18052384		
		M---SERIAL 185-0968 THRU 18502007,		
		18502026 THRU 18502027		
		N---SERIAL 18051608 THRU 18052384		
		SERIAL 185-0968 THRU 18502007,		
		18502026 THRU 18502027		
		P---SERIAL 18502008 THRU 18502025,		
		18502028 THRU 18502310		
		Q---SERIAL 185-0001 THRU 18502310		
		R---SERIAL 185-0001 THRU 185-0653		
		S---SERIAL 18051876 THRU 18052384		
		SERIAL 185-1301 THRU 18502310		

Fuselage (Cont)

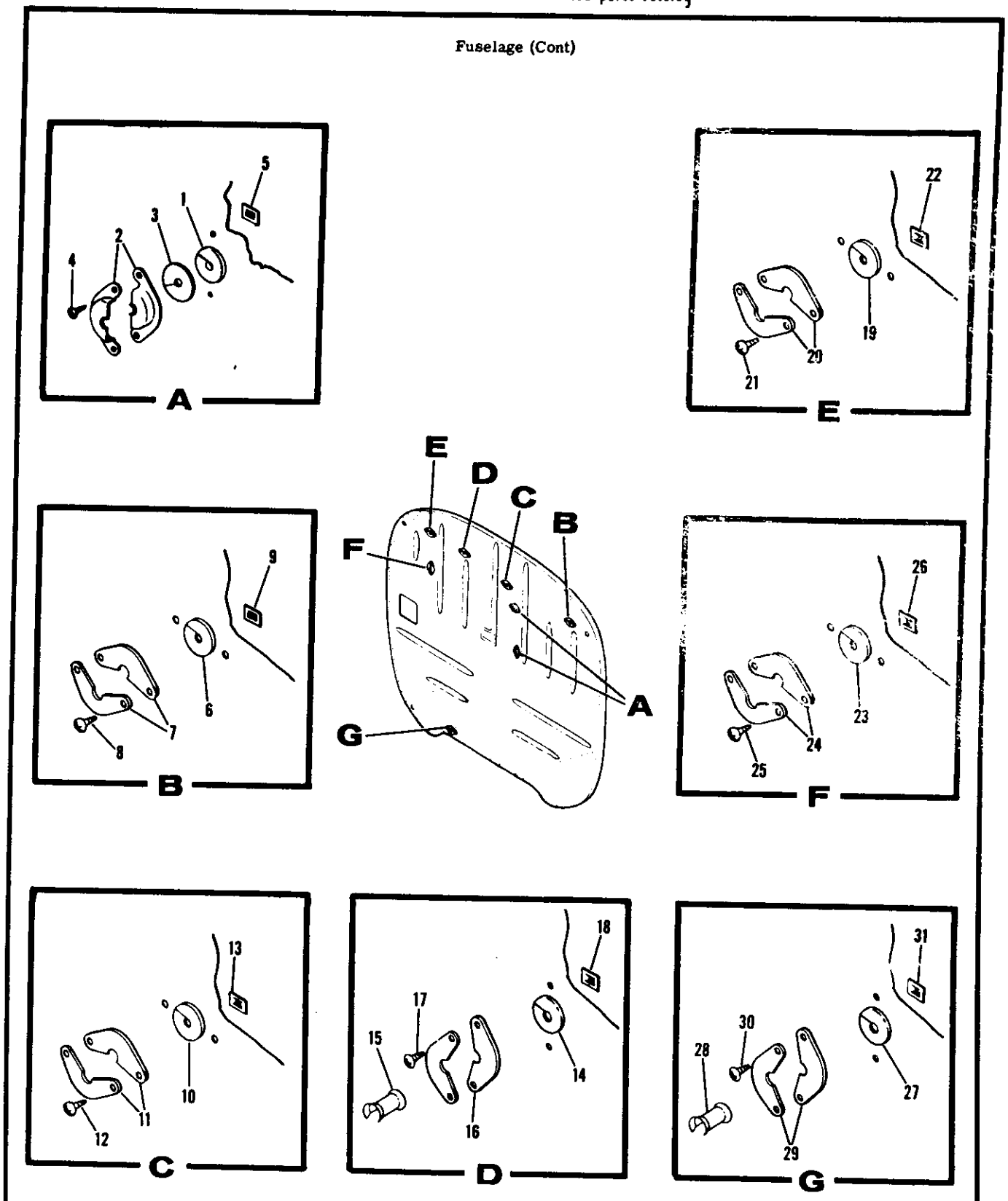

SERIAL 18051184 THRU 18051312

Figure 34. Firewall Grommets Installation

FIGURE AND INDEX NO.	PART NUMBER	DESCRIPTION 1 2 3 4 5 6 7	UNITS PER ASSY	USABLE ON CODE
34 -		GROMMETS INSTALLATION-FIREWALL	NP	A
- 1	MS35489-11	GROMMET PROPELLER & THROTTLE CONTROL	2	
- 2	S352	SHEILD-FIREWALL HOLE	2	
- 3	S354-1	GROMMET-ASBESTOS	2	
		ATTACHING PARTS		
- 4	S1021Z8-6	SCREW	2	
- 5	NAS446-4-3	NUT	2	
		---*---		
- 6	NAS557-8A	GROMMET VOLTAGE REGULATOR LEAD	1	
- 7	S1095-4	SHIELD HALF	2	
		ATTACHING PARTS		
- 8	S1021Z8-8	SCREW	2	
- 9	NAS446-4-3	NUT	2	
		---*---		
-10	NAS557-6A	GROMMET MAGNETO LEADS	1	
-11	S1095-3	SHIELD HALF	2	
		ATTACHING PARTS		
-12	S1021Z8-8	SCREW	2	
-13	NAS446-4-3	NUT	2	
		---*---		
-14	NAS557-4A	GROMMET OIL TEMPERATURE LINE	1	
-15	0753003-1	BUSHING	1	
-16	S1095-2	SHIELD HALF	2	
		ATTACHING PARTS		
-17	S1021Z8-6	SCREW	2	
-18	NAS446-4-3	NUT	2	
		---*---		
-19	NAS557-6A	GROMMET THERMOCOUPLE & STARTER RELAY LEADS	1	
-20	S1095-3	SHIELD HALF	2	
		ATTACHING PARTS		
-21	S1021Z8-8	SCREW	2	
-22	NAS446-4-3	NUT	2	
		---*---		
-23	NAS557-4A	GROMMET TACHOMETER	1	
-24	S1095-2	SHIELD HALF	2	
		ATTACHING PARTS		
-25	S1021Z8-6	SCREW	2	
-26	NAS446-4-3	NUT	2	
		---*---		
-27	NAS557-8A	GROMMET BATTERY CABLE	1	
-28	0713003-74	FAIRLEAD	1	
-29	S1095-4	SHIELD HALF	2	
		ATTACHING PARTS		
-30	S1021Z8-8	SCREW	2	
-31	NAS446-4-3	NUT	2	
		---*---		
		A---SERIAL 18051184 THRU 18051312		

Fuselage (Cont)

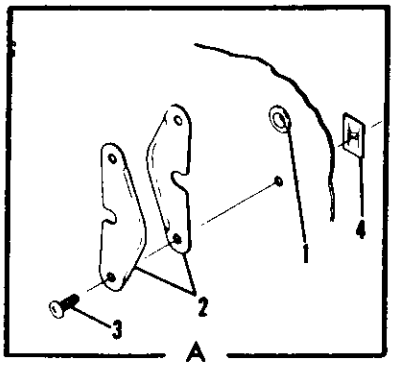

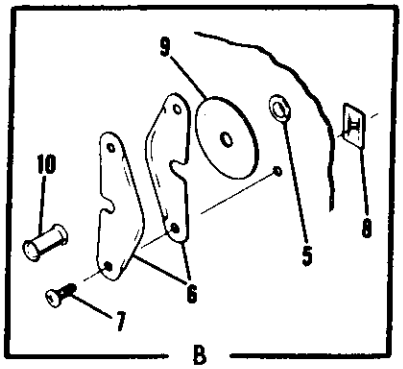

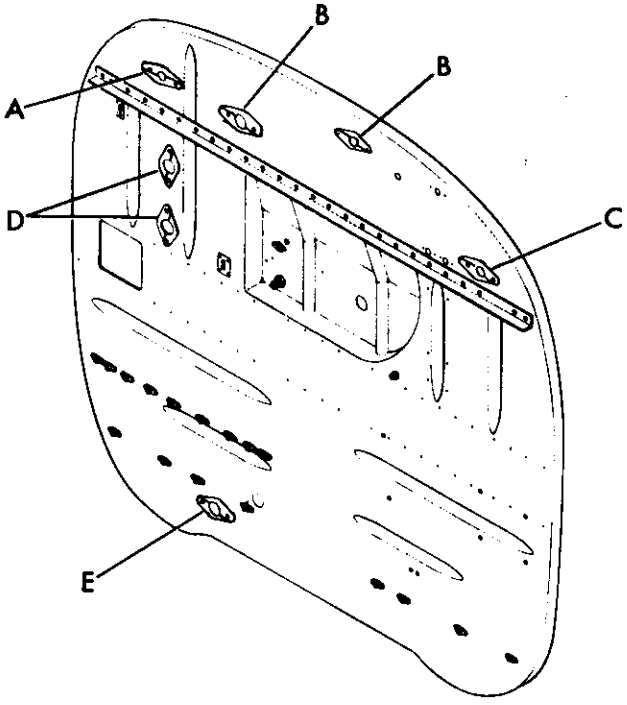

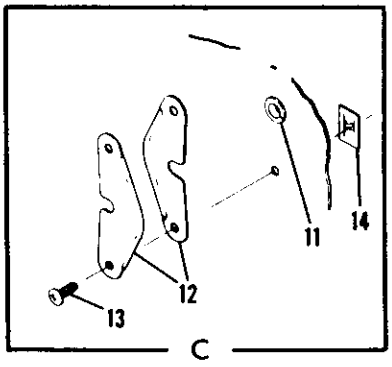

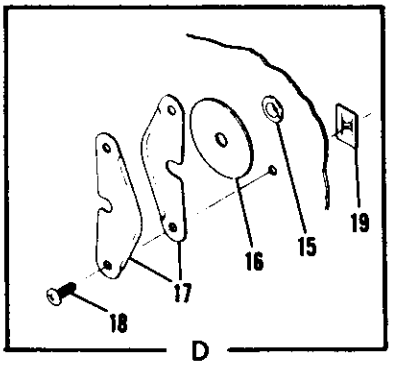

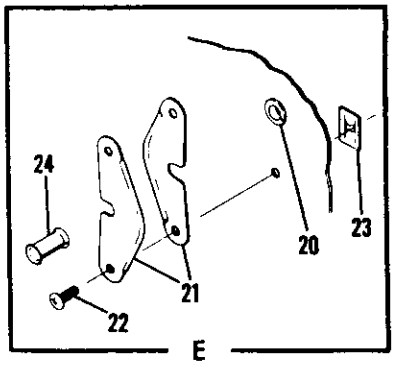

SERIAL 185-0001 THRU 18502310
SERIAL 18051313 THRU 18052384

Figure 34A. Firewall Grommets Installation

FIGURE AND INDEX NO.	PART NUMBER	DESCRIPTION 1 2 3 4 5 6 7	UNITS PER ASSY	USABLE ON CODE
34A-		GROMMETS INSTALLATION-FIREWALL	NP	A
- 1	NAS557-6A	GROMMET	1	
- 2	S1095-3	SHIELD HALF	2	
		ATTACHING PARTS		
- 3	S1021Z8-8	SCREW	1	
- 4	NAS446-4-3	NUT	1	
		---*---		
- 5	NAS557-4A	GROMMET	2	
- 6	S1095-2	SHIELD HALF	4	
		ATTACHING PARTS		
- 7	S1021Z8-8	SCREW	1	
- 8	NAS446-4-3	NUT	1	
		---*---		
- 9	S354-5	GROMMET-ASBESTOS	2	
-10	0753003-1	BUSHING	2	
-11	NAS557-12A	GROMMET	1	
-12	S1095-6	SHIELD HALF	2	
		ATTACHING PARTS		
-13	S1021Z8-8	SCREW	1	
-14	NAS446-4-3	NUT	1	
		---*---		
-15	NAS557-4A	GROMMET	1	
-16	S354-5	GROMMET-ASBESTOS	1	
-17	S1095-2	SHIELD HALF	2	
		ATTACHING PARTS		
-18	S1021Z8-8	SCREW	1	
-19	NAS446-4-3	NUT	1	
		---*---		
-20	NAS557-8A	GROMMET	1	
-21	S1095-4	SHIELD HALF	2	
		ATTACHING PARTS		
-22	S1021Z8-8	SCREW	1	
-23	NAS446-4-3	NUT	1	
		---*---		
-24	0713003-74	FAIRLEAD	1	
		A---SERIAL 18051313 THRU 18052384		
		SERIAL 185-0001 THRU 18502310		

Fuselage (Cont)

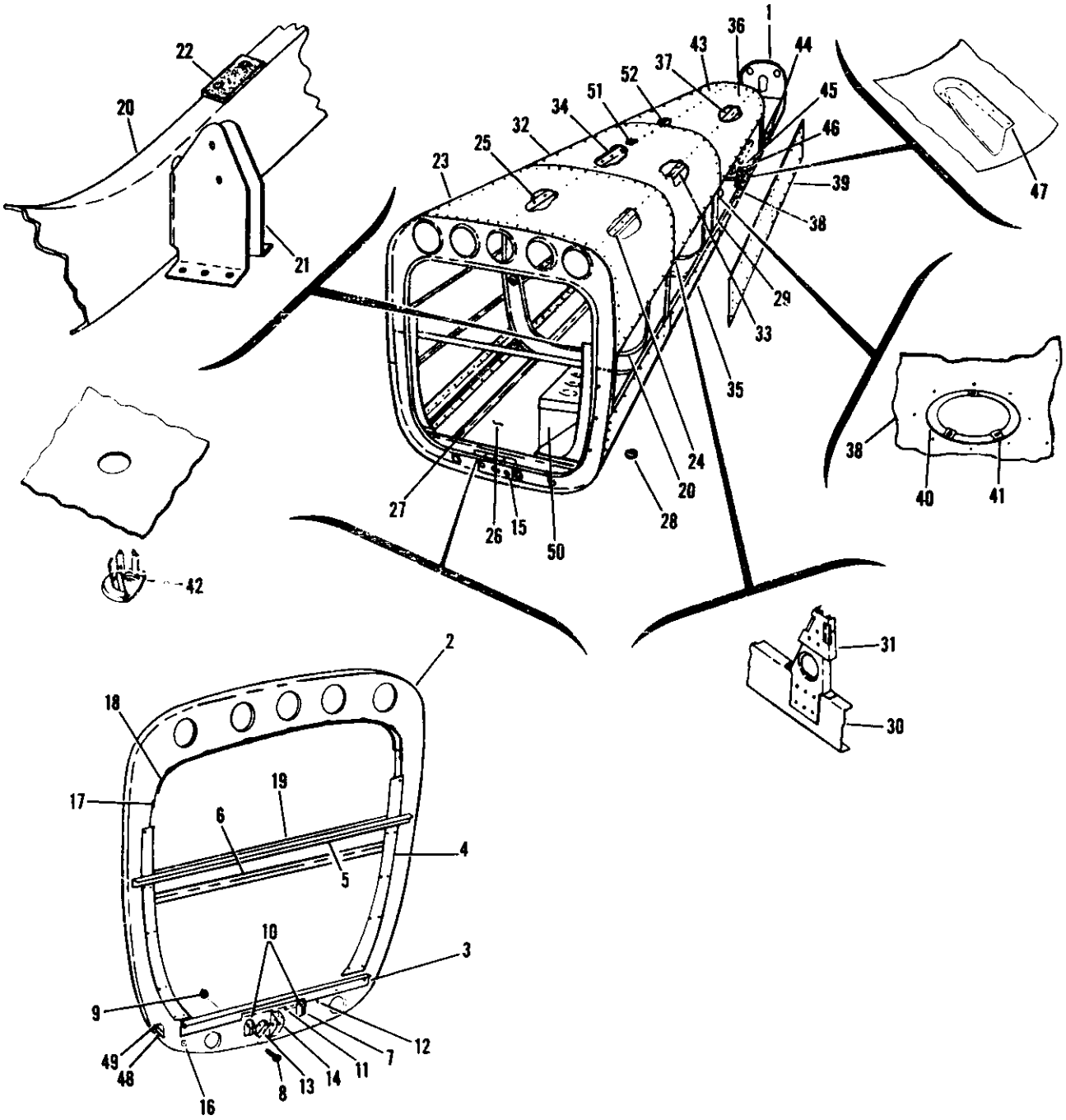

SERIAL 185-0001 THRU 185-1149
SERIAL 18051184 THRU 18051774

Figure 35. Fuselage Aft Section Assembly

FIGURE AND INDEX NO.	PART NUMBER	DESCRIPTION 1 2 3 4 5 6 7	UNITS PER ASSY	USABLE ON CODE
35 -	0791200-8	AFT SECTION ASSEMBLY-FUSELAGE	1	E
- 1	0791200-7	TAILCONE ASSEMBLY-FUSELAGE AFT SECTION SEE FIGURE 38	1	
	0711100-12	BULKHEAD ASSEMBLY-FUSELAGE AFT SECTION STA 108.00	1	
- 2	0711100-11	BULKHEAD-FUSELAGE AFT SECTION STA 108.00	1	
- 3	0511149-1	RETAINER-INTERIOR TRIM LOWER	1	
- 4	0512121-6	PLATE-INTERIOR TRIM SIDE	2	
- 5	0512148	ANGLE-BAGGAGE SHELF	1	
	0712004-1	STIFFENER	1	
- 6	0710011-1	ANGLE-SEAT BACK SUPPORT	1	
- 7	0512160-2	BRACKET-RUDDER CABLE PULLEY	2	
		ATTACHING PARTS		
- 8	NAS221-6	SCREW	2	
- 9	MS21044N3	NUT	2	
		---*---		
-10	S378-3L	PULLEY-RUDDER CABLE	2	
		ATTACHING PARTS		
-11	AN4-10A	BOLT	2	
-12	NAS679A4	NUT	2	
		---*---		
-13	0412467	BRACKET-STABILIZER TRIM CABLE PULLEY	1	
-14	0510164	BRACKET-ELEVATOR CABLE PULLEY	1	
-15	0710009-1	REINFORCEMENT-BULKHEAD	1	
-16	MS35489-14	GROMMET	1	
-17	0711117-1	CLIP-UPHOLSTERY	12	
-18	S202RB	MOULDING-40.38 IN. LG BULK ITEM REF S-202R40.38B	AR	
-19	0511145	SUPPORT ASSEMBLY-INTERIOR TRIM	1	F
	0712201-5	BULKHEAD ASSEMBLY-FUSELAGE AFT SECTION STA 140.00	1	
-20	0712201-4	BULKHEAD-FUSELAGE AFT SECTION STA 140.00	1	
	0712005-1	STIFFENER	1	
-21	0712209	BRACKET-RUDDER CABLE PULLEY	1	
-22	0712201-2	RUB STRIP	1	
-23	0712000-31	SKIN-FUSELAGE AFT SECTION UPPER STA 108.00 TO 140.00	1	
-24	0712007-1	STIFFENER-UPPER SKIN	1	
-25	0712007-4	STIFFENER-UPPER SKIN	2	
-26	0712000-34	SKIN-FUSELAGE AFT SECTION LOWER STA 108.00 TO 140.00	1	
-27	0712015-2	ANGLE-STIFFENER RH	1	
	0712015-1	ANGLE-STIFFENER LH	1	
-28	MS35489-14	GROMMET	1	
	MS35489-11	GROMMET	1	
-29	0712202-5	BULKHEAD ASSEMBLY-FUSELAGE AFT SECTION STA 172.00	1	
-30	0712202-4	BULKHEAD-FUSELAGE AFT SECTION STA 172.00	1	
	0712006-1	STIFFENER AFT SIDE OF BULKHEAD	1	
	0712006-2	STIFFENER FWD SIDE OF BULKHEAD	1	
-31	0712212	BRACKET-RUDDER CABLE PULLEY	1	
-32	0712000-32	SKIN-FUSELAGE AFT SECTION UPPER STA 140.00 TO 172.00	1	

CONTINUED ON NEXT PAGE

FIGURE AND INDEX NO.	PART NUMBER	DESCRIPTION 1 2 3 4 5 6 7	UNITS PER ASSY	USABLE ON CODE
35 -33	0712007-5	STIFFENER-UPPER SKIN	1	
-34	0712007-6	STIFFENER-UPPER SKIN	1	C
	0712007-7	STIFFENER-UPPER SKIN	1	D
-35	0712000-35	SKIN-FUSELAGE AFT SECTION LOWER STA 140.00 TO 172.00	1	
-36	0712000-38	SKIN-FUSELAGE AFT SECTION UPPER STA 172.00 TO 209.00	1	
	0712309-11	FAIRING-RH	1	
	0712309-12	FAIRING-LH	1	
-37	0712007-3	STIFFENER-UPPER SKIN LH	1	
	0712007-2	STIFFENER-UPPER SKIN RH	1	
-38	0712000-36	SKIN-FUSELAGE AFT SECTION LOWER STA 172.00 TO 209.00	1	
-39	0712000-2	PLATE-FUSELAGE SPLICE STA 140.00 TO 209.00	2	
-40	S226-5	DOUBLER-ACCESS OPENING	1	
-41	S1860-2A	NUTPLATE	6	
-42	S349	SCOOP-DRAIN	7	
-43	NAS680A08	NUTPLATE	6	
-44	0712303-1	GUIDE-STABILIZER SEAL LH	1	
	0712303-2	GUIDE-STABILIZER SEAL RH	1	
-45	0712309-5	BRACKET-PULLEY INBOARD LH SEE FIGURE 98	1	
	0712309-6	BRACKET-PULLEY INBOARD RH SEE FIGURE 98	1	
-46	0712309-7	BRACKET-PULLEY OUTBOARD LH SEE FIGURE 98	1	
	0712309-8	BRACKET-PULLEY OUTBOARD RH SEE FIGURE 98	1	
-47	0712309-9	FAIRING-TAILWHEEL STEERING CABLE LH	1	
	0712309-10	FAIRING-TAILWHEEL STEERING CABLE RH	1	
-48	0712008-1	BRACKET-SEAT BELT LUG	2	
-49	0712009-1	SPACER-LUG BRACKET	2	
-50	SEE FIG 37	BOX INSTALLATION-BATTERY	NP	
-51	0712002-1	FITTING-DORSAL FORWARD	1	A
	0712304-1	FITTING-DORSAL FORWARD	1	B
	NAS395-6-3	NUTPLATE	2	
-52	0712001-1	FITTING-DORSAL AFT	1	A
	0712304-12	FITTING-DORSAL AFT	1	B
	NAS395-18-3	NUTPLATE	2	

A---SERIAL 185-0001 THRU 185-1149
B---SERIAL 18051184 THRU 18051774
C---SERIAL 185-0001 THRU 185-0791
SERIAL 18051184 THRU 18051483
D---SERIAL 185-0792 THRU 185-1149
SERIAL 18051484 THRU 18051774
E---SERIAL 185-0001 THRU 185-1149
SERIAL 18051184 THRU 18051774
F---SERIAL 18051184 THRU 18051312

Fuselage (Cont)

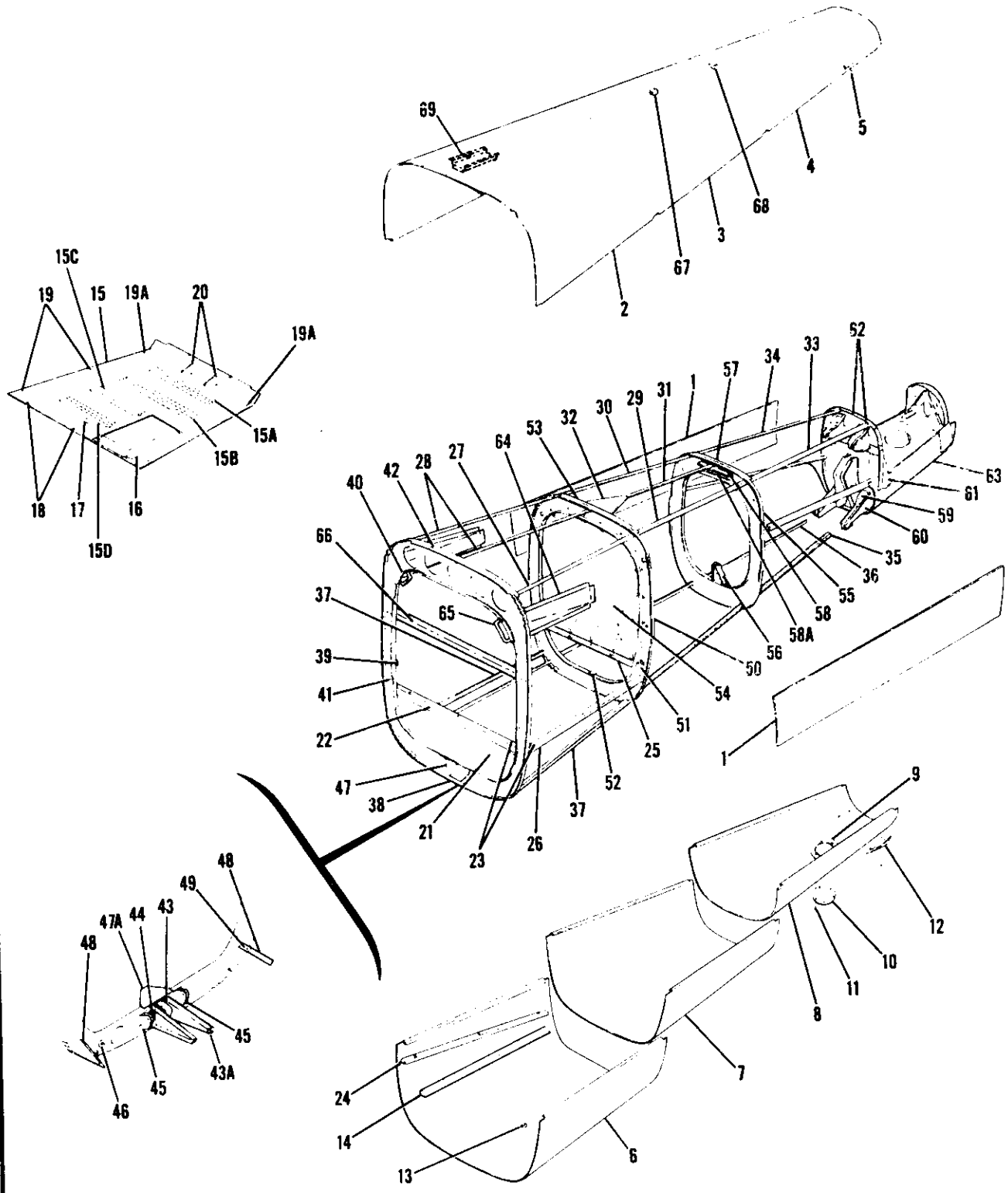

SERIAL 185-1150 THRU 18502310
SERIAL 18051775 THRU 18052384

Figure 35A. Fuselage Aft Section Assembly

FIGURE AND INDEX NO.	PART NUMBER		DESCRIPTION 1 2 3 4 5 6 7	UNITS PER ASSY	USABLE ON CODE
35A-	0791200-10	*	AFT SECTION ASSEMBLY-FUSELAGE	1	G
		*	AFT SECTION ASSEMBLY-FUSELAGE	NP	H
	0791200-11		AFT SECTION ASSEMBLY-FUSELAGE	1	J
			AFT SECTION ASSEMBLY-FUSELAGE	NP	K
- 1	0712000-2		PLATE-FUSELAGE SPLICE STA 140.00 TO 209.00	2	
- 2	0712000-31	*	SKIN-UPPER STA 108.00 TO 140.00	1	A
- 3	0712000-32		SKIN-UPPER STA 140.00 TO 172.00	1	
- 4	0712000-38		SKIN-UPPER STA 172.00 TO 209.00	1	
- 5	0712309-12		FAIRING-LH	1	
	0712309-11		FAIRING-RH	1	
- 6	0712000-34	*	SKIN-LOWER STA 108.00 TO 140.00	1	A
- 7	0712000-35		SKIN-LOWER STA 140.00 TO 172.00	1	
- 8	0712000-36		SKIN-LOWER STA 172.00 TO 209.00	1	
- 9	S226-5		DOUBLER ASSEMBLY	1	
	S1860-2A		NUTPLATE	6	
-10	S225-4		PLATE-INSPECTION	1	
			ATTACHING PARTS		
-11	S1021Z8-8		SCREW	6	
			---*---		
-12	0712309-9		FAIRING-TAILWHEEL STEERING CABLE LH	1	
	0712309-10		FAIRING-TAILWHEEL STEERING CABLE RH	1	
-13	MS35489-14		GROMMET	1	
-14	0770712-1		ANGLE-RADIO RACK	1	
-15	0712660-2		PAN ASSEMBLY-FLOOR WHEN EXHAUSTED USE 0712660-10	1	E
	0712660-10		PAN ASSEMBLY-FLOOR	1	F
-15A	0712663-1		STIFFENER	1	F
-15B	0712663-2		STIFFENER	1	F
-15C	0712663-3		STIFFENER	1	F
-15D	0712663-4		STIFFENER	1	F
-16	0712661-1		SHIELD-BATTERY	1	
-17	0712662-1		PLACARD	1	
-18	S1115-14		STUD	5	
	S1115-9		RING	5	
-19	S1115-11		STUD	6	
	S1115-9		RING	6	
-19A	S1115-15		STUD	2	
	S1115-9		RING	2	
-20	0712658-1		SHIELD-CABLE	2	
-21	0712660-4		PLATE-STA 108.00	1	
-22	0712013-22		ANGLE-FLOOR SUPPORT STA 108.00	1	
-23	S1115-19		RECEPTACLE	8	
-24	0712660-6		ANGLE ASSEMBLY-FLOOR SUPPORT RH	1	
	S1115-19		RECEPTACLE	3	
-25	0712659-1		SUPPORT ASSEMBLY-FLOORBOARD STA 140.00	1	
	S1115-19		RECEPTACLE	2	
-26	0712013-51		SUPPORT-FLOORBOARD LH	1	
-27	0712007-1		STIFFENER-UPPER LH	1	
-28	0712007-4		STIFFENER-UPPER CENTER & RH	2	
-29	0712007-5		STIFFENER-UPPER LH	1	
-30	0712007-6		STIFFENER-UPPER RH	1	
-31	0712007-7		STIFFENER-UPPER CENTER	1	
-32	0712016-1		GUSSET	1	
-33	0712007-2		STIFFENER-UPPER LH	1	
-34	0712007-3		STIFFENER-UPPER RH	1	
-35	0712015-1		ANGLE-LOWER LH	1	
-36	0712015-2		ANGLE-LOWER RH	1	
-37	0712000-13		ANGLE-LOWER	2	
	0711100-16	*	BULKHEAD ASSEMBLY-FUSELAGE AFT SECTION STA 108.00	1	G
	0711100-19	*	BULKHEAD ASSEMBLY-FUSELAGE AFT SECTION STA 108.00	1	H
	0711100-14		BULKHEAD ASSEMBLY-FUSELAGE AFT SECTION STA 108.00	1	J
	0711100-20		BULKHEAD ASSEMBLY-FUSELAGE AFT SECTION STA 108.00	1	K
-38	0711100-17	*	BULKHEAD-STA 108.00	1	G
	0711100-18	*	BULKHEAD-STA 108.00	1	H
	0711100-15		BULKHEAD-STA 108.00	1	J
	0711100-21		BULKHEAD-STA 108.00	1	K
-39	0711704-1		TAB	1	
-40	S202VW		MOULDING-40.38 IN LG BULK ITEM REF S202V40.38W	1	
-41	NAS680A3		NUTPLATE	2	
-42	0712004-1		STIFFENER	1	
-43	0510164		BRACKET-ELEVATOR CABLE PULLEY	1	
-43A	0711794-1		SUPPORT-SHEAR PLATE	1	H
-44	0412467		BRACKET-STABILIZER TRIM CABLE PULLEY	1	

CONTINUED ON NEXT PAGE

FIGURE AND INDEX NO.	PART NUMBER	DESCRIPTION 1 2 3 4 5 6 7	UNITS PER ASSY	USABLE ON CODE
35A-45	0512160-2	BRACKET-RUDDER CABLE PULLEY	2	
		ATTACHING PARTS		
	NAS221-6	SCREW	2	
	MS21044N3	NUT	2	
		---*---		
-46	MS35489-14	GROMMET	1	
-47	0710009-1	REINFORCEMENT PLATE-BULKHEAD	1	G
	0710009-3	REINFORCEMENT PLATE ASSEMBLY-BULKHEAD	1	H
	NAS696A4	NUTPLATE	2	H
-47	0711795-1	SHEAR PLATE	1	H
-48	0712008-1	BRACKET-SEAT BELT LUG	2	G
	0712008-2	BRACKET-SEAT BELT LUG	2	H
-49	0712009-1	SPACER-LUG BRACKET	2	
	0712201-5	BULKHEAD ASSEMBLY-STA 140.00	1	
-50	0712201-4	BULKHEAD-STA 140.00	1	
-51	NAS680A3	NUTPLATE	2	
-52	0712201-2	RUB STRIP	1	
-53	0712005-1	STIFFENER	1	
-54	071266C-8	PANEL ASSEMBLY-STA 140.00	1	
		ATTACHING PARTS		
	AN227-8B	STUD	21	
	AN227-9B	EYELET	21	
		---*---		
	AN227-6B	BUTTON	21	
	AN227-7B	SOCKET	21	
	0712202-5	BULKHEAD ASSEMBLY-STA 172.00	1	M
	0712202-7	BULKHEAD ASSEMBLY-STA 172.00	1	N
-55	0712202-4	BULKHEAD-STA 172.00	1	
-56	0712212	BRACKET-RUDDER CABLE PULLEY	1	
-57	0712006-1	STIFFENER	1	
-58	0712006-2	STIFFENER	1	
-58A	0710010-16	ANGLE	1	N
-59	0712309-5	BRACKET-PULLEY INBOARD LH SEE FIGURE 98	1	
	0712309-6	BRACKET-PULLEY INBOARD RH SEE FIGURE 98	1	
-60	0712309-7	BRACKET-PULLEY OUTBOARD LH SEE FIGURE 98	1	
	0712309-8	BRACKET-PULLEY OUTBOARD RH SEE FIGURE 98	1	
-61	0712303-1	GUIDE-STABILIZER SEAL LH	1	
	0712303-2	GUIDE-STABILIZER SEAL RH	1	
-62	NAS680A08	NUTPLATE	6	
-63	0791200-7	TAILCONE ASSEMBLY-FUSELAGE SEE FIGURE 38	1	
	0712010-2	BATTERY BOX ASSEMBLY SEE FIGURE 37	1	
		LITTER DOOR INSTALLATION SEE FIGURE 35B	1	B
-64	0712760-1	BRACKET ASSEMBLY-SHOULDER HARNESS ATTACH LH	1	H
	0712760-2	BRACKET ASSEMBLY-SHOULDER HARNESS ATTACH RH	1	H
	NAS698A4	NUTPLATE	1	H
-65	0712762-1	SUPPORT-LH	1	H
	0712762-2	SUPPORT-RH	1	H

CONTINUED ON NEXT PAGE

FIGURE AND INDEX NO.	PART NUMBER	DESCRIPTION 1 2 3 4 5 6 7	UNITS PER ASSY	USABLE ON CODE
35A-66	0710031-4	SUPPORT ASSEMBLY-BAGGAGE SHELF	1	
-67	0712002-1	FITTING-DORSAL FORWARD	1	C
	0712304-1	FITTING-DORSAL FORWARD	1	D
	NAS395-6-3	NUT	2	
-68	0712001-1	FITTING-DORSAL AFT	1	C
	0712304-12	FITTING-DORSAL AFT	1	D
	NAS395-18-3	NUT	2	
-69	1260474-1	BRACKET-EMERGENCEY LOCATOR TRANSMITTER	1	L

NOTE. *THESE PARTS ARE NOT USED ON AIRCRAFT EQUIPPED WITH LITTER DOOR INSTALLATION.

A---SERIAL 185-1150 THRU 18502310
SERIAL 18051775 THRU 18052384
B---SERIAL 185-1150 THRU 18502310-LITTER DOOR ONLY
SERIAL 18051775 THRU 18052384-LITTER DOOR ONLY
C---SERIAL 185-1150 THRU 18502310
D---SERIAL 18051775 THRU 18052384
E---SERIAL 185-1150 THRU 185-1526
SERIAL 18051775 THRU 18052064
F---SERIAL 185-1527 THRU 18502310
SERIAL 18052065 THRU 18052384
G---SERIAL 185-1150 THRU 18501832
SERIAL 18051775 THRU 18052175
H---SERIAL 18501833 THRU 18502310
SERIAL 18052176 THRU 18052384
J---SERIAL 185-1150 THRU 18501832-LITTER DOOR ONLY
SERIAL 18051775 THRU 18052175-LITTER DOOR ONLY
K---SERIAL 18501833 THRU 18502310-LITTER DOOR ONLY
SERIAL 18052176 THRU 18052384-LITTER DOOR ONLY
L---SERIAL 18501935 THRU 18502310
SERIAL 18052231 THRU 18052384
M---SERIAL 185-1150 THRU 18502139
SERIAL 18051175 THRU 18052309
N---SERIAL 18502140 THRU 18502310
SERIAL 18052310 THRU 18052384

Fuselage (Cont)

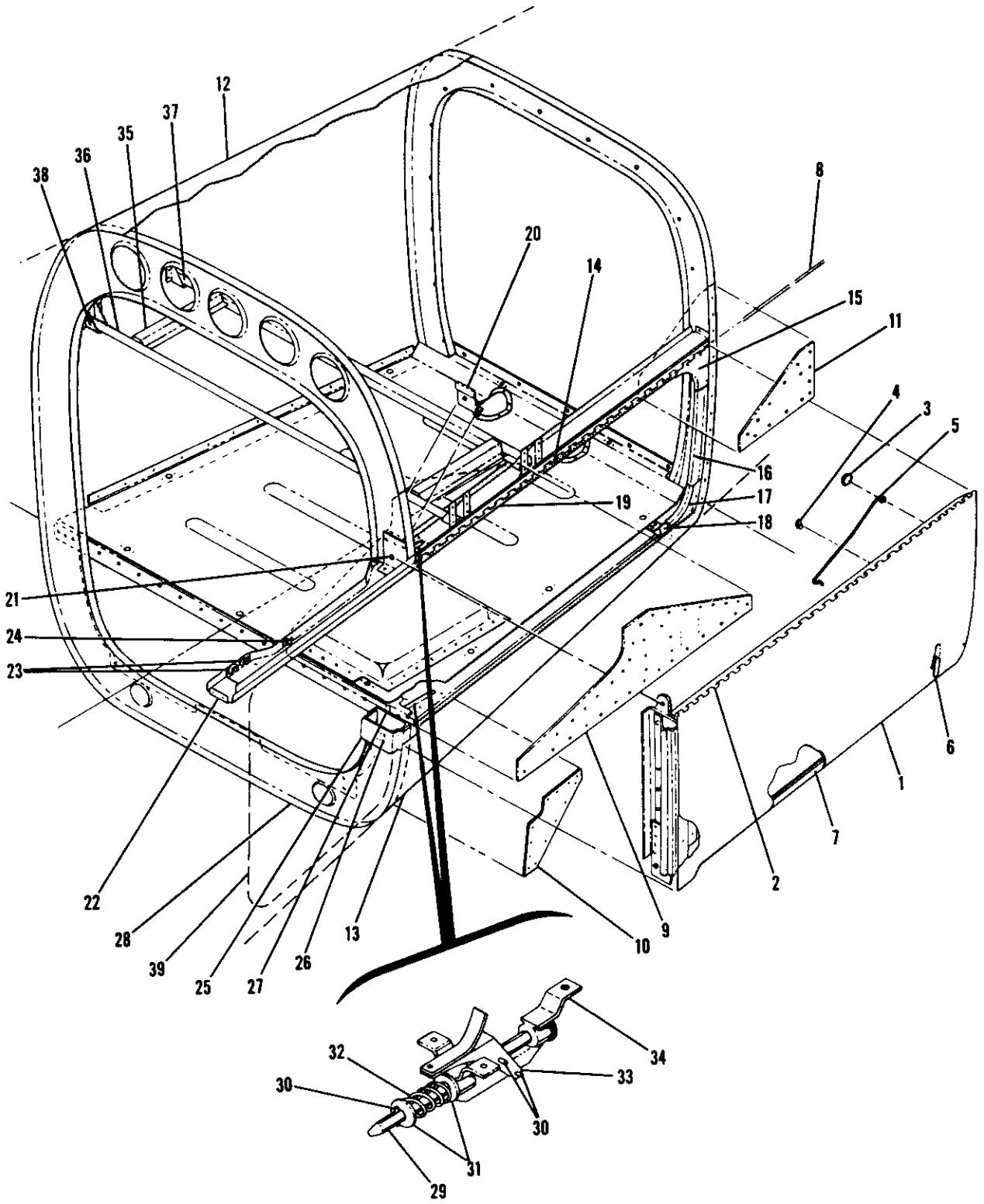

SERIAL 185-1150 THRU 18502310
SERIAL 18051775 THRU 18052384

Figure 35B. Litter Door Components Installation

FIGURE AND INDEX NO.	PART NUMBER	DESCRIPTION 1 2 3 4 5 6 7	UNITS PER ASSY	USABLE ON CODE
358-		LITTER DOOR COMPONENTS INSTALLATION	NP	A
- 1	0712013-10	DOOR ASSEMBLY-LITTER	1	
- 2	0712013-37	HINGE HALF	1	
- 3	CM2692-16-25	PLUG BUTTON	1	
- 4	C23150-017-4	CLIP TIN	1	
- 5	0712022-1	SUPPORT ASSEMBLY-LITTER DOOR	1	
- 6	0712013-27	LATCH ASSEMBLY-DOOR	1	
- 7	S1441-1	SEAL-* IN LG BULK ITEM REF S1441-1-*	1	
- 8	MS20253-2-3115	PIN-HINGE	1	
- 9	0712013-26	DOUBLER-UPPER STA 108.00	1	
-10	0712013-23	DOUBLER-LOWER STA 108.00	1	
-11	0712013-25	DOUBLER-UPPER STA 140.00	1	
-12	0712013-28	SKIN-UPPER	1	
-13	0712013-29	SKIN-LOWER	1	
-14	0712013-38	HINGE HALF	1	
-15	0712013-31	GUSSET-DOOR JAMB UPPER	1	
-16	0712013-9	JAMB ASSEMBLY-DOOR STA 140.00	1	
-17	0712013-30	GUSSET-DOOR JAMB LOWER	1	
-18	0311319-1	PLATE-STRIKE	1	
		ATTACHING PARTS		
	AN520-10R7	SCREW	2	
	0311319-2	SHIM-STRIKE PLATE	AR	
	MS21044N3	NUT	2	
		---*---		
-19	S1047-1	SEAL-42.0 IN LG BULK ITEM REF S1047-1-42.00	1	
-20	0712013-20	DOUBLER-STA 108.00	1	
-21	0712026-1	DOUBLER-STA 108.00	1	
-22	0712013-18	SUPPORT ASSEMBLY-UPPER	1	
-23	NAS680A08	NUTPLATE	2	B
	NAS680A3	NUTPLATE	2	C
-24	S1863-3	NUTPLATE	1	
-25	0712020-1	ANGLE-STRIKER PLATE	1	
-26	NAS696A3	NUTPLATE	2	
-27	0712013-24	BRACE	1	
-28	0711100-14	BULKHEAD ASSEMBLY-STA 108.00 SEE FIGURE 35A	1	D
	0711100-20	BULKHEAD ASSEMBLY-STA 108.00 SEE FIGURE 35A	1	E
	0712027-1	LATCH ASSEMBLY-LITTER DOOR	2	
-29	0712013-3	LOCKPIN	1	
-30	NAS561-3-10	PIN	3	
-31	AN960-416	WASHER	2	
-32	0742130-1	SPRING	1	
-33	0712030-1	HANDLE	1	
-34	0712028-1	GUIDE ASSEMBLY	1	
-35	0712013-36	SUPPORT-RADIO	2	
-36	0712013-34	ANGLE-RADIO SUPPORT FORWARD	1	F
	0712013-49	ANGLE-RADIO SUPPORT FORWARD	1	G
-37	0712013-35	ANGLE-RADIO SUPPORT AFT	1	F
	0712013-50	ANGLE-RADIO SUPPORT AFT	1	G
-38	0712013-33	BRACKET-RADIO SUPPORT	4	
-39	SEE FIG 52	BAGGAGE DOOR INSTALLATION	NP	

NOTE. FOR PARTS SHOWN BUT NOT CALLED OUT ON THIS FIGURE SEE FIGURE 35A.

NOTE. *LENGTH TO BE DETERMINED LATER

A---SERIAL 185-1150 THRU 18502310
SERIAL 18051775 THRU 18052384
B---SERIAL 185-1150 THRU 18501823
SERIAL 18051775 THRU 18052173
C---SERIAL 18501824 THRU 18502310
SERIAL 18052174 THRU 18052384
D---SERIAL 185-1150 THRU 18501832
SERIAL 18051775 THRU 18052175
E---SERIAL 18501833 THRU 18502310
SERIAL 18052176 THRU 18052384
F---SERIAL 185-1150 THRU 18502100
SERIAL 18051775 THRU 18052293
G---SERIAL 18502101 THRU 18502310
SERIAL 18052294 THRU 18052384

Fuselage (Cont)

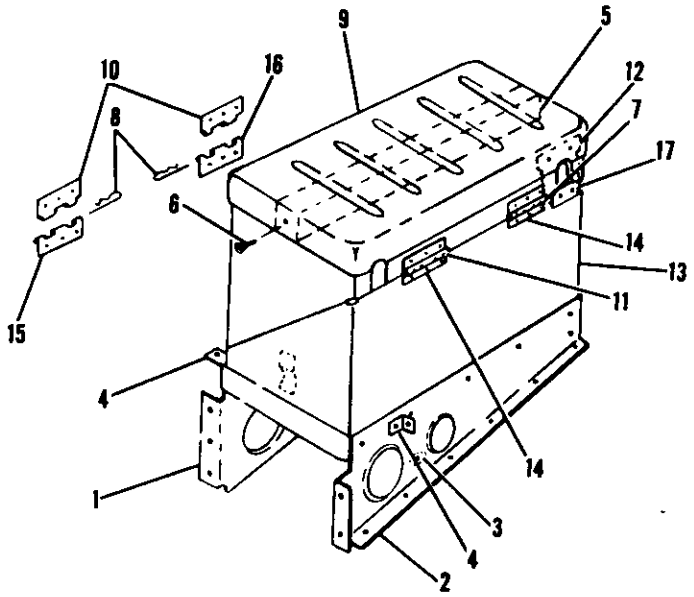

SERIAL 185-0001 THRU 185-0363 & 185-0389

Figure 36. Battery Box Assembly

FIGURE AND INDEX NO.	PART NUMBER	DESCRIPTION 1 2 3 4 5 6 7	UNITS PER ASSY	USABLE ON CODE
36 -	0712601	BOX ASSEMBLY-BATTERY	1	A
- 1	0712601-2	BRACKET-MOUNTING WHEN EXHAUSTED USE 0712601-6	1	
	0712601-6	BRACKET-MOUNTING	1	
- 2	0712601-3	BRACKET ASSEMBLY-MOUNTING WHEN EXHAUSTED USE 0712601-8	1	
	0712601-8	BRACKET ASSEMBLY-MOUNTING	1	
- 3	NAS680A4	NUTPLATE	1	
- 4	0712601-4	BRACKET-CABLE SUPPORT	2	
- 5	0413279	SPACER	1	
		ATTACHING PARTS		
- 6	0712010-3	TUBE-DRAIN	1	
		---*---		
	0412146-1	BOX ASSEMBLY-BATTERY	1	
- 7	0412151-5	PIN-HINGE	2	
- 8	AN415-2	PIN-LOCK	2	
- 9	0412147	BOX ASSEMBLY-UPPER	1	
-10	0412151-1	HINGE HALF-LOWER	2	
-11	0412151-4	HINGE HALF-UPPER	2	
-12	0412470	INSULATOR	2	
-13	0412148-1	BOX ASSEMBLY-LOWER	1	
-14	0412151-1	HINGE HALF-UPPER	2	
-15	0412151-2	HINGE HALF-LOWER RH	1	
-16	0412151-3	HINGE HALF-LOWER LH	1	
-17	0412471-3	INSULATOR	2	
	NAS397-8	CLAMP TIN	1	
	S1071-4	TUBE-6.50 IN LG BULK ITEM REF S1071-4-6.50	1	
		A---SERIAL 185-0001 THRU 185-0363 & 185-0389		

Fuselage (Cont)

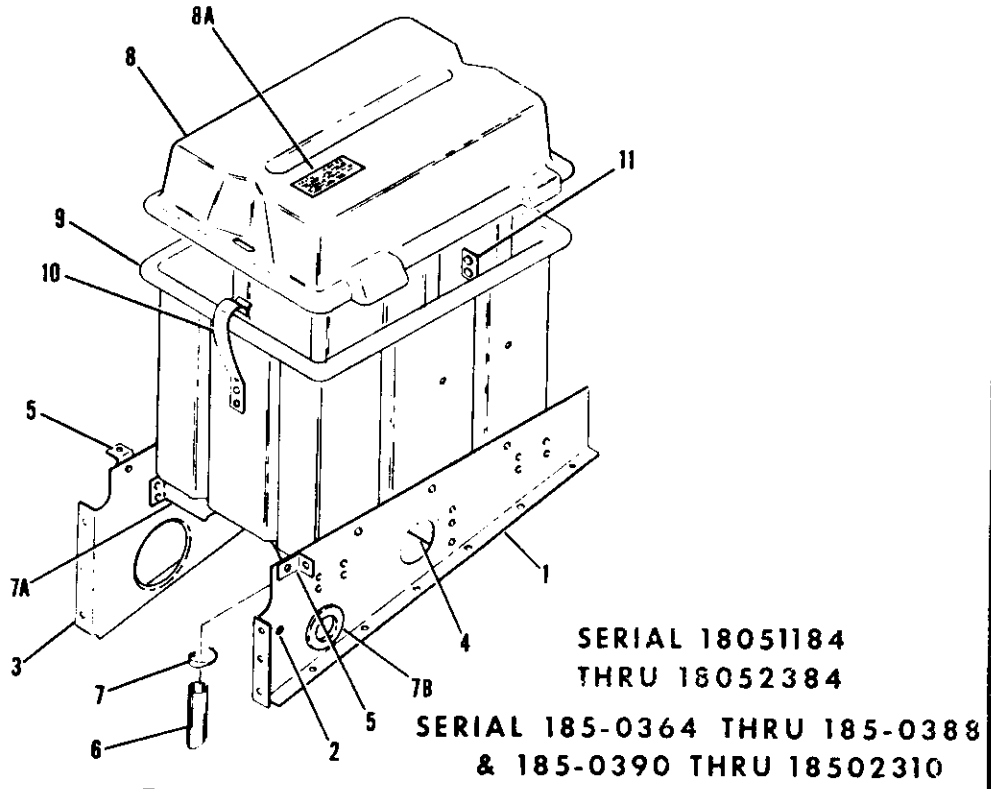

Figure 37. Battery Box Assembly

FIGURE AND INDEX NO.	PART NUMBER	DESCRIPTION 1 2 3 4 5 6 7	UNITS PER ASSY	USABLE ON CODE
37 -	0712010-1	BOX ASSEMBLY-BATTERY WHEN EXHAUSTED USE 0712010-2	1	A
	0712010-2	BOX ASSEMBLY-BATTERY	1	B
- 1	0712601-3	BRACKET ASSEMBLY WHEN EXHAUSTED USE 0712601-8	1	A
	0712601-8	BRACKET ASSEMBLY	1	B
- 2	NAS680A4K	NUTPLATE	1	
- 3	0712601-2	BRACKET WHEN EXHAUSTED USE 0712601-6	1	A
	0712601-6	BRACKET	1	B
- 4	0512171-1	BRACKET	1	
- 5	0712601-4	BRACKET	2	
- 6	S1071-4	TUBE-2.40 IN LG BULK ITEM REF S1071-4-2.40	1	
		ATTACHING PARTS		
- 7	NAS397-8	CLAMP	1	
		---*---		
- 7A	0712655-1	BRACKET	2	B
- 7B	MS35489-22	GROMMET	1	B
	0512167-19	BOX ASSEMBLY-BATTERY	1	
- 8	0512167-27	COVER ASSEMBLY-BATTERY BOX	1	
- 8A	1213535-1	PLACARD	1	
- 9	0512167-25	BASE ASSEMBLY-BATTERY BOX	1	
-10	0512167-10	LATCH SPRING	2	
-11	0512167-17	PLATE-LATCH BACKING	2	
		A---SERIAL 185-0364 THRU 185-0388 & 185-0390 THRU 185-0739 SERIAL 18051184 THRU 18051397		
		B---SERIAL 185-0740 THRU 18502310 SERIAL 18051398 THRU 18052384		

Fuselage (Cont)

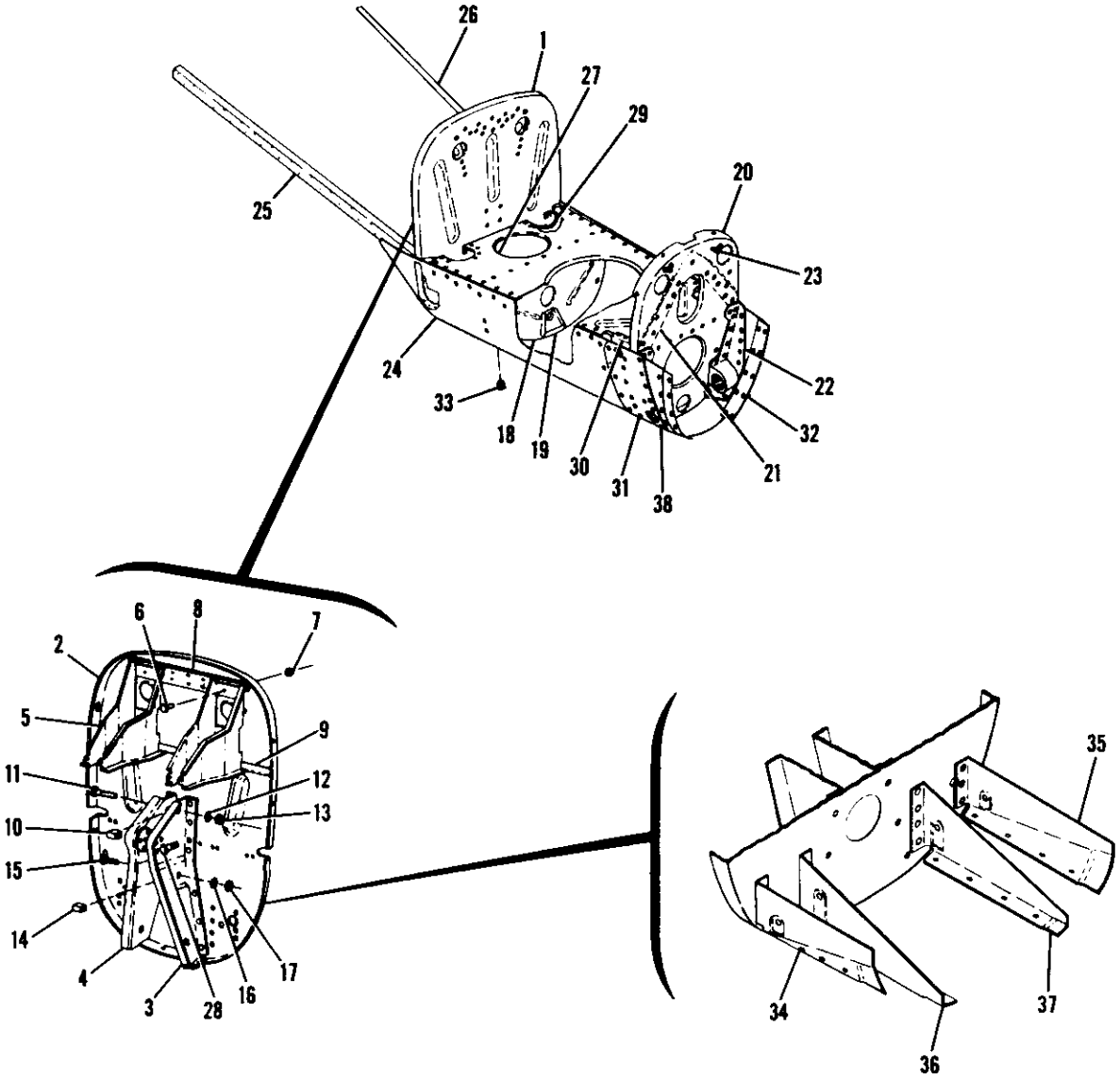

Figure 38. Fuselage Tailcone Assembly

FIGURE AND INDEX NO.	PART NUMBER	DESCRIPTION 1 2 3 4 5 6 7	UNITS PER ASSY	USABLE ON CODE
38 -	0791200-7	TAILCONE ASSEMBLY-FUSELAGE STA 209.00 TO 230.187	1	
- 1	0712311-15	BULKHEAD ASSEMBLY-TAILCONE STA 209.00	1	
- 2	0712311-7	BULKHEAD-TAILCONE STA 209.00	1	
- 3	0712306-9	BRACKET ASSEMBLY-ELEVATOR BELLCRANK REAR LH	1	
- 4	0712306-10	BRACKET ASSEMBLY-ELEVATOR BELLCRANK REAR RH	1	
- 5	0712309-4	BRACKET-RUDDER BELLCRANK WEU 0712309-15	2	A
	0712309-15	BRACKET-RUDDER BELLCRANK	2	D
		ATTACHING PARTS		
- 6	AN3-3A	BOLT	2	
- 7	MS21044N3	NUT	2	
		---*---		
- 8	0712311-14	DOUBLER	1	
- 9	0712311-3	ANGLE	1	
-10	0510146	STOP-ELEVATOR UPPER	1	
		ATTACHING PARTS		
-11	AN4-12A	BOLT	1	
-12	AN960-416	WASHER	1	
-13	NAS679A4	NUT	1	
		---*---		
-14	0510146-9	STOP-ELEVATOR LOWER	1	
		ATTACHING PARTS		
-15	AN4-14A	BOLT	1	
-16	AN960-416	WASHER	1	
-17	NAS679A4	NUT	1	
		---*---		
-18	0712204-5	BULKHEAD ASSEMBLY-TAILCONE STA 215.687	1	
-19	0712204-4	BRACKET ASSEMBLY-TAILGEAR STA 215.687	1	
	0712205-13	BULKHEAD ASSY-TAILCONE STA 230.187 WEU 0712205-14	1	E
	0712205-14	BULKHEAD ASSY-TAILCONE STA 230.187	1	F
-20	0712205-10	BULKHEAD-TAILCONE STA 230.187	1	
-21	1212011-1	STIFFENER	1	
	1212012-1	DOUBLER-INNER	1	
-22	0712305-3	CASTING-TAILGEAR MOUNTING LH	1	
	0712305-4	CASTING-TAILGEAR MOUNTING RH	1	
-23	NAS680A3	NUTPLATE	2	
	AN3-4A	BOLT-STOP	2	B
	NAS428H3-10	BOLT	2	C
	AN315-3R	NUT	2	C
-24	0712000-7	SKIN-TAILCONE	1	
-25	0712207-1	ANGLE-TAILCONE REINFORCEMENT LH	1	
-26	0712207-2	ANGLE-TAILCONE REINFORCEMENT RH	1	
-27	0712206	BULKHEAD ASSEMBLY-TAILCONE HORIZONTAL	1	
		ATTACHING PARTS		
-28	AN3-5A	BOLT	2	
	AN960-10	WASHER	2	
	MS21044N3	NUT	2	
		---*---		
-29	0712206-2	DOUBLER	1	
-30	0712302-1	BRACKET-STABLIZER HINGE LH	1	
	0712302-2	BRACKET-STABLIZER HINGE RH	1	
-31	0712304-3	FITTING-TAILCONE REINFORCEMENT LH	1	
	0712304-4	FITTING-TAILCONE REINFORCEMENT RH	1	
-32	0712304-10	FITTING-STINGER ATTACHMENT	2	
-33	S349	SCOOP-DRAIN	2	
-34	0712301-1	BRACKET-ACTUATOR HINGE OUTBOARD LH	1	
-35	0712301-2	BRACKET-ACTUATOR HINGE OUTBOARD RH	1	
-36	0712301-3	BRACKET-ACTUATOR HINGE INBOARD LH	1	
-37	0712301-4	BRACKET-ACTUATOR HINGE INBOARD RH	1	
-38	48143	PLUG BUTTON UC	1	

A---SERIAL 185-0001 THRU 18501636
SERIAL 18051184 THRU 18052119
B---SERIAL 185-0001 THRU 185-0743
SERIAL 18051184 THRU 18051398
C---SERIAL 185-0744 THRU 18502310
SERIAL 18051399 THRU 18052384
D---SERIAL 18501637 THRU 18502310
SERIAL 18052120 THRU 18052384
E---SERIAL 185-0001 THRU 18502027
SERIAL 18051184 THRU 18052258
F---SERIAL 18502028 THRU 18502310
SERIAL 18052259 THRU 18052384

Fuselage (Cont)

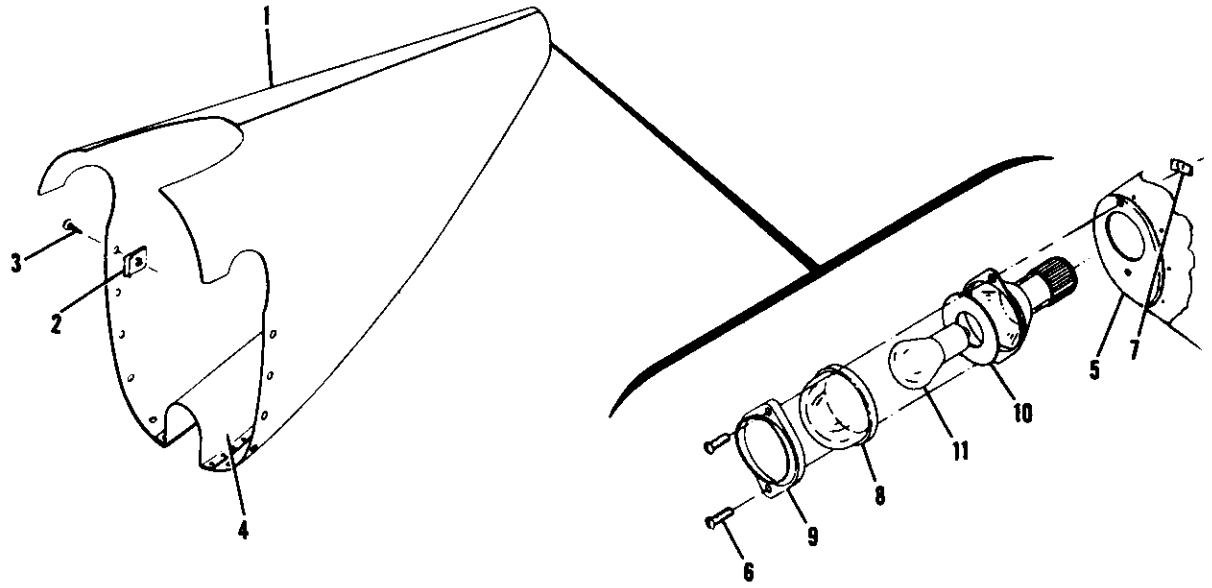

Figure 39. Stinger Installation

FIGURE AND INDEX NO.	PART NUMBER	DESCRIPTION 1 2 3 4 5 6 7	UNITS PER ASSY	USABLE ON CODE
39 -		STINGER INSTALLATION	NP	
- 1	0712400-11	STINGER ASSEMBLY WHEN EXHAUSTED USE 0712400-13	1	A
	0712400-13	STINGER ASSEMBLY	1	C
	0712400-9	STINGER ASSEMBLY WHEN EXHAUSTED USE 0712400-13	1	B
		ATTACHING PARTS		
- 2	NAS395-17-3	NUTPLATE	10	
- 3	S1021Z8-8	SCREW	10	
		---*---		
- 4	0712400-12	PAN-STINGER	1	
- 5	0712400-4	PAN-TAIL LIGHT WEU 0712400-15	1	
	0712400-15	PAN-TAIL LIGHT	1	
	0433006-7	LIGHT ASSEMBLY-TAIL WHEN EXHAUSTED USE C622001-0102	1	D
	C622001-0102	LIGHT ASSEMBLY-TAIL	1	E
		ATTACHING PARTS		
- 6	S1021Z4-8	SCREW	2	
- 7	NAS395-1-3	NUT	2	
		---*---		
- 8	A4513-1	LENS-CLEAR GMC	1	
- 9	C622001-0104	RETAINER-LENS	1	
-10	A2109-3	GASKET GMC	1	
-11	1777	LAMP	1	D
	1777	LAMP GMC	1	E
		A---SERIAL 185-0238 THRU 185-0502		
		B---SERIAL 18051184 THRU 18051471		
		SERIAL 185-0001 THRU 185-0237		
		C---SERIAL 18051472 THRU 18052384		
		SERIAL 185-0503 THRU 18502310		
		D---SERIAL 18051184 THRU 18051911		
		SERIAL 185-0001 THRU 185-1340		
		E---SERIAL 18051912 THRU 18052384		
		SERIAL 185-1341 THRU 18502310		

FIGURE AND INDEX NO.	PART NUMBER	DESCRIPTION 1 2 3 4 5 6 7	UNITS PER ASSY	USABLE ON CODE
40 -		LANDING GEAR INSTALLATION-MAIN	NP	A
- 1	0713018-5	PLATE-LANDING GEAR FILLET LH	1	
	0713018-4	PLATE-LANDING GEAR FILLET RH	1	
		ATTACHING PARTS		
- 2	S1021Z8-8	SCREW	7	
		---+---		
- 3	0713018-3	SEAL-LANDING GEAR	2	
- 4	0441115-3	WEDGE-LANDING GEAR SUPPORT WHEN EXHAUSTED USE 0441023-2	4	
	0441023-2	WEDGE-LANDING GEAR SUPPORT	4	
		ATTACHING PARTS		
- 5	AN4-11A	BOLT	2	
	AN960-416	WASHER	1	
		---+---		
- 6	0741007-1	SHIM-SPRING ALIGNMENT WHEN EXHAUSTED USE 0741022-1	AR	
	0741022-1	SHIM-SPRING ALIGNMENT .036 THICK	AR	
	0741022-2	SHIM-SPRING ALIGNMENT .050 THICK	AR	
- 7	0541105	SHIM-SPRING ADJUSTMENT	AR	

CONTINUED ON NEXT PAGE

Alighting Gear

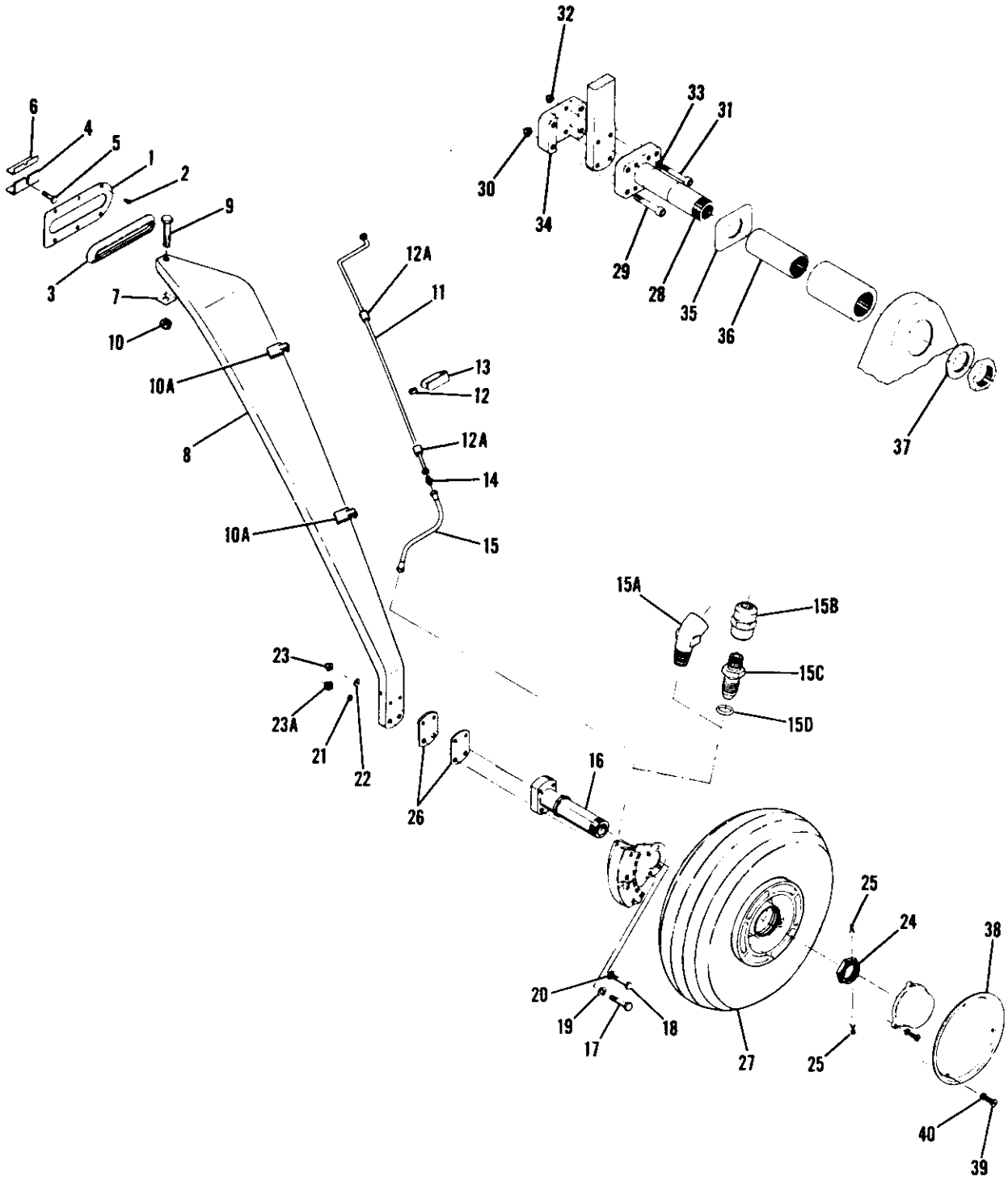

SERIAL 185-0001 THRU 18502310
SERIAL 18051313 THRU 18052384

Figure 40. Main Landing Gear Installation

FIGURE AND INDEX NO.	PART NUMBER	DESCRIPTION 1 2 3 4 5 6 7	UNITS PER ASSY	USABLE ON CODE
40 - 8	0741001-5	SPRING-LANDING GEAR LH WHEN EXHAUSTED USE 0741001-7 -----	1	D
	0741001-7	SPRING ASSEMBLY-LANDING GEAR LH ----------	1	E
	0741001-6	SPRING-LANDING GEAR RH WHEN EXHAUSTED USE 0741001-8 -----	1	D
	0741001-8	SPRING ASSEMBLY-LANDING GEAR RH ----------	1	E
		ATTACHING PARTS		
- 9	AN7-20A	BOLT ----------	1	
-10	MS20365-720C	NUT ----------	1	
		---*---		
-10A	1441001-2	CLIP-BRAKE LINE ----------	2	E
-11	0500106-317	LINE-BRAKE ----------	2	D
	0700147-28	LINE-BRAKE WHEN EXHAUSTED USE 0700147-43 ----------	2	F
	0700147-43	LINE-BRAKE ----------	2	G
-12	0441119	HOSE-BRAKE LINE PROTECTOR ----------	2	D
-12A	S1495-3	HOSE-0.50 IN LG BULK ITEM REF S1495-3-0.50 ----------	4	E
-13	0741000-7	BRACKET-BRAKE LINE RETAINING ----------	2	D
-14	AN815-4D	UNION ----------	2	D
-15	S1167-4-0120	HOSE ASSEMBLY-BRAKE LINE ----------	2	D
	S1810-800	HOSE ASSEMBLY-BRAKE LINE ----------	2	E
-15A	AN816-4D	NIPPLE ----------	2	D
	AN915-1D	ELBOW USED WITH C163030 BRAKE ASSYS ONLY ----------	2	E
-15B	AN910-1D	COUPLING USED WITH C163032 BRAKE ASSYS ONLY ----------	2	
-15C	AN816-3D	NIPPLE USED WITH C163032 BRAKE ASSYS ONLY ----------	2	
-15D	MS28778-3	O RING USED WITH C163032 BRAKE ASSYS ONLY ----------	2	
-16	1441003-1	AXLE-LANDING GEAR ----------	2	
		ATTACHING PARTS		
-17	NAS146-41	BOLT-LOWER ----------	2	
	NAS146-39	BOLT-LOWER ALT ----------	2	
-18	NAS145-38	BOLT ----------	2	
-19	MS20002C6	WASHER-COUNTERSINK ----------	2	
-20	MS20002C5	WASHER-COUNTERSINK ----------	2	
-21	MS20002-6	WASHER ----------	AR	
-22	MS20002-5	WASHER ----------	AR	
-23	NAS679A5	NUT UPPER ----------	2	
-23A	NAS679A6	NUT LOWER ----------	2	
		---*---		
-24	S1117-24	NUT-AXLE ----------	2	
-25	MS24665-351	PIN-COTTER ----------	4	
-26	0441139-5	SHIM-LANDING GEAR ----------	AR	
	0441139-6	SHIM-LANDING GEAR ----------	AR	
	0541111-2	SHIM-LANDING GEAR ----------	AR	
-27		WHEEL & BRAKE ASSEMBLIES-FIXED GEAR SEE ----------	1	
		FIGURES 42, 42A & 42B		
	0741008-5	AXLE ASSEMBLY-SKI LANDING GEAR SKI ONLY ----------	1	
-28	0741103	AXLE-SKI LANDING GEAR ----------	1	
		ATTACHING PARTS		
-29	NAS146-36	BOLT ----------	6	
-30	NAS679A6	NUT ----------	6	
-31	NAS145-35	BOLT ----------	2	
-32	NAS679A5	NUT ----------	2	
-33	MS20002C5	WASHER ----------	2	
-34	0741008-1	SHOE ----------	1	
		---*---		
-35	0741008-2	WASHER ----------	1	
-36	0741008-4	BUSHING ----------	1	
-37	0741008-3	WASHER ----------	1	
-38	1241063-2	HUB CAP ----------	2	B
	0741048-8	HUB CAP ----------	2	C
		ATTACHING PARTS		
-39	AN515-8R4	SCREW ----------	3	
-40	AN936A8	WASHER ----------	3	
		---*---		
		A---SERIAL 185-0001 THRU 18502310		
		SERIAL 18051313 THRU 18052384		
		B---SERIAL 185-0001 THRU 185-1300		
		SERIAL 18051313 THRU 18051875		
		C---SERIAL 185-1301 THRU 18502310		
		SERIAL 18051876 THRU 18052384		
		D---SERIAL 185-0001 THRU 185-1341		
		SERIAL 18051313 THRU 18051909		
		E---SERIAL 185-1342 THRU 18502310		
		SERIAL 18051910 THRU 18052384		
		F---SERIAL 185-1342 THRU 185-1539		
		SERIAL 18051910 THRU 18052076		
		G---SERIAL 185-1540 THRU 18502310		
		SERIAL 18052077 THRU 18052384		

Alighting Gear (Cont)

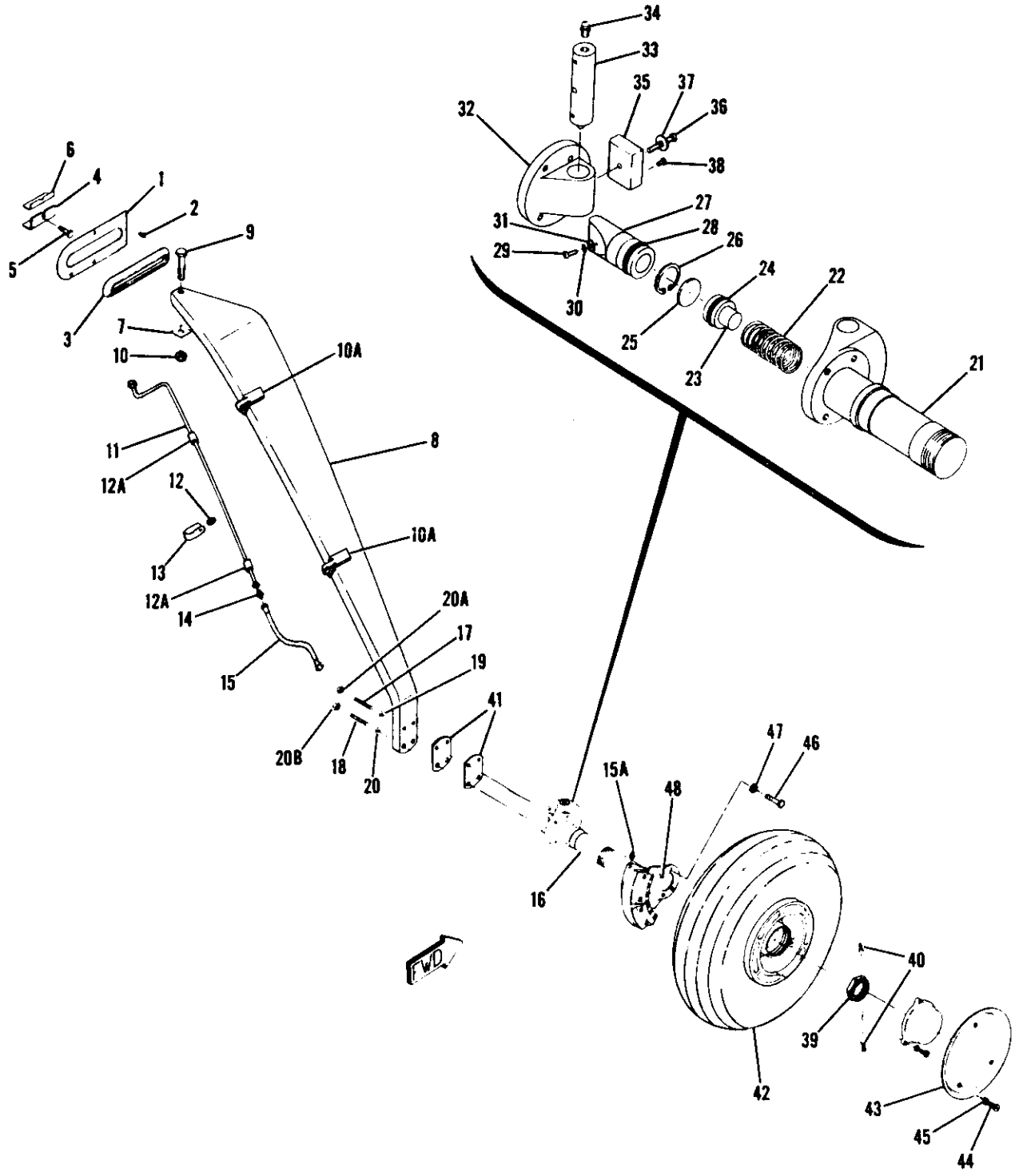

SERIAL 185-1150 THRU 185-1447
SERIAL 18051775 THRU 18051993

Figure 40A. Main Landing Gear Installation (Crosswind)

FIGURE AND INDEX NO.	PART NUMBER	DESCRIPTION 1 2 3 4 5 6 7	UNITS PER ASSY	USABLE ON CODE
40A-		LANDING GEAR INSTALLATION-MAIN CROSSWIND	NP	A
- 1	0713018-4	PLATE-LANDING GEAR FILLET RH	1	
	0713018-5	PLATE-LANDING GEAR FILLET LH	1	
		ATTACHING PARTS		
- 2	S1021Z8-8	SCREW	6	
		---*---		
- 3	0713018-3	SEAL-LANDING GEAR	2	
- 4	0441023-2	WEDGE-LANDING GEAR SUPPORT	4	
		ATTACHING PARTS		
- 5	AN4-11A	BOLT	1	
	AN960-416	WASHER	1	
		---*---		
- 6	0741022-1	SHIM-SPRING ALIGNMENT	AR	
- 7	0541105	SHIM-SPRING ADJUSTMENT	AR	
- 8	0741001-6	SPRING-LANDING GEAR RH WHEN EXHAUSTED USE 0741001-8	1	D
	0741001-8	SPRING ASSEMBLY-LANDING GEAR RH	1	E
	0741001-5	SPRING-LANDING GEAR LH WHEN EXHAUSTED USE 0741001-7	1	D
	0741001-7	SPRING ASSEMBLY-LANDING GEAR LH	1	E
		ATTACHING PARTS		
- 9	AN7-20A	BOLT	1	
-10	MS20365-720C	NUT	1	
		---*---		
-10A	1441001-2	CLIP-BRAKE LINE	2	E
-11	0500106-317	LINE-BRAKE	2	D
	0700147-28	LINE-BRAKE WHEN EXHAUSTED USE 0700147-43	2	E
-12	0441119	HOSE-BRAKE LINE PROTECTOR	2	D
-12A	S1495-3	HOSE-0.50 IN LG BULK ITEM REF S1495-3-0.50	4	E
-13	0741000-7	BRACKET-BRAKE LINE RETAINING	2	D
-14	AN815-4D	UNION	2	D
-15	S1167-4-0100	HOSE ASSEMBLY-BRAKE LINE	2	D
	S1810-550	HOSE ASSEMBLY-BRAKE LINE	2	E
-15A	MS20823-4D	ELBOW	2	D
	AN915-1D	ELBOW	2	E
-16	0741636-2	AXLE ASSEMBLY-CROSSWIND RH	1	
	0741636-3	AXLE ASSEMBLY-CROSSWIND LH	1	
		ATTACHING PARTS		
-17	0741637-1	STUD-UPPER	2	
-18	0741637-2	STUD-UPPER	2	
-19	AN960-516	WASHER-UPPER	AR	
-20	AN960-616	WASHER-LOWER	AR	
-20A	NAS679C5M	NUT-UPPER	2	
-20B	NAS679C6M	NUT-LOWER	2	
		---*---		
-21	0741105-1	AXLE	1	
-22	0742143-1	SPRING	1	
-23	0742141-4	PISTON	1	
-24	AN6227-15	PACKING	1	
-25	0742141-3	ORIFICE	1	
-26	MS16625-1112	RING-SNAP	1	
-27	0742141-5	PLUNGER	1	
-28	AN6227-17	PACKING	1	
-29	AN503-8-6	SCREW	1	
-30	AN960-8L	WASHER	1	
-31	600-015-8	STAT-O-SEAL PKSC	1	
-32	0742141-2	ADAPTER-RH	1	
	0742141-1	ADAPTER-LH	1	
		ATTACHING PARTS		
-33	0742141-6	PIN	1	
-34	MS15001-1	FITTING-ZERK	2	
-35	0742141-8	STOP	1	
-36	NAS1303-23H	BOLT	1	
-37	AN960-10L	WASHER	1	
-38	AN500A8-5	SCREW	1	
		---*---		
-39	S1117-24	NUT-AXLE	2	
-40	MS24665-351	PIN-COTTER	4	

CONTINUED ON NEXT PAGE

FIGURE AND INDEX NO.	PART NUMBER	DESCRIPTION 1 2 3 4 5 6 7	UNITS PER ASSY	USABLE ON CODE
40A-41	0441139-5	SHIM-MAIN LANDING GEAR	AR	
	0441139-6	SHIM-MAIN LANDING GEAR	AR	
	0541111-2	SHIM-MAIN LANDING GEAR	AR	
-42	SEE FIG 42C	WHEEL & BRAKE ASSEMBLIES	NP	
-43	1241063-2	HUB CAP	2	B
	0741048-8	HUB CAP	2	C
		ATTACHING PARTS		
-44	AN515-8R4	SCREW	3	
-45	AN936A8	WASHER	3	
		---*---		
-46	AN5H5A	BOLT	4	
-47	AN960-516	WASHER	4	
-48	S2180-1	BUSHING	4	
		A---SERIAL 185-1150 THRU 185-1447		
		SERIAL 18051775 THRU 18051993		
		B---SERIAL 185-1150 THRU 185-1300		
		SERIAL 18051775 THRU 18051875		
		C---SERIAL 185-1301 THRU 185-1447		
		SERIAL 18051876 THRU 18051993		
		D---SERIAL 185-1150 THRU 185-1341		
		SERIAL 18051775 THRU 18051909		
		E---SERIAL 185-1342 THRU 185-1447		
		SERIAL 18051910 THRU 18051993		

Alighting Gear

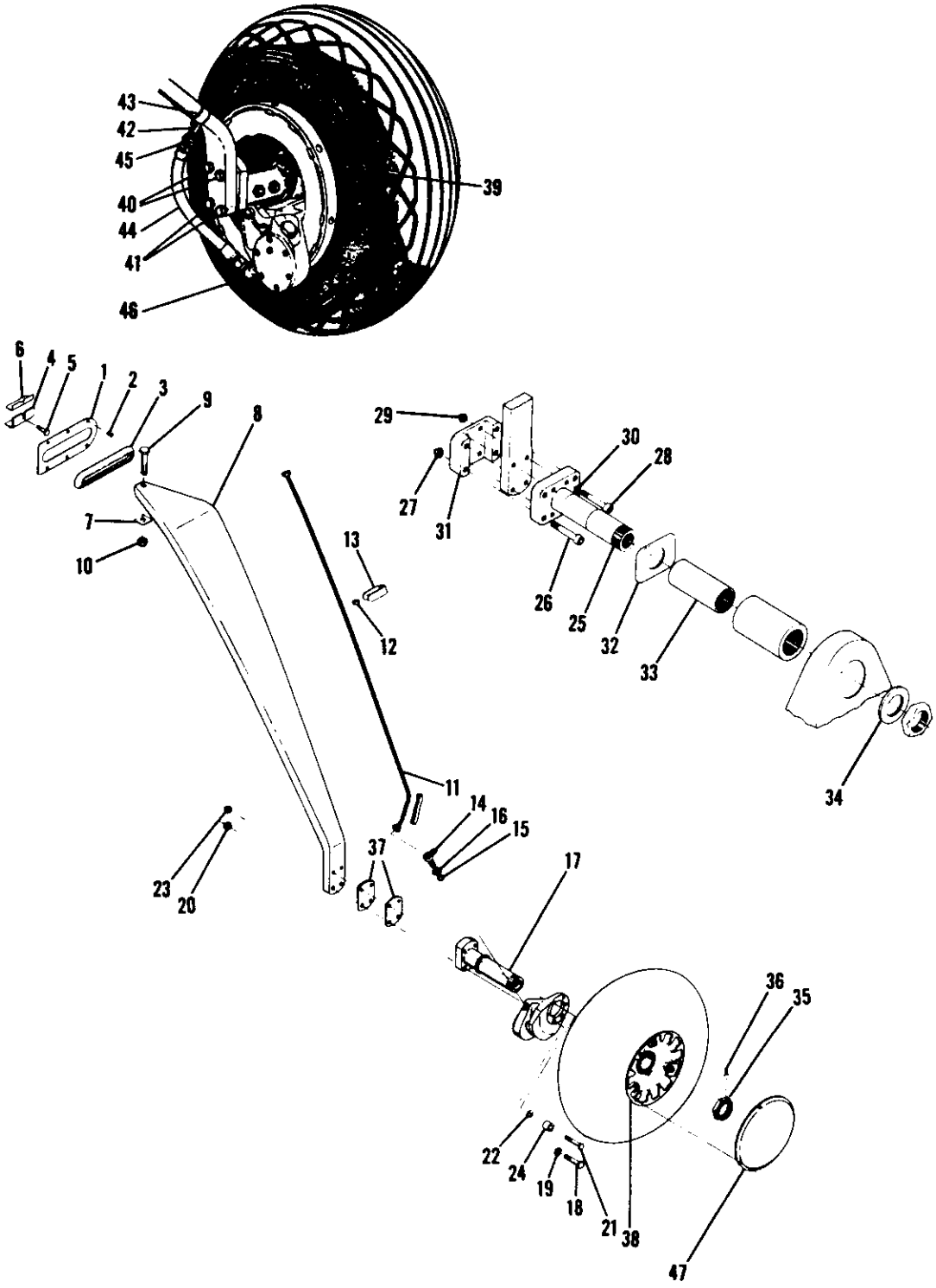

SERIAL 18051184 THRU 18051312

Figure 41. Landing Gear Installation

FIGURE AND INDEX NO.	PART NUMBER	DESCRIPTION 1 2 3 4 5 6 7	UNITS PER ASSY	USABLE ON CODE
41 -		LANDING GEAR INSTALLATION-MAIN	NP	A
- 1	0713018-5	PLATE-LANDING GEAR FILLET LH	1	
	0713018-4	PLATE-LANDING GEAR FILLET RH	1	
		ATTACHING PARTS		
- 2	S1021Z8-8	SCREW	7	
		---*---		
- 3	0713018-3	SEAL-LANDING GEAR	2	
- 4	0441115-4	WEDGE-LANDING GEAR SUPPORT WHEN EXHAUSTED USE 0441023-2 -	4	
	0441115-3 *	WEDGE-LANDING GEAR SUPPORT HEAVY DUTY WHEN EXHAUSTED USE 0441023-2	4	
	0441023-2	WEDGE-LANDING GEAR SUPPORT	4	
		ATTACHING PARTS		
- 5	AN4-11A	BOLT	1	
	AN960-416	WASHER	1	
		---*---		
- 6	0741007-1	SHIM-SPRING ALIGNMENT WHEN EXHAUSTED USE 0741022-1	AR	
	0741022-1	SHIM-SPRING ALIGNMENT	AR	
- 7	0541105	SHIM-SPRING ADJUSTMENT	AR	
- 8	0741001-3	SPRING-LANDING GEAR LH	1	
	0741001-4	SPRING-LANDING GEAR RH	1	
	0741001-5 *	SPRING-LANDING GEAR LH HEAVY DUTY	1	
	0741001-6 *	SPRING-LANDING GEAR RH HEAVY DUTY	1	
		ATTACHING PARTS		
- 9	AN7-20A	BOLT	1	
-10	MS20365-720C	NUT	1	
		---*---		
-11	0500106-165	LINE-BRAKE LH	1	
	0500106-166	LINE-BRAKE RH	1	
-12	0441119	HOSE-BRAKE LINE PROTECTOR	2	
-13	0741000-7	BRACKET-BRAKE LINE RETAINING	2	
-14	AN833-4D	ELBOW	2	
-15	MS28778B4	GASKET	2	
-16	AN924-4D	NUT	2	
-17	0541124-1	AXLE-LANDING GEAR	2	
	1441003-1	AXLE LANDING GEAR HEAVY DUTY	2	
		ATTACHING PARTS		
-18	AN6-25A	BOLT-LOWER	2	
	NAS146-47	BOLT-LOWER HEAVY DUTY	2	
-19	AN960-616	WASHER	AR	
	MS20002C6	WASHER HEAVY DUTY	AR	
-20	NAS679A6	NUT	2	
-21	AN5-25A	BOLT	2	
	NAS145-45	BOLT HEAVY DUTY	2	
-22	AN960-516	WASHER	AR	
	MS20002C5	WASHER HEAVY DUTY	AR	
-23	NAS679A5	NUT	2	
-24	0541103-16	BUSHING	1	
		---*---		
	0741008-5	AXLE ASSEMBLY-SKI LANDING GEAR SKI ONLY	2	
-25	0741103	AXLE-SKI LANDING GEAR	1	
		ATTACHING PARTS		
-26	NAS146-35	BOLT	6	
-27	NAS679A6	NUT	6	
-28	NAS145-35	BOLT	2	
-29	NAS679A5	NUT	2	
-30	MS20002C5	WASHER	2	
-31	0741008-1	SHOE	1	
		---*---		
-32	0741008-2	WASHER	1	
-33	0741008-4	BUSHING	1	
-34	0741008-3	WASHER	1	
-35	S1117-24	NUT-AXLE	2	
-36	MS24665-351	PIN-COTTER	2	
-37	0441139-5	SHIM-LANDING GEAR	AR	
	0441139-6	SHIM-LANDING GEAR	AR	
	0541111-2	SHIM-LANDING GEAR	AR	

CONTINUED ON NEXT PAGE

FIGURE AND INDEX NO.	PART NUMBER	DESCRIPTION 1 2 3 4 5 6 7	UNITS PER ASSY	USABLE ON CODE
41 -38	SEE FIG 42A & 43	WHEEL & BRAKE ASSEMBLIES-FIXED GEAR	1	
		CROSSWIND GEAR INSTALLATION	1	
-39	SEE FIG 44	WHEEL & BRAKE ASSEMBLIES-CROSSWIND GEAR	1	
	0441150-8	WHEEL BRAKE & COLLAR ASSEMBLY-CROSSWIND LH	1	
	0441150-9	WHEEL BRAKE & COLLAR ASSEMBLY-CROSSWIND RH	1	
		ATTACHING PARTS		
-40	AN5H12	BOLT	2	
	AN960-516	WASHER	2	
-41	AN76-11	BOLT	2	
	AN960-616L	WASHER	2	
		---*---		
-42	0500106-169	LINE-BRAKE	1	
		ATTACHING PARTS		
-43	0741004	CLAMP	1	
	0441119	HOSE-BRAKE LINE PROTECTOR	1	
	NAS679A08	NUT	1	
	AN515-8R10	SCREW	1	
		---*---		
-44	S1167-4-0100	HOSE ASSEMBLY-BRAKE LINE	1	
-45	AN815-4D	UNION	1	
-46	AN775-4	BOLT	1	
	AN776-4D	ELBOW	1	
	AN901-4C	GASKET	2	
-47	1241063-2	HUB CAP	2	
		ATTACHING PARTS		
	AN515-8R4	SCREW	3	
	AN936A8	WASHER	3	
		---*---		
		NOTE. *USE 0441115-3 WEDGE WITH HEAVY DUTY LANDING GEAR SPRINGS 0741001-5 &-6 ONLY		
		A---SERIAL 18051184 THRU 18051312		

Alighting Gear (Cont)

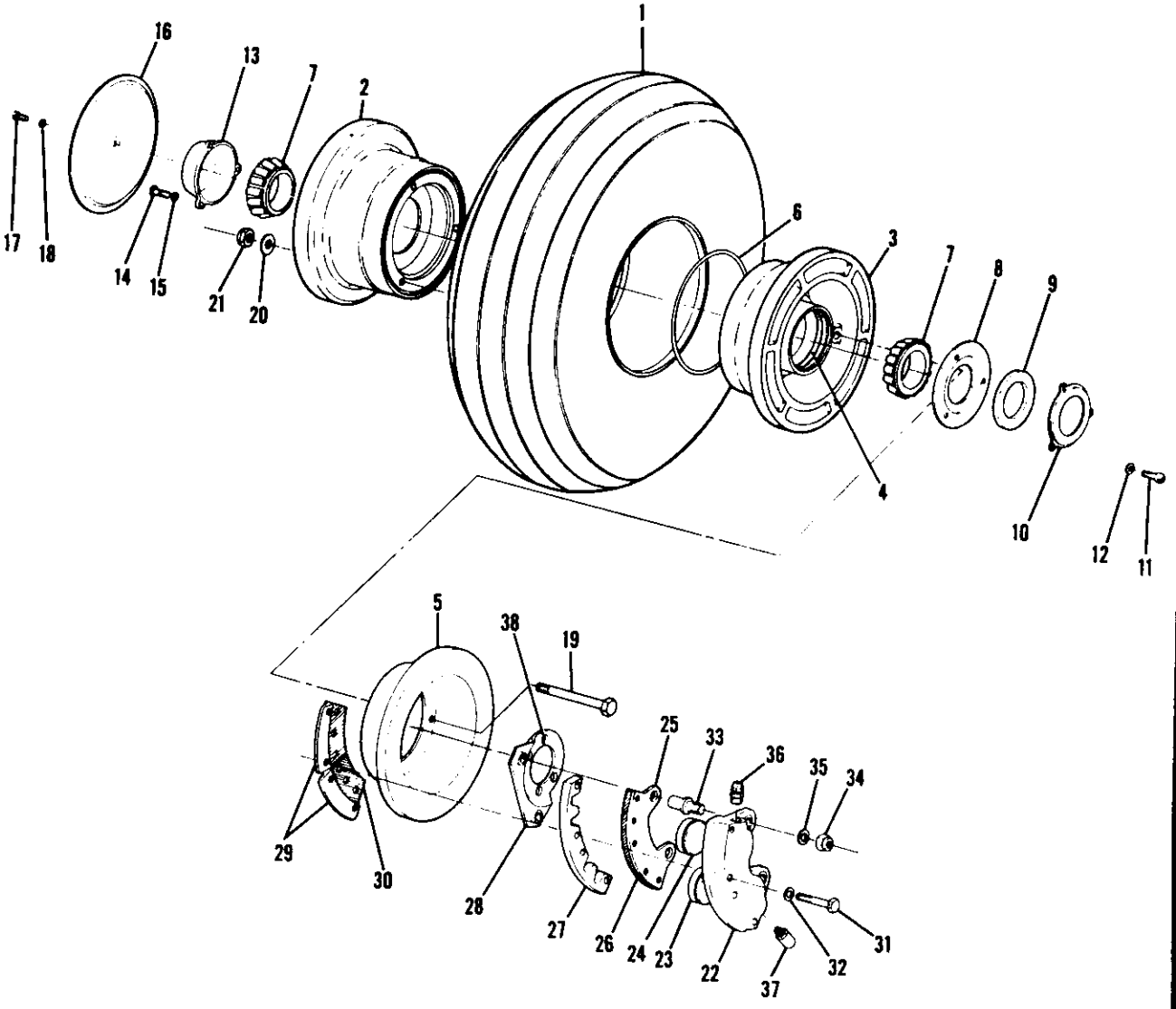

SERIAL 185-0001 THRU 185-0653

Figure 42. Main Landing Gear Wheel & Brake Assembly

FIGURE AND INDEX NO.	PART NUMBER	DESCRIPTION 1 2 3 4 5 6 7	UNITS PER ASSY	USABLE ON CODE
42 -		WHEEL & BRAKE ASSEMBLY-MAIN LANDING GEAR	NP	C
- 1	C262003-0304	TIRE-TUBELESS 6.00X6 6 PLY	1	A
	C262003-0308	TIRE-TUBELESS 8.00X6 6 PLY	1	A
	C262003-0204	TIRE 6.00X6 6 PLY	1	B
	C262003-0207	TIRE 8.00X6 6 PLY	1	B
	C262023-0102	TUBE 6.00X6	1	B
	C262023-0104	TUBE 8.00X6	1	B
	0741026-3	WHEEL ASSEMBLY CEP 40-32	1	A
	0441156-18	WHEEL ASSEMBLY CEP 40-66	1	B
- 2	162-4	WHEEL HALF ASSEMBLY-OUTER CFP	1	A
	162-10	WHEEL HALF ASSEMBLY-OUTER CFP	1	B
- 3	161-4	WHEEL HALF ASSEMBLY-INNER CFP	1	A
	161-25	WHEEL HALF ASSEMBLY-INNER CFP	1	B
- 4	13836	CUP-BEARING CFP	1	
- 5	164-7	BRAKE DISC ASSEMBLY CFP	1	
- 6	1866-30	O RING CFP	1	A
- 7	13889	BEARING-CONE CFP	2	
- 8	156-1	PLATE-GREASE SEAL CFP	1	
- 9	39091	FELT-GREASE SEAL CFP	1	
-10	B39094	RING-GREASE SEAL CFP	1	
		ATTACHING PARTS		
-11	8-32X1/2	SCREW CFP	3	
-12	1208	WASHER-LOCK CFP	3	
		---*---		
-13	38520A	HUB CAP CFP	1	
		ATTACHING PARTS		
-14	8-32X1/2	SCREW CFP	3	
-15	1208	WASHER CFP	3	
		---*---		
-16	27-121	DUST-SHIELD CFP	1	
		ATTACHING PARTS		
-17	10-24X1/2	SCREW CFP	1	
-18	1210	WASHER CFP	1	
		---*---		
-19	AN4-40A	BOLT	3	
-20	AN960-416	WASHER	3	
-21	NAS679A4	NUT	3	
	0741027-2	BRAKE ASSEMBLY-MAIN LANDING GEAR	1	
-22	61-7	CYLINDER-BRAKE CFP	1	
-23	3002	PISTON CFP	2	
-24	AN6227B23	O RING CFP	2	
-25	73-4	PLATE ASSEMBLY-PRESSURE CFP	1	
-26	66-3	LINING CFP	1	
	561	RIVET CFP	6	
-27	68-7	SHIM CFP	1	
-28	75-15	PLATE ASSEMBLY-TORQUE CFP	1	
-29	74-2	PLATE ASSEMBLY-BACK CFP	2	
-30	66-2	LINING CFP	1	
	561	RIVET CFP	3	
-31	AN4H16A	BOLT	4	
-32	AN960-416L	WASHER	4	
-33	3013	BOLT-ANCHOR CFP	2	
-34	NAS679A6	NUT	2	
-35	AN960-616L	WASHER	2	
-36	AN816-4D	FITTING	1	
-37	183-1	CAP-BLEEDER CFP	1	
	FC6446	SCREW-BLEEDER CFP	1	
	37206	SEAT-BLEEDER CFP	1	
-38	145-10	BUSHING-TORQUE PLATE CFP	2	
	R561	RIVET SET KIT CFP	1	

A---SERIAL 185-0001 THRU 185-0512
B---SERIAL 185-0513 THRU 185-0653
C---SERIAL 185-0001 THRU 185-0653

Landing Gear (Cont)

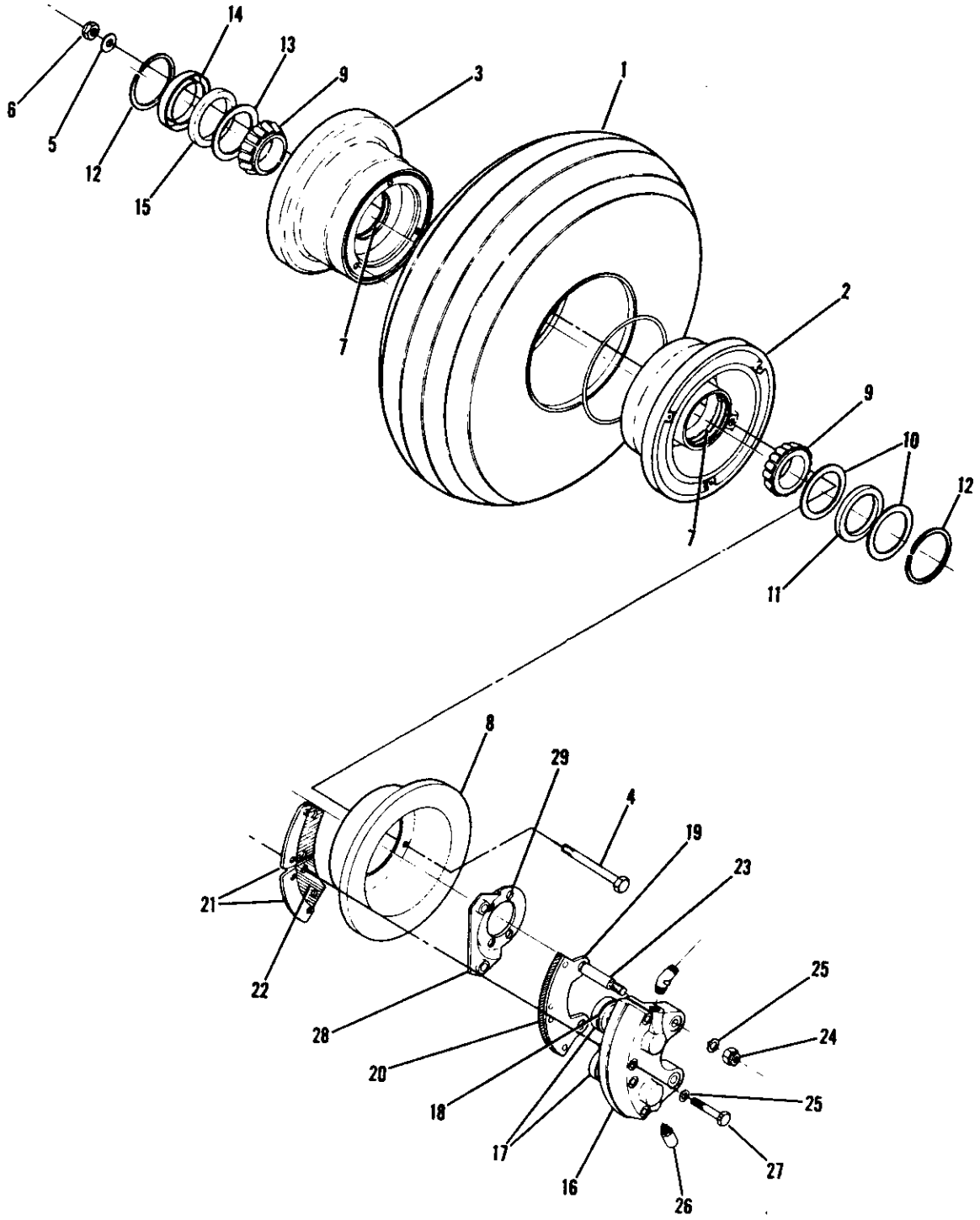

SERIAL 185-0654 THRU 18502310
SERIAL 18051313 THRU 18052384

Figure 42A. Main Landing Gear Wheel and Brake Installation

FIGURE AND INDEX NO.	PART NUMBER		DESCRIPTION 1 2 3 4 5 6 7	UNITS PER ASSY	USABLE ON CODE
42A-		**	MAIN LANDING GEAR WHEEL AND BRAKE INSTALLATION	NP	A
- 1	C262003-0204		TIRE 6.00X6 6 PLY RATED	1	
	C262003-0207		TIRE 8.00X6 6 PLY RATED	1	
	C262023-0102		TUBE 6.00X6	1	
	C262023-0104		TUBE 8.00X6	1	
	1241156-10		WHEEL ASSEMBLY CFP 40-75 WHEN EXHAUSTED	1	B
			USE C163001-0301		
	C163001-0301	Z	WHEEL ASSEMBLY CFP 40-75B	1	C
	C163001-0302	#	WHEEL ASSEMBLY CFP 40-75D	1	F
- 2	161-30		WHEEL HALF ASSEMBLY-INNER CFP	1	
- 3	162-27		WHEEL HALF ASSEMBLY-OUTER CFP	1	
			ATTACHING PARTS		
- 4	AN5-35A		BOLT	3	
- 5	AN960-516		WASHER	3	
- 6	NAS679A5		NUT	3	
			---*---		
- 7	13836		CUP-BEARING CFP	1	
- 8	164-15K		BRAKE DISC ASSEMBLY CFP WHEN EXHAUSTED	1	B
			USE 164-15A		
	164-15A		BRAKE DISC ASSEMBLY CFP USED WITH	1	C
			C163001-0301 WHEEL ASSY ONLY		
	164-03600		BRAKE DISC ASSEMBLY CFP USED WITH	1	F
			C163001-0302 WHEEL ASSY ONLY		
- 9	13889		CONE-BEARING CFP	2	
-10	3022		RING-GREASE SEAL CFP	2	
-11	3021		FELT-GREASE SEAL CFP	1	
-12	3023		RING-SNAP CFP	2	
-13	A39070		RING-GREASE SEAL CFP	1	
-14	153-15		RING-GREASE SEAL CFP	1	
-15	154-13		FELT-GREASE SEAL CFP	1	
	1241157-1	*	BRAKE ASSEMBLY CFP 30-52 WHEN EXHAUSTED	1	D
			USE C163030-0303		
	C163030-0303	Z*	BRAKE ASSEMBLY CFP 30-52	1	E
	C163030-0305	#*	BRAKE ASSEMBLY CFP 30-52D WEU C163030-0313	1	G
	C163030-0313	#*	BRAKE ASSEMBLY CFP 30-52N	1	H
-16	61-18		CYLINDER-BRAKE CFP	1	
-17	62-15		PISTON CFP	2	
-18	AN6227B27		O RING	2	
-19	73-10		PLATE ASSEMBLY-PRESSURE CFP	1	
-20	66-30		LINING CFP	2	
	561		RIVET CFP	4	
-21	74-10		PLATE ASSEMBLY-BACK CFP	2	
-22	66-30		LINING CFP	1	
	561		RIVET CFP	2	
-23	69-4		BOLT-ANCHOR CFP	2	
-24	NAS679A4		NUT	2	
-25	AN960-416L		WASHER	6	
-26	183-1		CAP-BLEEDER CFP	1	
	FC6446		SCREW-BLEEDER CFP	1	
	37-206		SEAT-BLEEDER CFP	1	
-27	LP4-20AM		BOLT CFP	4	

CONTINUED ON NEXT PAGE

FIGURE AND INDEX NO.	PART NUMBER	DESCRIPTION 1 2 3 4 5 6 7	UNITS PER ASSY	USABLE ON CODE
42A-28	75-15	PLATE ASSEMBLY-TORQUE CFP USED ----------	1	
		WITH 1241157-1 & C163030-0303 ASSY ONLY		
	075-05400	PLATE ASSEMBLY-TORQUE CFP USED ----------	1	G
		WITH C163030-0305 ASSY ONLY WEU 075-05401		
	075-05401	PLATE ASSEMBLY-TORQUE CFP USED ----------	1	H
		WITH C163030-0305 & C163030-0313 ASSY ONLY		
-29	145-10	BUSHING-TORQUE PLATE CFP ----------	2	
	R561	RIVET SET KIT CFP ----------	1	

NOTE. %THESE ASSYS ARE NOT USED ON AIRCRAFT EQUIPPED WITH 8.00X6 TIRES SERIALS 185-1471 & ON & 18052011 & ON.

NOTE. #THESE ASSYS ARE USED ONLY ON AIRCRAFT EQUIPPED WITH 8.00X6 TIRES SERIALS 185-1471 & ON & 18052011 & ON.

NOTE. *BRAKE ASSY DESCRIBED IS NORMALLY LH, REVERSE FITTINGS & TORQUE PLATE BUSHINGS FOR RH INSTALLATION.

NOTE. **WHEELS & BRAKES SHOWN ON THIS FIGURE MUST NOT BE INTERMIXED WITH WHEELS & BRAKES SHOWN ON FIGURE 42B.

A---SERIAL 185-0654 THRU 18502310
SERIAL 18051313 THRU 18052384
B---SERIAL 185-0654 THRU 185-1095
SERIAL 18051313 THRU 18051752
C---SERIAL 185-1096 THRU 18502310
SERIAL 18051753 THRU 18052384
D---SERIAL 185-0654 THRU 185-1336
SERIAL 18051313 THRU 18051907
E---SERIAL 185-1337 THRU 18502310
SERIAL 18051908 THRU 18052384
F---SERIAL 185-1471 THRU 18502310
SERIAL 18052011 THRU 18052384
G---SERIAL 185-1471 THRU 18501878
SERIAL 18052011 THRU 18052195
H---SERIAL 18501879 THRU 18502310
SERIAL 18052196 THRU 18052384

Alighting Gear (Cont)

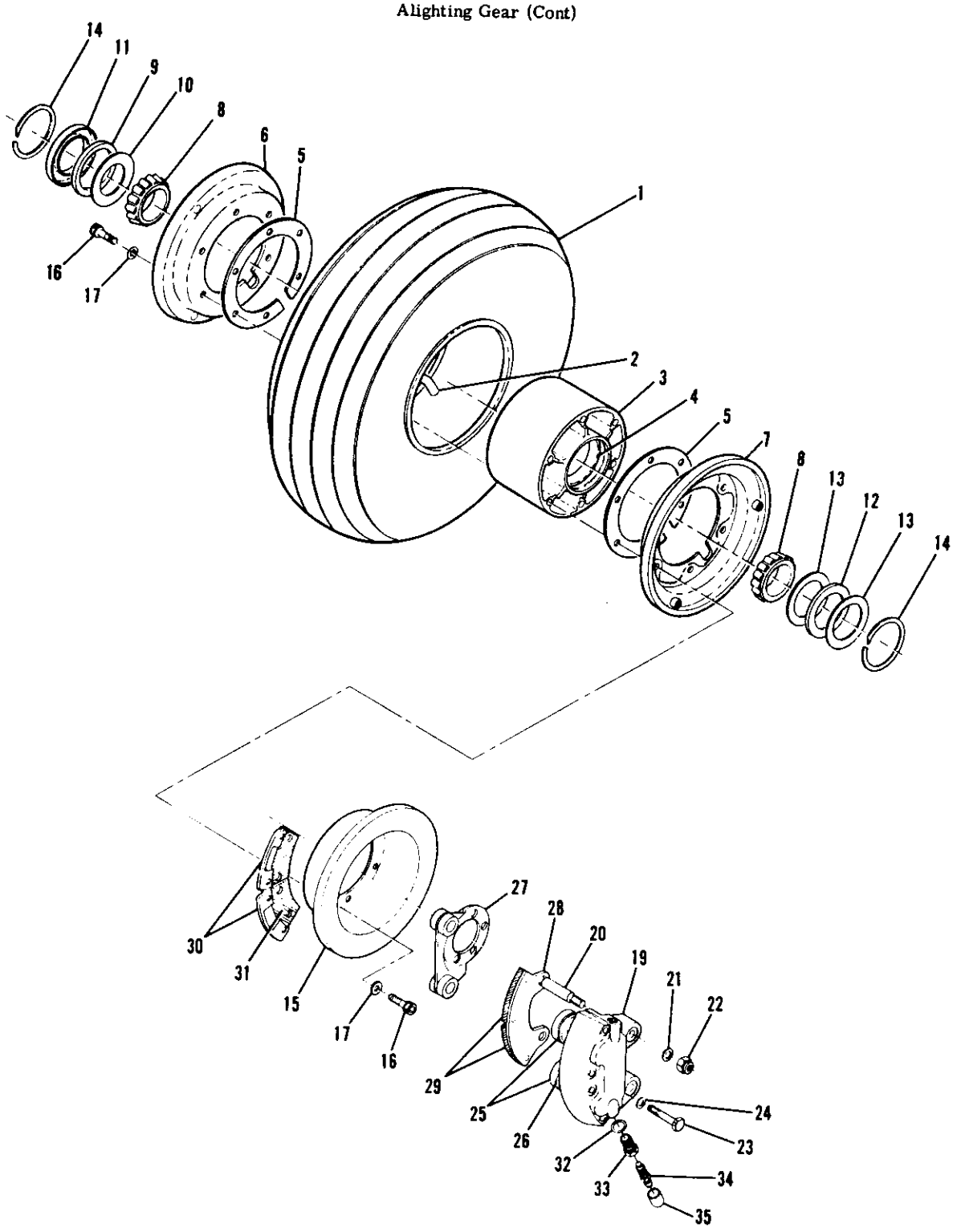

SERIAL 18502091 THRU 18502310
SERIAL 18052285 THRU 18052384

Figure 42B. Main Landing Gear Wheel & Brake Assembly

FIGURE AND INDEX NO.	PART NUMBER	DESCRIPTION 1 2 3 4 5 6 7	UNITS PER ASSY	USABLE ON CODE
42B-	*	MAIN GEAR WHEEL & BRAKE ASSEMBLIES ALT MCCAULEY -------	NP	A
- 1	C262003-0204	TIRE 6.00X6 6 PLY RATED ----------	1	
	C262003-0207	TIRE 8.00X6 6 PLY RATED ----------	1	
- 2	C262023-0102	TUBE 6.00X6 ----------	1	
	C262023-0104	TUBE 8.00X6 ----------	1	
	C163004-0103 **	WHEEL ASSEMBLY-MAIN GEAR MCL D30291-3 ----------	NP	
	C163004-0101 %	WHEEL ASSEMBLY-MAIN GEAR MCL D30291-1 ----------	1	
- 3	D30259	HUB ASSEMBLY MCL ----------	1	
- 4	A30079-1	CUP-BEARING MCL ----------	2	
- 5	B30076	SPACER MCL ----------	2	
- 6	D30222-3	FLANGE-WHEEL MCL USED WITH C163004-0103** ---------	1	
	D30222-2	FLANGE-WHEEL MCL USED WITH C163004-0101 ----------	1	
- 7	D30210	FLANGE-WHEEL MCL ----------	1	
- 8	A30079-2	CONE-BEARING MCL ----------	2	
- 9	A30010	GREASE SEAL-FELT MCL ----------	1	
-10	A30015	RETAINER-GREASE SEAL MCL ----------	1	
-11	A30014	RETAINER-GREASE SEAL MCL ----------	1	
-12	A30011	GREASE SEAL-FELT MCL ----------	1	
-13	A30013	RETAINER-GREASE SEAL MCL ----------	2	
-14	A1636-24	RING-RETAINER MCL ----------	2	
-15	C30414	DISC ASSEMBLY MCL USED WITH C163004-0103** --------	1	
	C30388	DISC ASSEMBLY MCL USED WITH C163004-0101 ----------	1	
-16	A1635-79	SOCKET HEAD CAP SCREW MCL ----------	12	
-17	A1638-1	WASHER MCL ----------	12	
-18		DELETED ----------		
	C163032-0205	BRAKE ASSEMBLY-LH USED WITH C163004-0103** WHEEL --------	1	
	C163032-0207	BRAKE ASSEMBLY-LH USED WITH C163004-0101 WHEEL ----------	1	
	C163032-0206	BRAKE ASSEMBLY-RH USED WITH C163004-0103** WHEEL --------	1	
	C163032-0208	BRAKE ASSEMBLY-RH USED WITH C163004-0101 WHEEL ----------	1	
-19	D30119	CYLINDER ASSEMBLY-BRAKE MCL ----------	1	
-20	A30023	BOLT-ANCHOR MCL ----------	2	
-21	A1638-15	WASHER MCL ----------	2	
-22	A1639-26	NUT MCL ----------	2	
-23	A2513-49	BOLT MCL ----------	4	
-24	A1638-15	WASHER MCL ----------	4	
-25	B30161	PISTON MCL ----------	2	
-26	A1633-48	O RING MCL ----------	2	
-27	B30107-1	TORQUE PLATE ASSY-LH MCL USED WITH C163032-0205 ---	1	
	B30278-1	TORQUE PLATE ASSY-LH MCL USED WITH C163032-0207 ---	1	
	B30107-2	TORQUE PLATE ASSY-RH MCL USED WITH C163032-0206 ---	1	
	B30278-2	TORQUE PLATE ASSY-RH MCL USED WITH C163032-0208 ---	1	
-28	B30113	PLATE ASSEMBLY-PRESSURE MCL ----------	1	
-29	B30026	LINING MCL ----------	2	
	A30087	RIVET MCL ----------	4	
-30	B30027	PLATE ASSEMBLY-BACK MCL ----------	2	
-31	B30026	LINING MCL ----------	1	
	A30087	RIVET MCL ----------	2	
-32	A1633-47	GASKET MCL ----------	1	
-33	A30169	FITTING-BLEEDER MCL ----------	1	
-34	A30085	FITTING-BLEEDER MCL ----------	1	
-35	A30040	CAP-DUST MCL ----------	1	

NOTE. *WHEELS & BRAKES SHOWN ON THIS FIGURE MUST NOT BE INTERMIXED WITH WHEELS & BRAKES SHOWN ON FIGURE 42A.

NOTE. %WHEN INITIALLY ORDERING THIS WHEEL ALSO ORDER ONE B30278-1 TORQUE PLATE FOR LH INSTL OR ONE B30278-2 TORQUE PLATE FOR RH INSTL.

NOTE. **PART NO. DESIGNATED FOR WHEELS MODIFIED IN FIELD TO MCCAULEY SERVICE BULLETIN W8-1, DATED 15 MAY 1974. WHEN ORDERING NEW WHEEL ASSEMBLY ORDER C163004-0101, OBSERVE NOTE %.

A---SERIAL 18502091 THRU 18502310
SERIAL 18052285 THRU 18052384

Alighting Gear (Cont)

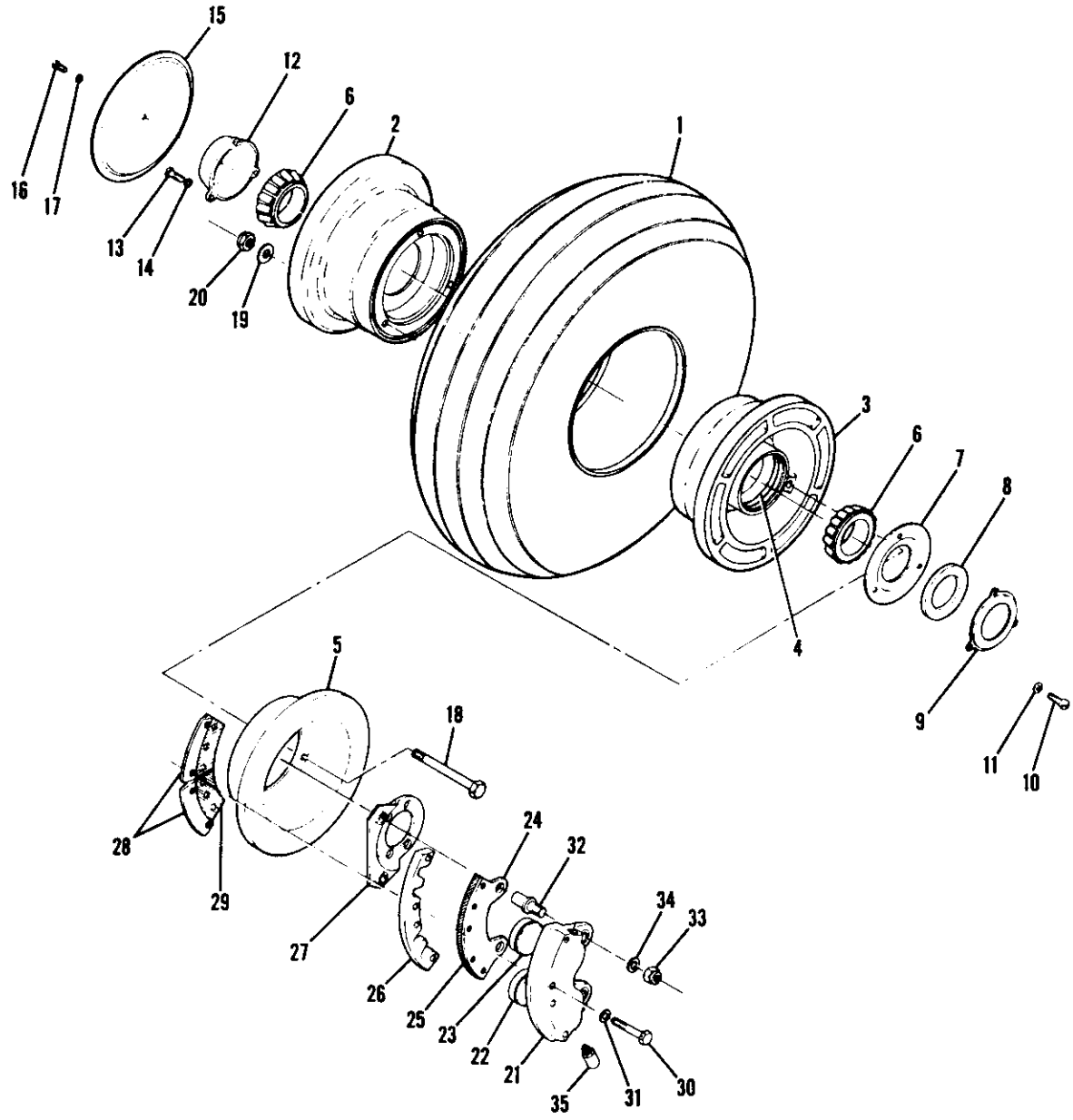

SERIAL 185-1150 THRU 185-1447
SERIAL 18051775 THRU 18051993

Figure 42C. Main Landing Gear Wheel & Brake Assembly-Crosswind

FIGURE AND INDEX NO.	PART NUMBER	DESCRIPTION 1 2 3 4 5 6 7	UNITS PER ASSY	USABLE ON CODE
42C-		WHEEL & BRAKE ASSEMBLY-MAIN LANDING GEAR CROSSWIND --------	NP	A
- 1	C262003-0204	TIRE 6.00X6 6 PLY ----------	1	
	C262003-0207	TIRE 8.00X6 6 PLY ----------	1	
	C262023-0102	TUBE 6.00X6 ----------	1	
	C262023-0104	TUBE 8.00X6 ----------	1	
	0441156-18	WHEEL ASSEMBLY CFP 40-66 ----------	1	
- 2	162-10	WHEEL HALF ASSEMBLY-OUTER CFP ----------	1	
- 3	161-25	WHEEL HALF ASSEMBLY-INNER CFP ----------	1	
- 4	13836	CUP-BEARING ----------	1	
- 5	164-7	BRAKE DISK ASSEMBLY CFP ----------	1	
- 6	13889	BEARING-CONE CFP ----------	1	
- 7	156-1	PLATE-GREASE SEAL CFP ----------	1	
- 8	39091	SEAL-FELT GREASE CFP ----------	1	
- 9	839094	RING-GREASE SEAL CFP ----------	1	
		ATTACHING PARTS		
-10	8-32X1/2	SCREW CFP ----------	3	
-11	1208	WASHER-LOCK CFP ----------	3	
		---*---		
-12	38520A	HUB CAP CFP ----------	1	
		ATTACHING PARTS		
-13	8-32X1/2	SCREW CFP ----------	3	
-14	1208	WASHER-LOCK CFP ----------	3	
		---*---		
-15	27-121	DUST SHIELD CFP ----------	1	
		ATTACHING PARTS		
-16	10-24X1/2	SCREW CFP ----------	1	
-17	1210	WASHER CFP ----------	1	
		---*---		
-18	AN4-40A	BOLT ----------	3	
-19	AN960-416	WASHER ----------	3	
-20	NAS679A4	NUT ----------	3	
	0741027-201	BRAKE ASSEMBLY-MAIN LANDING GEAR LH ----------	1	
	0741027-200	BRAKE ASSEMBLY-MAIN LANDING GEAR RH ----------	1	
-21	61-7	CYLINDER-BRAKE CFP ----------	1	
-22	3002	PISTON CFP ----------	2	
-23	AN6227B23	O-RING CFP ----------	2	
-24	73-4	PLATE ASSEMBLY-PRESSURE CFP ----------	1	
-25	3007	LINING CFP ----------	1	
	561	RIVET CFP ----------	6	
-26	68-7	SHIM CFP ----------	1	
-27	0742144-1	TORQUE PLATE ASSEMBLY-LH ----------	1	
	0742144-2	TORQUE PLATE ASSEMBLY-RH ----------	1	
-28	74-2	PLATE ASSEMBLY-BACK CFP ----------	2	
-29	3006	LINING CFP ----------	1	
	561	RIVET CFP ----------	3	
-30	AN4H16A	BOLT ----------	4	
-31	AN960-416L	WASHER ----------	4	
-32	3013	BOLT-ANCHOR CFP ----------	2	
-33	NAS679A6	NUT ----------	2	
-34	AN960-616L	WASHER ----------	2	
-35	183-1	CAP-BLEEDER CFP ----------	1	
	FC6446	SCREW-BLEEDER CFP ----------	1	
	37206	SEAT-BLEEDER CFP ----------	1	
	R561	RIVET SET KIT CFP ----------	1	
		A---SERIAL 185-1150 THRU 185-1447		
		SERIAL 18051775 THRU 18051993		

Alighting Gear (Cont)

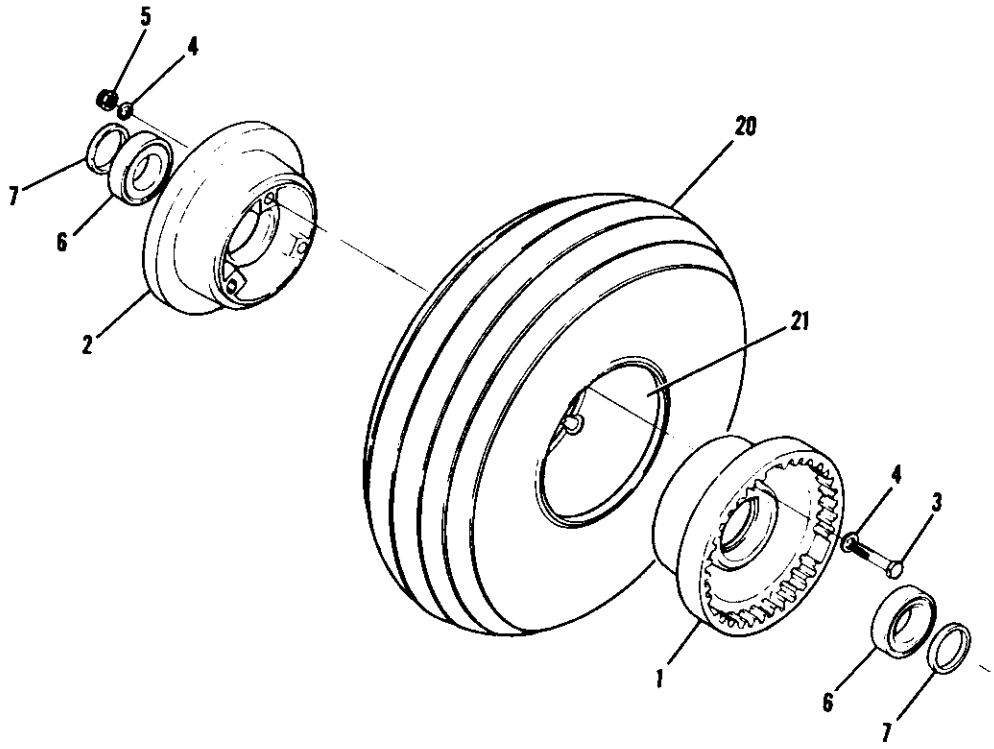

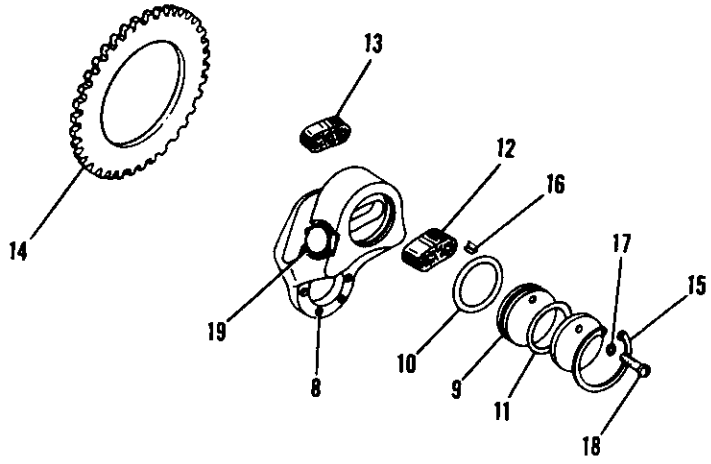

SERIAL 18051184 THRU 18051312

Figure 43. Main Landing Gear Wheel & Brake Assembly

FIGURE AND INDEX NO.	PART NUMBER	DESCRIPTION 1 2 3 4 5 6 7	UNITS PER ASSY	USABLE ON CODE
43 -		WHEEL & BRAKE ASSEMBLY-MAIN LANDING GEAR	NP	A
	0541183-9	WHEEL ASSEMBLY-MAIN LANDING GEAR GY9532522	1	
- 1	9524201	WHEEL SUB ASSEMBLY-INBOARD HALF GY	1	
- 2	9524318	WHEEL SUB ASSEMBLY-OUTBOARD HALF GY	1	
		ATTACHING PARTS		
- 3	AN4-13A	BOLT	3	
- 4	AN960-416	WASHER	6	
- 5	22FH428	NUT SPS	3	
		---*---		
- 6	13889	CONE-BEARING TIMKEN	2	
	13830 #	CUP-BEARING TIMKEN	1	
- 7	9524218	SEAL-BEARING GY	2	
	0541161-2	BRAKE ASSEMBLY GY9532181	1	
- 8	9541458 *	HOUSING-BRAKE GY	1	
	9521184	BUSHING GY	1	
- 9	9524223	PISTON GY	1	
-10	AN623082	O RING	1	
-11	AN623083	O RING	1	
-12	9511269	LINING-PISTON GY	1	
-13	9511271	LINING-PISTON GY	1	
-14	9532277	DISC-BRAKE GY	1	
	9524343	CYLINDER HEAD GY	1	
		ATTACHING PARTS		
-15	MS16625-212	RING-SNAP	1	
		---*---		
-16	9524463	CLIP-BRAKE GY	3	
-17	511846-4	SEAL-BLEEDER	1	
-18	AN502-10-6	SCREW	1	
-19	9520448	PLUG-DRAIN GY	1	
	MS28778-4	GASKET-DRAIN PLUG	1	
-20	C262003-0204	TIRE 6.00 X 6 6 PLY	1	
	C262003-0205	TIRE 7.00 X 6 4 PLY OPT	1	
	C262003-0207	TIRE 8.00X6 6 PLY OPT	1	
-21	C262023-0102	TUBE 6.00X6	1	
	C262023-0103	TUBE 7.00X6 OPT	1	
	C262023-0104	TUBE 8.00X6 OPT	1	

NOTE. *WHEN ORDERING THIS PART ALSO ORDER 9521184 BUSHING

NOTE. #13830 CUP-BEARING IS INCLUDED IN 9524201 & 9524318 WHEEL HALF SUB ASSEMBLIES

A---SERIAL 18051184 THRU 18051312

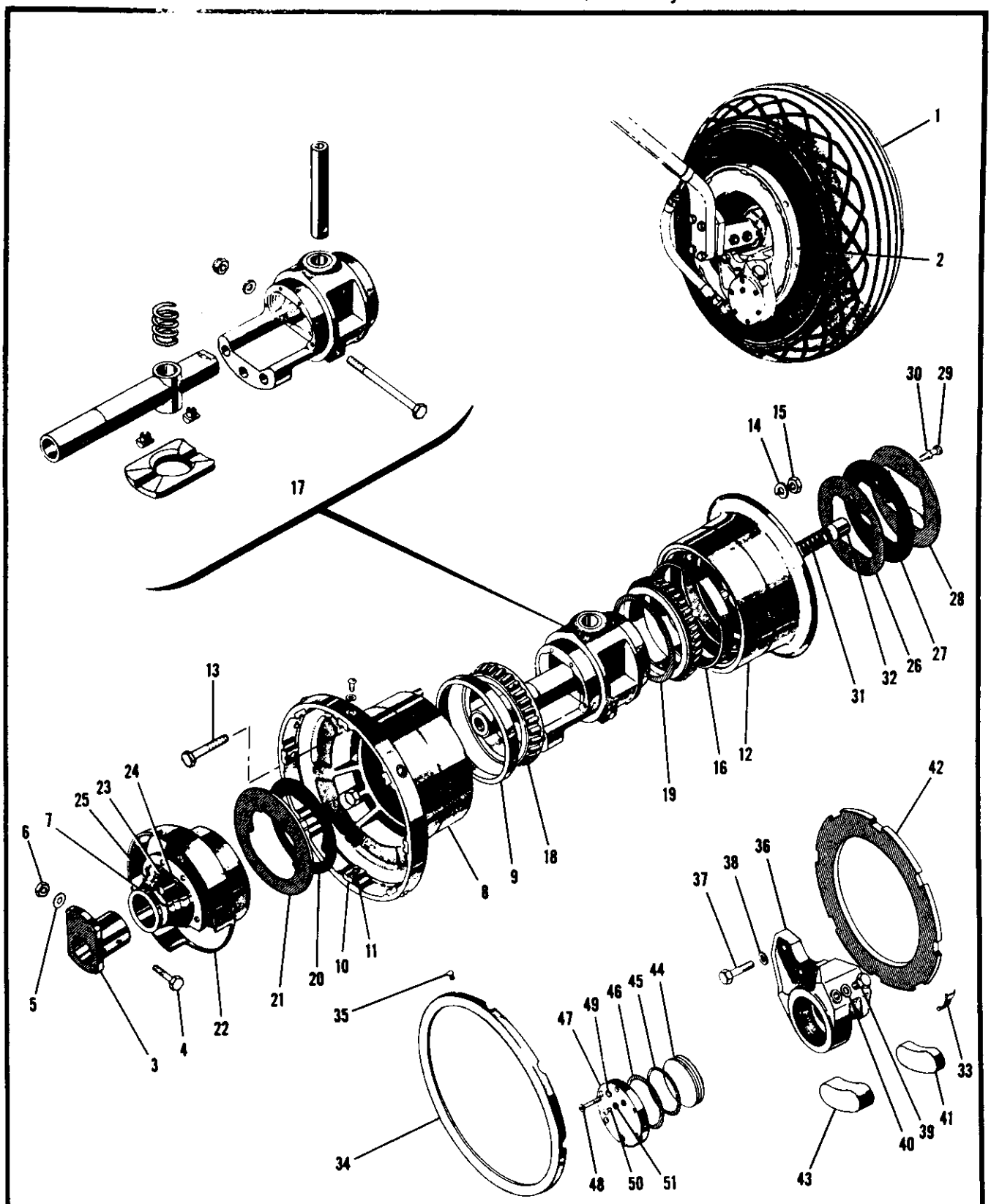

SERIAL 18051184 THRU 18051312

Figure 44. Crosswind Wheel and Brake Assembly

FIGURE AND INDEX NO.	PART NUMBER	DESCRIPTION 1 2 3 4 5 6 7	UNITS PER ASSY	USABLE ON CODE
44 -		WHEEL & BRAKE ASSEMBLIES-CROSSWIND LANDING GEAR	NP	A
- 1	0441016-24	TIRE 6.00 X 6 6 PLY	1	
	0441016-13	TUBE 6.00 X 6	1	
- 2	0441150-8	WHEEL, BRAKE & COLLAR ASSEMBLY-CROSSWIND LANDING GEAR LH	1	
	0441150-9	WHEEL, BRAKE & COLLAR ASSEMBLY-CROSSWIND LANDING GEAR RH	1	
- 3	0441150-2	COLLAR-CROSSWIND WHEEL AXLE LH	1	
	0441150-3	COLLAR-CROSSWIND WHEEL AXLE RH	1	
		ATTACHING PARTS		
- 4	0441151	BOLT	2	
- 5	AN960-616L	WASHER	2	
- 6	NAS679A6	NUT	2	
		---*---		
- 7	95-5242	CLAMP GY	1	
	0541116-2	WHEEL ASSEMBLY-CROSSWIND LH	1	
	0541116-3	WHEEL ASSEMBLY-CROSSWIND RH	1	
- 8	9510816	WHEEL SUB ASSEMBLY-INBOARD HALF	1	
- 9	95-5216	CUP-BEARING GY	1	
-10	9510871	KEY-DISC DRIVE GY	8	
		ATTACHING PARTS		
-11	9520644	SCREW	8	
	AN960-416L	WASHER	8	
		---*---		
-12	9510993	WHEEL SUB ASSEMBLY-OUTBOARD HALF GY	1	
		ATTACHING PARTS		
-13	AN4-45A	BOLT	4	
-14	AN960-416	WASHER	4	
-15	NAS679A4	NUT	4	
		---*---		
-16	95-5216	CUP-BEARING GY	1	
-17	9520061	HUB & AXLE ASSEMBLY GY	1	
-18	95-5217	CONE-BEARING GY	1	
-19	9510983	SHIM-PACK GY	1	
-20	9510978	PLATE-INBOARD BEARING SEAL GY	1	
-21	9510977	GASKET-BEARING SEAL GY	1	
-22	9530373	PLATE-DEFLECTOR LH GY	1	
	9530374	PLATE-DEFLECTOR RH GY	1	
		ATTACHING PARTS		
-23	AN515-6-8	SCREW	3	
-24	AN936A6	WASHER-LOCK	3	
		---*---		
-25	9520424	BODY-AXLE GY	1	
-26	9510966	PLATE-STABILIZER CAP GASKET GY	1	
-27	9510965	GASKET-STABILIZER CAP GY	1	
-28	9521246	CAP-STABILIZER GY	1	
		ATTACHING PARTS		
-29	MS20074-04-5	BOLT	2	
-30	AN935-416	WASHER-LOCK	2	
		---*---		
-31	9511005	SPRING-STABILIZER BRAKE GY	1	
-32	9510988	LINING-STABILIZER BRAKE GY	1	
-33	9520675	CLIP-ANTI RATTLE WITHOUT RETAINING RING GY	4	
	9511103	CLIP-ANTI RATTLE WITH RETAINING RING GY	4	
-34	9530593	RING-DISC RETAINING GY	1	
		ATTACHING PARTS		
-35	95-5383	FASTENER UC	4	
		---*---		
	0541116-26	BRAKE ASSEMBLY-LH	1	
	0541116-25	BRAKE ASSEMBLY-RH	1	
-36	0541116-28	HOUSING-LH	1	
	0541116-27	HOUSING-RH	1	
		ATTACHING PARTS		
-37	AN75A10	BOLT	3	
-38	AN960-516	WASHER	3	
		---*---		

CONTINUED ON NEXT PAGE

FIGURE AND INDEX NO.	PART NUMBER	DESCRIPTION 1 2 3 4 5 6 7	UNITS PER ASSY	USABLE ON CODE
44 -39	9520448	PLUG-INLET GY	1	
-40	MS28778B4	GASKET-INLET	2	
-41	9511271	LINING-BRAKE STATIONARY GY	1	
-42	9530084	DISC-ROTATING BRAKE GY	1	
-43	9510734	LINING-BRAKE PISTON SIDE GY	1	
-44	9510155	PISTON-BRAKE GY	1	
-45	AN623082	SEAL-PISTON	1	
-46	AN623083	SEAL-CYLINDER HEAD	1	
		ATTACHING PARTS		
-48	95-5163	SCREW GY	6	
-49	AN936C10	WASHER	6	
		---*---		
-50	AN505-8R5	SCREW-BLEEDER	1	
-51	9510957	SEAL-BLEEDER SCREW GY	1	
		A---SERIAL 18051184 THRU 18051312		

Alighting Gear (Cont)

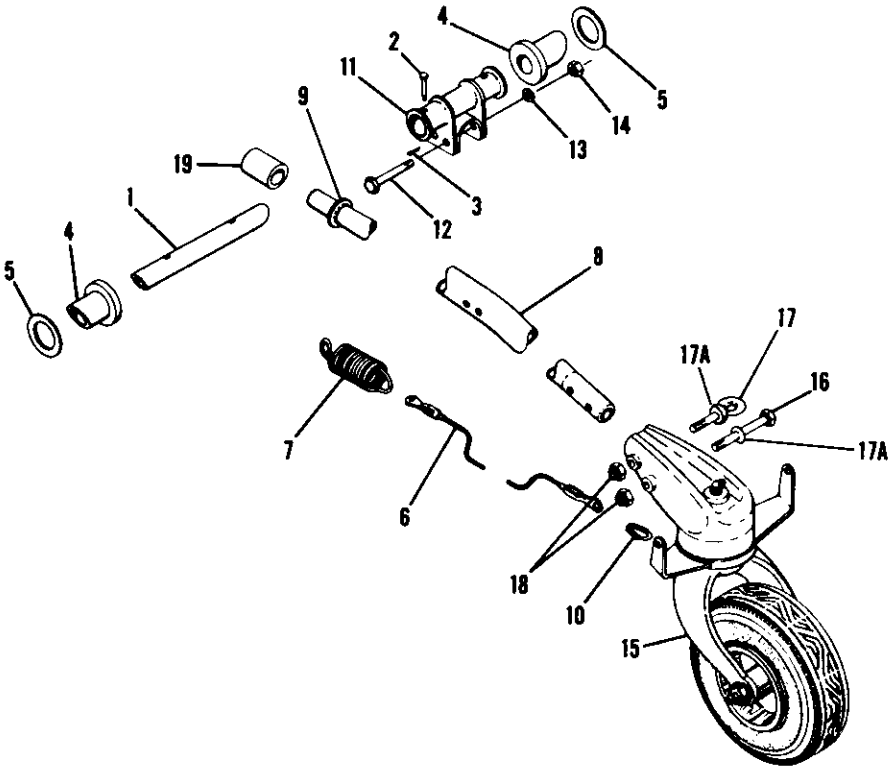

SERIAL 185-0001 THRU 185-0237
SERIAL 18051184 THRU 18052384

Figure 45. Tail Wheel Installation

FIGURE AND INDEX NO.	PART NUMBER	DESCRIPTION 1 2 3 4 5 6 7	UNITS PER ASSY	USABLE ON CODE
45 -		TAILWHEEL INSTALLATION	NP	A
- 1	0742100-5	TUBE-TAILWHEEL MOUNTING	1	
		ATTACHING PARTS		
- 2	MS20392-1C33	PIN-CLEVIS	2	
- 3	MS24665-132	PIN-COTTER	2	
		---*---		
- 4	0742112	BUSHING	2	
- 5	0742100-6	WASHER	AR	
- 6	0510105-196	CABLE ASSEMBLY SEE FIGURE 98	2	B
	0510105-153	CABLE ASSEMBLY SEE FIGURE 99	2	G
	0510105-323	CABLE ASSEMBLY SEE FIGURE 99	2	H
- 7	0742200-5	SPRING	2	
- 8	0742100-11	SUB ASSEMBLY-SPRING WEU 0742100-19	1	B
	0742100-19	SPRING	1	B
	0742100-9	SUB ASSEMBLY-SPRING WEU 0742100-18	1	C
	0742100-18	SPRING	1	C
	0742100-15	SUB ASSEMBLY-SPRING WEU 0742100-20	1	F
	0742100-20	SPRING	1	F
	1642000-4	SPRING ASSY WEU 1642000-18	1	Q
	1642000-18	SPRING ASSY	1	R
	13-8760	STOPPER-RUBBER	1	N
- 9	0742100-8	RETAINER-HOSE	1	M
	0742147-3	RETAINER-HOSE	1	P
-10	0742200-6	LINK	2	
-11	0742102	FITTING-SPRING	1	M
	0742146-1	FITTING-SPRING	1	N
		ATTACHING PARTS		
-12	AN5-21A	BOLT	2	
-13	AN960-516	WASHER	2	
-14	NAS679A5	NUT	2	
		---*---		
-15	0742122-4	TAILWHEEL ASSEMBLY SEE FIGURE 47	1	B
	0742400	TAILWHEEL ASSEMBLY SEE FIGURE 48	1	D
	0742400-13	TAILWHEEL ASSEMBLY SEE FIGURE 48A	1	E
	0742101-4	TAILWHEEL ASSEMBLY SEE FIGURE 48B	1	F
	0742147-5	TAILWHEEL ASSEMBLY SEE FIGURE 48B	1	N
		ATTACHING PARTS		
-16	AN5-27A	BOLT	1	
-17	AN5-22A	BOLT	1	K
	0742145-1	RING-TIE DOWN	1	L
-17A	AN960-516	WASHER	4	
-18	NAS679A5	NUT	2	
		---*---		
-19	S51-12	HOSE-1.75 IN LG BULK ITEM REF S51-12-7	1	

A---SERIAL 185-0001 THRU 185-0237
SERIAL 18051184 THRU 18052384
B---SERIAL 185-0001 THRU 185-0237
C---SERIAL 18051184 THRU 18051312
D---SERIAL 18051184 THRU 18051262
E---SERIAL 18051263 THRU 18051312
F---SERIAL 18051313 THRU 18051847
G---SERIAL 18051184 THRU 18051410
H---SERIAL 18051411 THRU 18052384
K---SERIAL 185-0001 THRU 185-0237
SERIAL 18051184 THRU 18051530
L---SERIAL 18051531 THRU 18052384
M---SERIAL 185-0001 THRU 185-0237
SERIAL 18051184 THRU 18051847
N---SERIAL 18051848 THRU 18052384
P---SERIAL 18051848 THRU 18052137
Q---SERIAL 18051848 THRU 18052335
R---SERIAL 18052336 THRU 18052384

Alighting Gear (Cont)

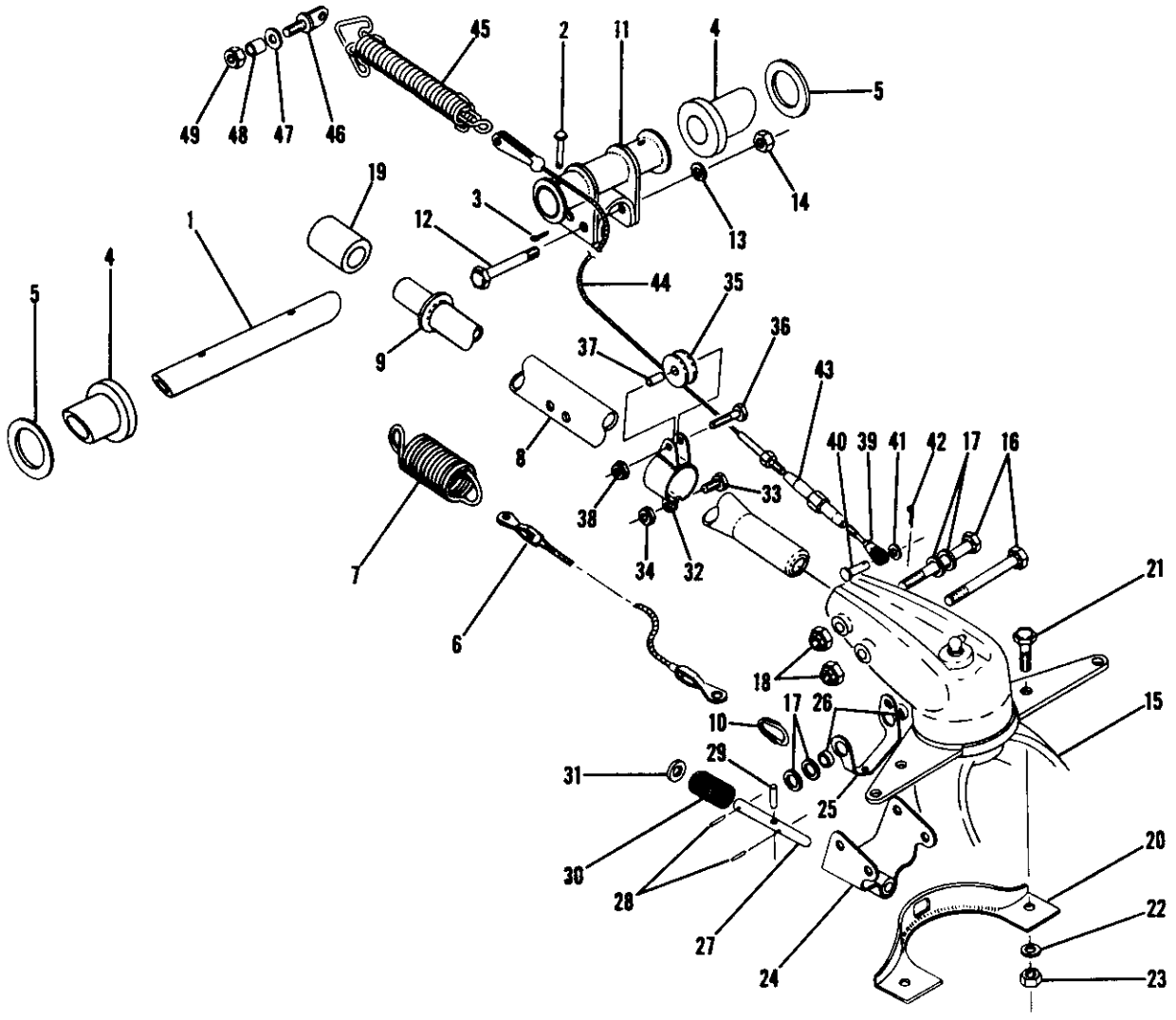

SERIAL 185-0238 THRU 185-0502

Figure 46. Tail Wheel Installation-Anti-Swivel

FIGURE AND INDEX NO.	PART NUMBER	DESCRIPTION 1 2 3 4 5 6 7	UNITS PER ASSY	USABLE ON CODE
46 -		TAILWHEEL INSTALLATION-ANTI-SWIVEL	NP	A
- 1	0742100-5	TUBE-TAILWHEEL SPRING MOUNTING	1	
		ATTACHING PARTS		
- 2	MS20392-1C33	PIN-CLEVIS	2	
- 3	MS24665-132	PIN-COTTER	2	
		---*---		
- 4	0742112	BUSHING	2	
- 5	0742100-6	WASHER	AR	
- 6	0510105-199	CABLE ASSEMBLY SEE FIGURE 98	2	
- 7	0310280	SPRING	2	
- 8	0742100-15	SUB ASSEMBLY-SPRING WEU 0742100-20	1	
	0742100-20	SPRING	1	
- 9	0742100-8	RETAINER-HOSE USED WITH 0742100-15 ONLY	1	
-10	0742200-6	LINK	2	
-11	0742102	FITTING-SPRING	1	
		ATTACHING PARTS		
-12	AN5-21A	BOLT	2	
-13	AN960-516	WASHER	2	
-14	NAS679A5	NUT	2	
		---*---		
-15	0742122-4	TAILWHEEL ASSEMBLY SEE FIGURE 47	1	
		ATTACHING PARTS		
-16	AN5-31A	BOLT	2	
-17	AN960-516	WASHER	4	
-18	NAS679A5	NUT	2	
		---*---		
-19	S51-12	HOSE-1.75 IN LG BULK ITEM REF S51-12-7	1	
-20	0742125-5	COLLAR ASSEMBLY	1	
		ATTACHING PARTS		
-21	AN4-6A	BOLT	2	
-22	AN960-416	WASHER	2	
-23	NAS679A4	NUT	2	
		---*---		
-24	0742126-1	BRACKET ASSEMBLY	1	
-25	0742127-1	BELLCRANK	1	
-26	0742128-1	SPACER	2	
-27	0742129-1	PIN-LOCK	1	
-28	NAS561P4-8	PIN	2	
-29	NAS561P4-10	PIN	1	
-30	0742130-1	SPRING	1	
-31	AN960-516	WASHER	1	
-32	0742131-1	CLAMP ASSEMBLY	1	
		ATTACHING PARTS		
-33	AN4-6A	BOLT	1	
-34	NAS679A4	NUT	1	
		---*---		
-35	S394	PULLEY	1	
		ATTACHING PARTS		
-36	AN3-7A	BOLT	1	
-37	0512138-1	BUSHING	1	
-38	MS21044N3	NUT	1	
		---*---		
-39	AN161-8LS	FORK	1	
		ATTACHING PARTS		
-40	MS20392-2C11	PIN	1	
-41	AN960-10L	WASHER	1	
-42	MS24665-132	PIN-COTTER	1	
		---*---		
-43	AN155B8S	BARREL-TURNBUCKLE	1	
-44	0742132-1	CABLE ASSEMBLY	1	
-45	0742134-1	SPRING	1	
		ATTACHING PARTS		
-46	AN43B10A	BOLT-EYE	1	
-47	AN960-416	WASHER	1	
-48	NAS43HT4-24	SPACER	1	
-49	NAS679A4	NUT	1	
		---*---		
		A---SERIAL 185-0238 THRU 185-0502		

Alighting Gear (Cont)

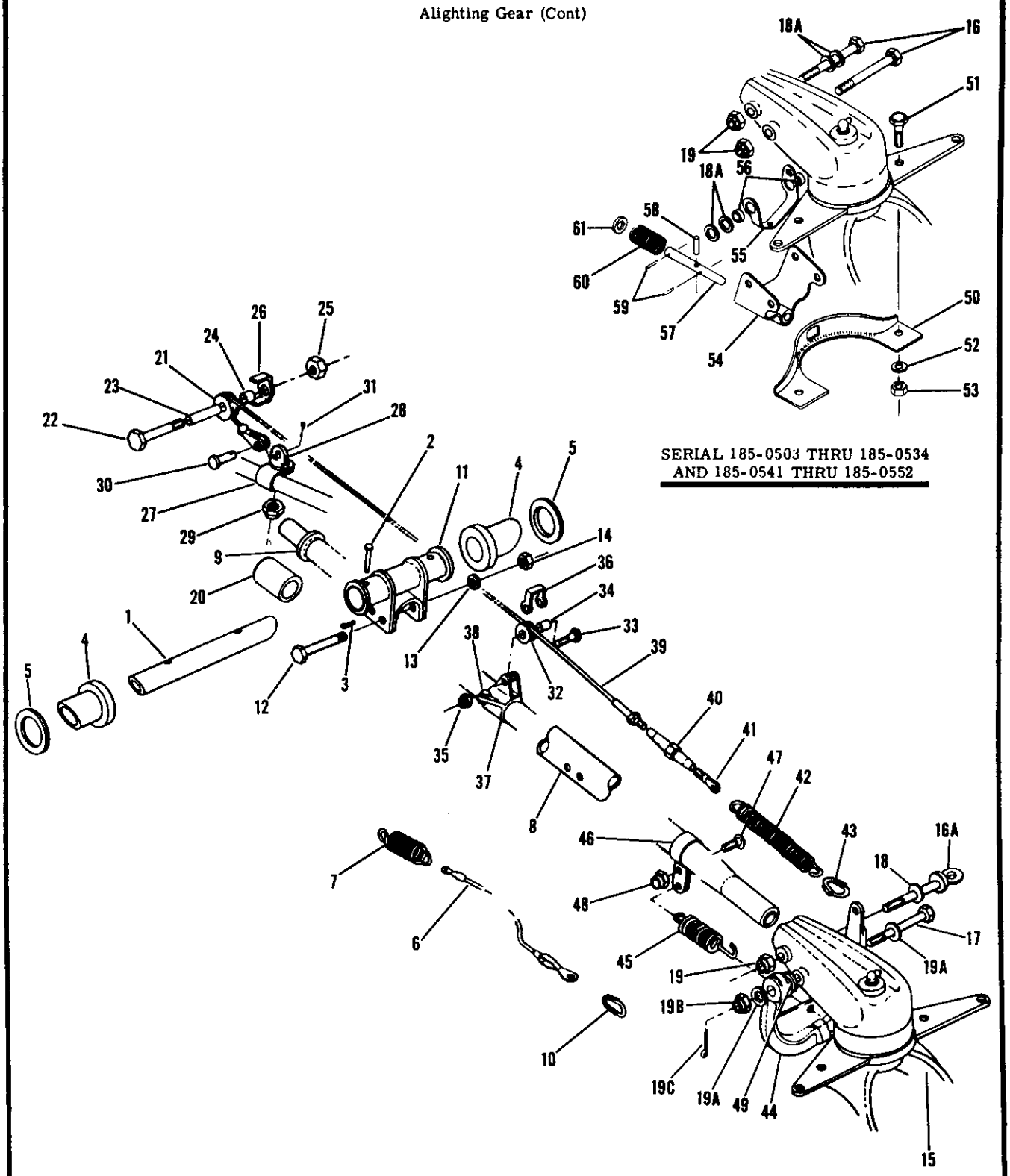

SERIAL 185-0503 THRU 185-0653

Figure 46A. Tailwheel Installation - Anti - Swivel

FIGURE AND INDEX NO.	PART NUMBER	DESCRIPTION 1 2 3 4 5 6 7	UNITS PER ASSY	USABLE ON CODE
46A-		TAIL WHEEL INSTALLATION-ANTI-SWIVEL	NP	A
- 1	0742100-5	TUBE-TAILWHEEL SPRING MOUNTING	1	
		ATTACHING PARTS		
- 2	MS20392-1C33	PIN-CLEVIS	2	
- 3	MS24665-132	PIN-COTTER	2	
		---*---		
- 4	0742112	BUSHING	2	
- 5	0742100-6	WASHER	AR	
- 6	0510105-199	CABLE ASSEMBLY SEE FIGURE 98	2	
- 7	0742200-5	SPRING	2	
- 8	0742100-15	SUB ASSEMBLY-SPRING WEU 0742100-20	1	
	0742100-20	SPRING	1	
- 9	0742100-8	RETAINER-HOSE USED WITH 0742100-15 ONLY	1	
-10	0742200-6	LINK	2	
-11	0742102	FITTING-SPRING	1	
		ATTACHING PARTS		
-12	AN5-21A	BOLT	2	
-13	AN960-516	WASHER	2	
-14	NAS679A5	NUT	2	
		---*---		
-15	0742122-4	TAILWHEEL ASSEMBLY SEE FIGURE 47	1	B
	0742122-5	TAILWHEEL ASSEMBLY SEE FIGURE 47	1	C
		ATTACHING PARTS		
-16	AN5-31A	BOLT	2	B
-16A	0742145-1	RING-TIE DOWN	1	C
-17	AN5-36 *	BOLT	1	C
-18	AN960-516	WASHER	2	C
-18A	AN960-516	WASHER	4	B
-19	NAS679A5	NUT	2	B
	NAS679A5	NUT	1	C
-19A	AN960-516L *	WASHER	2	C
-19B	MS35692-522 *	NUT	1	C
-19C	MS24665-134 *	PIN-COTTER	1	C
		---*---		
-20	S51-12	HOSE-1.75 IN LG BULK ITEM REF S-51-12-7	1	
-21	S394	PULLEY	1	
		ATTACHING PARTS		
-22	AN3-15A	BOLT	1	
-23	0512138-2	BUSHING	1	
-24	NAS43HT4-12	SPACER	1	
-25	MS21044N3	NUT	1	
		---*---		
-26	0742138-1	GUARD	1	
-27	0742137-4	CLAMP	1	
		ATTACHING PARTS		
-28	AN4284A	BOLT	1	
-29	MS21044N3	NUT	1	
		---*---		
-30	MS24665-132	PIN	1	
-31	MS20392-2C7	PIN-COTTER	1	
-32	S394	PULLEY	1	
		ATTACHING PARTS		
-33	AN3-7A	BOLT	1	
-34	0512138-1	BUSHING	1	
-35	MS21044N3	NUT	1	
		---*---		
-36	0742138-3	GUARD	1	
-37	0742137-1	CLAMP ASSEMBLY	1	
		ATTACHING PARTS		
-38	AN4-10A	BOLT	1	
	NAS679A4	NUT	1	
		---*---		
-39	0742139-1	CABLE ASSEMBLY	1	B
	0742139-4	CABLE ASSEMBLY	1	C
-40	AN155B8S	BARREL	1	
-41	AN165-8LS	EYE	1	
-42	0742136-1	SPRING	1	
-43	0742200-6	LINK	1	

CONTINUED ON NEXT PAGE

FIGURE AND INDEX NO.	PART NUMBER	DESCRIPTION 1 2 3 4 5 6 7	UNITS PER ASSY	USABLE ON CODE
46A-44	3426 *	BELLCRANK SCA	1	C
-45	3477 *	SPRING SCA	1	C
-46	3478 *	CLAMP SCA	1	C
		ATTACHING PARTS		
-47	AN515-6R5 *	SCREW	1	C
-48	NAS679A06	NUT	1	C
		---*---		
-49	3476 *	BUSHING SCA	2	C
-50	0742125-5	COLLAR ASSEMBLY	1	B
		ATTACHING PARTS		
-51	AN4-6A	BOLT	2	B
-52	AN960-416	WASHER	2	B
-53	NAS679A4	NUT	2	B
		---*---		
-54	0742126-1	BRACKET ASSEMBLY	1	B
-55	0742127-1	BELLCRANK	1	B
-56	0742128-1	SPACER	1	B
-57	0742129-1	PIN-LOCK	1	B
-58	NAS561P4-10	PIN	1	B
-59	NAS561P4-8	PIN	2	B
-60	0742130-1	PIN	1	B
-61	AN960-516	WASHER	1	B

NOTE. *THESE PARTS ARE PART OF 0742122-5 TAILWHEEL ASSEMBLY. SEE FIGURE 47.

A---SERIAL 185-0503 THRU 185-0653
B---SERIAL 185-0503 THRU 185-0534 & 185-0541 THRU 185-0552
C---SERIAL 185-0535 THRU 185-0540 & 185-0553 THRU 185-0653

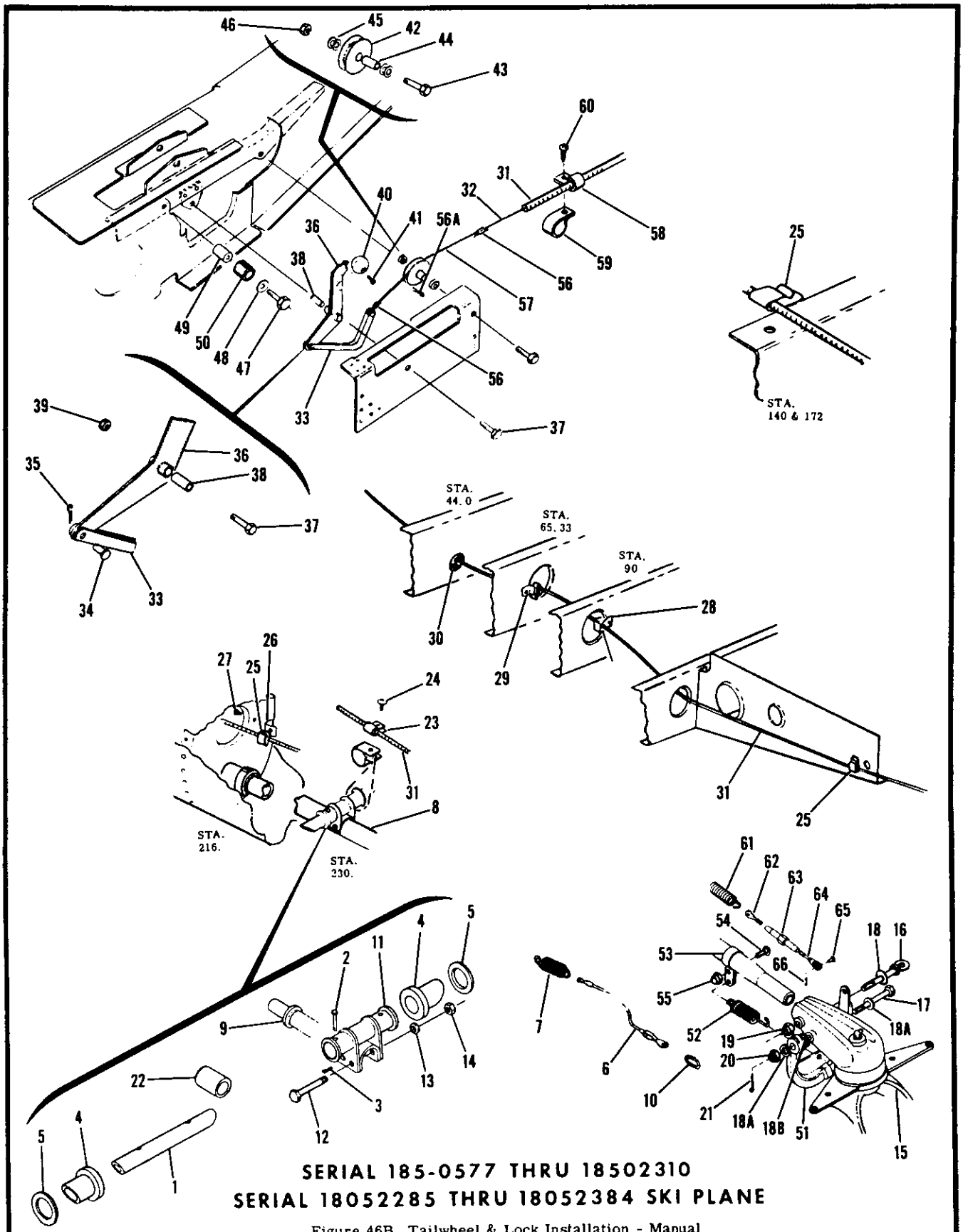

SERIAL 185-0577 THRU 18502310
SERIAL 18052285 THRU 18052384 SKI PLANE

Figure 46B. Tailwheel & Lock Installation - Manual

FIGURE AND INDEX NO.	PART NUMBER	DESCRIPTION 1 2 3 4 5 6 7	UNITS PER ASSY	USABLE ON CODE
46B-		TAILWHEEL AND LOCK INSTALLATION-MANUAL	NP	A
- 1	0742100-5	TUBE-TAILWHEEL SPRING MOUNTING	1	
		ATTACHING PARTS		
- 2	MS20392-1C33	PIN-CLEVIS	2	
- 3	MS24665-132	PIN-COTTER	2	
		---*---		
- 4	0742112	BUSHING	2	
- 5	0742100-6	WASHER	AR	
- 6	0510105-199	CABLE ASSEMBLY SEE FIGURE 98	2	D
	0510105-323	CABLE ASSEMBLY SEE FIGURE 98 & 99	2	E
- 7	0742200-5	SPRING	2	
- 8	0742100-15	SUB ASSEMBLY-SPRING WEU 0742100-20	1	F
	0742100-20	SPRING	1	F
	1642000-4	SPRING ASSY WEU 1642000-18	1	J
	1642000-18	SPRING ASSY	1	K
	13-8760	STOPPER-RUBBER	1	G
- 9	0742100-8	RETAINER-HOSE USED WITH 0742100-15 ONLY	1	F
	0742147-3	RETAINER-HOSE USED WITH 0742147-4	1	H
-10	0742200-6	LINK	2	
-11	0742102	FITTING-SPRING	1	F
	0742146-1	FITTING-SPRING	1	G
		ATTACHING PARTS		
-12	AN5-21A	BOLT	2	
-13	AN960-516	WASHER	2	
-14	NAS679A5	NUT	2	
		---*---		
-15	0742122-5	TAILWHEEL ASSEMBLY SEE FIGURE 47	1	B
	0742101-3	TAILWHEEL ASSEMBLY SEE FIGURE 48B	1	C
	0742147-6	TAILWHEEL ASSEMBLY SEE FIGURE 48B	1	G
		ATTACHING PARTS		
-16	0742145-1	RING-TIE DOWN	1	
-17	AN5-36 *	BOLT	1	
-18	AN960-516	WASHER	2	
-18A	AN960-516L *	WASHER	2	
-18B	3476 *	BUSHING SCA	2	
-19	NAS679A5	NUT	1	
-20	MS35692-522 *	NUT	1	
-21	MS24665-134 *	PIN-COTTER	1	
		---*---		
-22	S51-12	HOSE-1.75 IN LG BULK ITEM REF S51-12-7	1	
-23	MS21919DG3	CLAMP	1	
	MS21919DG5	CLAMP	1	
-24	S1021Z10-6	SCREW	1	
-25	C23150-017-4	CLIP TIN	1	
-26	S1154-1	BRACKET	1	
-27	S1021Z8-6	SCREW	1	
-28	S1592-18	HARNESS BAND	1	
	S1021Z6-8	SCREW	1	
-29	MS21919DG3	CLAMP	1	
	S1153-1	BRACKET	2	
	S1021Z8-6	SCREW	1	
-30	MS35489-8	GROMMET	1	
-31	S1398-2-218.00	CASING-CONTROL WIRE	1	
-32	0710639-5	CONTROL WIRE	1	
-33	0711687-2	CONNECTOR ASSEMBLY		
		ATTACHING PARTS		
-34	MS20392-2C7	PIN-FLATHEAD	1	
-35	MS24665-132	PIN-COTTER	1	
		---*---		
-36	0711687-3	LEVER ASSEMBLY	1	
		ATTACHING PARTS		
-37	AN4-12	BOLT	1	
-38	NAS76A4-024	BUSHING	1	
-39	NAS679A4	NUT	1	
		---*---		
-40	S1249-1	KNOB	1	
		ATTACHING PARTS		
-41	AN507-1032R12	SCREW	1	
		---*---		
-42	0711687-6	PULLEY	1	
		ATTACHING PARTS		
-43	AN4-12	BOLT	1	

CONTINUED ON NEXT PAGE

FIGURE AND INDEX NO.	PART NUMBER	DESCRIPTION 1 2 3 4 5 6 7	UNITS PER ASSY	USABLE ON CODE
468-44	NAS43HT4-41	SPACER	1	
-45	AN960-616	WASHER	2	
	AN960-616L	WASHER	1	
-46	NAS679A4	NUT	1	
		---*---		
-47	AN3-7A	BOLT-STOP	1	
-48	AN960PD10L	WASHER	1	
-49	NAS43HT4-41	SPACER	1	
-50	S1495-6	HOSE-00.50 IN LG BULK ITEM REF S1495-6-00.50	1	
	MS21044N3	NUT	1	
-51	3426 *	BELLCRANK SCA	1	
-52	3477 *	SPRING SCA	1	
-53	3478 *	CLAMP SCA	1	F
	3478-1 *	CLAMP SCA	1	G
		ATTACHING PARTS		
-54	AN515-6R5 *	SCREW	1	
-55	NAS679A06	NUT	1	
		---*---		
-56	S1958-1	SLEEVE	2	
-56A	MS24665-287	PIN-COTTER CABLE GUARD	1	
-57	0710639-2	CABLE	1	
-58	MS21919DG3	CLAMP	1	
-59	S1485D9U	CLAMP	1	
-60	S1021Z8-6	SCREW	1	
-61	0742136-1	SPRING	1	
-62	AN165-8LS	EYE	1	
-63	AN155B8S	BARREL	1	
-64	AN161-8RS	FORK	1	
		ATTACHING PARTS		
-65	MS20392-2C9	PIN	1	
-66	MS24665-132	PIN-COTTER	1	
		---*---		

NOTE. *THESE PARTS ARE PART OF 0742122-5, 0742147-6, & 0742101-3 TAILWHEEL ASSEMBLIES. SEE FIGURES 47 & 48B.

A---SERIAL 185-0577 THRU 18502310
SERIAL 18052285 THRU 18052384 SKI PLANE
B---SERIAL 185-0577 THRU 185-0653
C---SERIAL 185-0654 THRU 185-1206
D---SERIAL 185-0577 THRU 185-0768
E---SERIAL 185-0769 THRU 18502310
SERIAL 18052285 THRU 18052384 SKI PLANE
F---SERIAL 185-0577 THRU 185-1206
G---SERIAL 185-1207 THRU 18502310
SERIAL 18052285 THRU 18052384 SKI PLANE
H---SERIAL 185-1207 THRU 18501684
J---SERIAL 185-1207 THRU 18502202
K---SERIAL 18502203 THRU 18502310

FIGURE AND INDEX NO.	PART NUMBER	DESCRIPTION 1 2 3 4 5 6 7	UNITS PER ASSY	USABLE ON CODE
47 -	0742122-4	TAIL WHEEL ASSEMBLY-10 IN. PNEUMATIC	1	A
	0742122-5	TAIL WHEEL ASSEMBLY-10 IN. PNEUMATIC	1	B
- 1	3412-1	BRACKET ASSEMBLY SCA	1	
- 2	19118	FITTING-LUBRICATION AL	1	
	08231 *	CUP-BEARING TI	1	
- 3	3423-1	FORK ASSEMBLY SCA	1	A
	3423-3	FORK ASSEMBLY SCA	1	B
		ATTACHING PARTS		
- 4	MS24665-283	PIN-COTTER	1	
- 5	AN320-8	NUT	1	
- 6	AN960-816	WASHER	1	
		---*---		
	A4138 *	CUP-BEARING TI	1	
- 7	3226	PIN SCA	1	A
	52-048-250-0375	PIN-ROLL EN	1	B
- 7A	3427	COLLER-LOCKING SCA	1	B
- 7B	AN510-10R7	SCREW	3	B
- 8	08118 *	CONE-BEARING TI	1	
- 9	3411	DUST CAP SET SCA	1	A
	3411-3	DUST CAP SET SCA	1	B

CONTINUED ON PAGE 115

Alighting Gear (Cont)

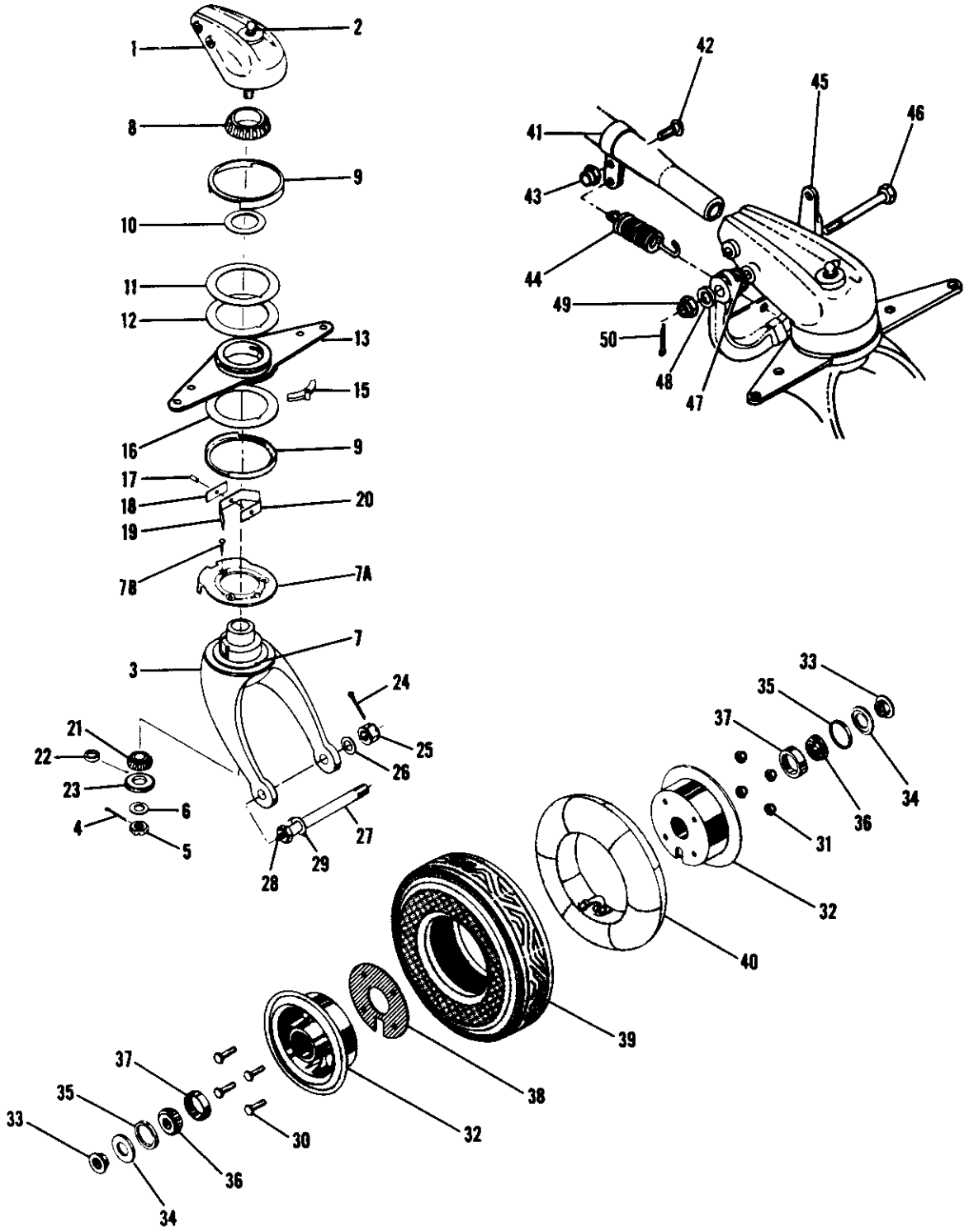

SERIAL 185-0001 THRU 185-0653

Figure 47. Tailwheel Assembly

FIGURE AND INDEX NO.	PART NUMBER	DESCRIPTION 1 2 3 4 5 6 7	UNITS PER ASSY	USABLE ON CODE
47 -10	3407	SPACER SCA	AR	
-11	3408	WASHER-STEEL SCA	1	
-12	3408-1	WASHER-PHENOLITE SCA	AR	
	3408-2	WASHER-PHENOLITE SCA	AR	
-13	3410-5	ARM ASSEMBLY SCA	1	
-14		DELETED, NEVER USED		
-15	3219	PAWL SCA	1	
-16	3408-2	WASHER SCA	AR	
-17	3257	PIN-STAKING SCA	1	
-18	3433	SPACER-SPRING SCA	1	
-19	3432	SPRING SCA	1	
-20	3433-1	SPACER-SPRING SCA	1	A
	3258	SPACER SCA	AR	B
	3258-1	SPACER SCA	AR	B
-21	A4050 #	CONE-BEARING TI	1	
-22	2504-1	SPACER SCA	1	
-23	1863	RETAINER-GREASE SCA	1	
	3245-1	WHEEL & TIRE ASSEMBLY 10 INCH SCA	1	
		ATTACHING PARTS		
-24	MS24665-283	PIN-COTTER	1	
-25	AN310-8	NUT	1	
-26	AN960-816L	WASHER	1	
-27	3236C2	AXLE ASSEMBLY SCA	1	
-28	MS15001-1	FITTING-LUBRICATION	1	
-29	3225	WASHER-LOCK SCA	1	
		---*---		
-30	AN4-7A	BOLT	4	
-31	NAS679A4	NUT	4	
-32	2598	HUB-WHEEL SCA	2	
-33	3227	SPACER SCA	2	
-34	1863	RETAINER-GREASE SCA	2	
-35	1862	SPACER-GREASE RETAINER SCA	2	
	0442006-11	BEARING SET ASSEMBLY	2	
-36	A4050	CONE-BEARING TI	1	
-37	A4138	CUP-BEARING TI	1	
-38	2602	GASKET SCA	1	
-39	3246	TIRE-PNEUMATIC 10 X 3.50-4 SCA	1	
-40	3247	TUBE-PNEUMATIC 10 X 3.50 SCA	1	
-41	3478	CLAMP SCA	1	B
		ATTACHING PARTS		
-42	AN515-6R5	SCREW	1	B
-43	NAS679A06	NUT	1	B
		---*---		
-44	3477	SPRING SCA	1	B
-45	3426	BELLCRANK SCA	1	B
-46	AN5-36	BOLT	1	B
-47	3476	BUSHING SCA	2	B
-48	AN960-516L	WASHER	2	B
-49	MS35692-522	NUT	1	B
-50	MS24665-134	PIN-COTTER	1	B

NOTE. *FOR COMPLETE BEARING SET CONSISTING OF 08118 CONE AND 08231 CUP, ORDER 0742400-12.

NOTE. #FOR COMPLETE BEARING SET CONSISTING OF A4050 CONE AND A4138 CUP, ORDER 0442006-11.

A---SERIAL 185-0001 THRU 185-0534 & 185-0541 THRU 185-0552
B---SERIAL 185-0535 THRU 185-0540 & 185-0553 THRU 185-0653

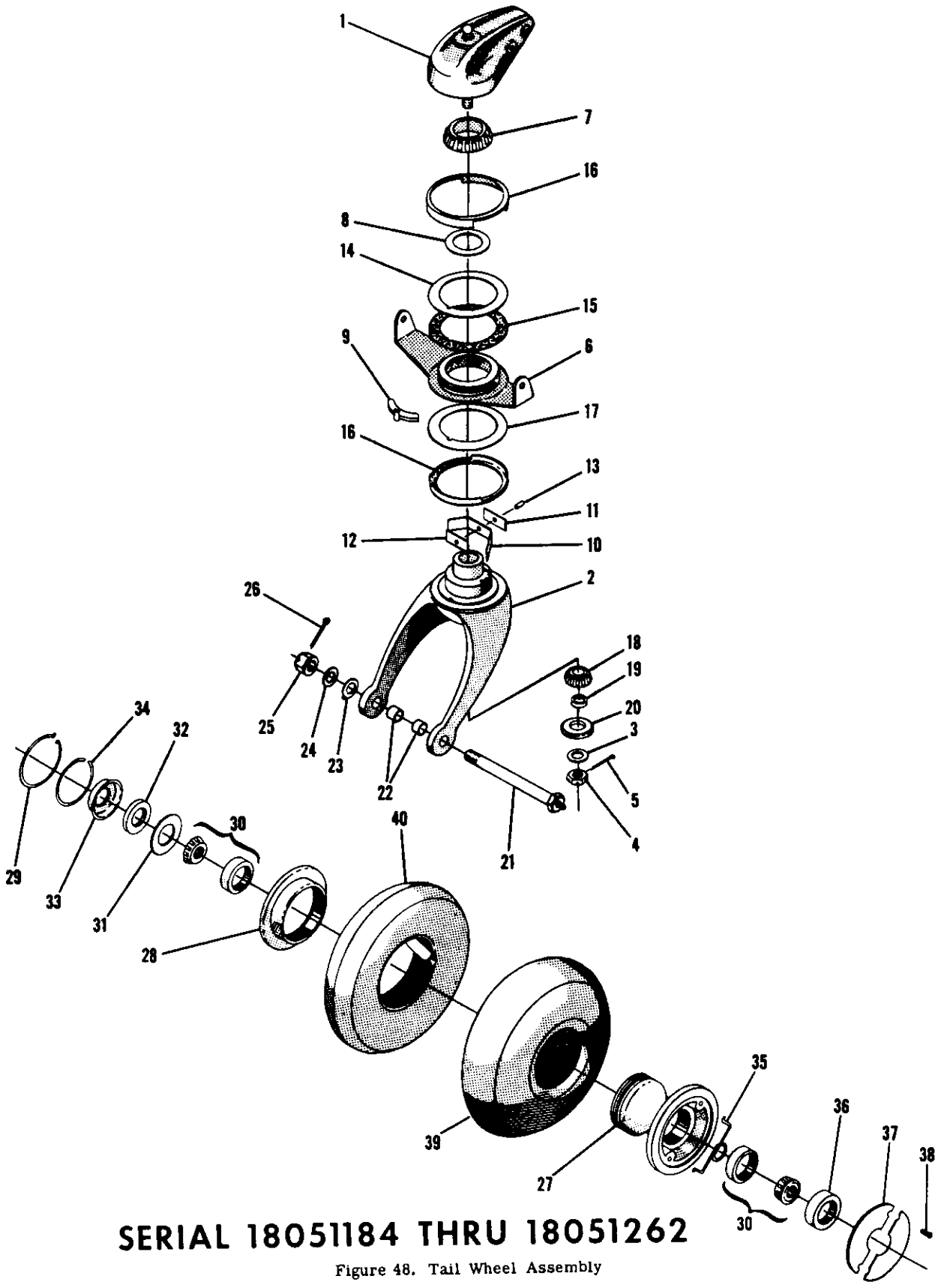

SERIAL 18051184 THRU 18051262

Figure 48. Tail Wheel Assembly

FIGURE AND INDEX NO.	PART NUMBER	DESCRIPTION 1 2 3 4 5 6 7	UNITS PER ASSY	USABLE ON CODE
48 -	0742400	TAIL WHEEL ASSEMBLY	1	A
	0742400-10	FORK & BRACKET ASSEMBLY-TAIL WHEEL	1	
- 1	3412	BRACKET ASSEMBLY SCA	1	
	19118	FITTING-LUBRICATION AL	1	
	08231 #	CUP-BEARING TI	1	
- 2	3413	FORK ASSEMBLY SCA		
		ATTACHING PARTS		
- 3	AN960-816	WASHER	1	
- 4	AN320-8	NUT	1	
- 5	MS24665-283	PIN-COTTER	1	
		---*---		
	A4138 *	CUP-BEARING TI	1	
	3226	PIN SCA	1	
- 6	3410-3	ARM ASSEMBLY SCA	1	
- 7	08118 #	CONE-BEARING TI	AR	
- 8	3407	SPACER SCA	1	
- 9	3219	PAWL SCA	1	
-10	3222	SPRING SCA	1	
-11	3258	SPACER-SPRING SCA	1	
-12	3258-1	SPACER-SPRING SCA	1	
-13	3257	PIN-STAKING SCA	1	
-14	3408	WASHER-STEEL SCA	1	
-15	3408-1	WASHER-FORMICA SCA	1	
-16	3411	DUST CAP SET SCA	1	
-17	3408-2	WASHER SCA	1	
-18	A4050 *	CONE-BEARING TI	1	
-19	2504-1	SPACER SCA	1	
-20	1863	RETAINER-GREASE	1	
	0742401	WHEEL & TIRE ASSEMBLY WHEN EXHAUSTED USE 2600	1	
	2600	WHEEL & TIRE ASSEMBLY SCA SEE FIGURE 48A	1	
		ATTACHING PARTS		
-21	3236C2	AXLE ASSEMBLY	1	
-22	0742400-11	BUSHING	2	
-23	3225	WASHER-LOCK SCA	1	
-24	AN960-816	WASHER	1	
-25	AN310-8	NUT	1	
-26	MS24665-283	PIN-COTTER	1	
	AN960-816	WASHER USE WITH 2600 WHEEL & TIRE ASSEMBLY ONLY	4	
		---*---		
	0742401-1	WHEEL ASSEMBLY	1	
-27	0742401-10	SUB ASSEMBLY-WHEEL	1	
-28	0742401-4	FLANGE	1	
-29	0742401-5	RING-FLANGE RETAINING	1	
-30	0442006-11	BEARING SET INCLUDES CONE & CUP	2	
-31	0742401-6	PLATE-GREASE RETAINER INNER	1	
-32	0742401-7	RING-GREASE RETAINER FELT	1	
-33	0742401-8	PLATE-GREASE RETAINER OUTER	1	
-34	0742401-9	RING-GREASE RETAINER RETAINING	1	
-35	0742401-11	SPRING-VALVE STEM RETAINING	1	
-36	0742401-13	RETAINER-GREASE	2	
-37	0742401-12	PLATE-FAIRING		
		ATTACHING PARTS		
-38	AN520-10-6	SCREW	2	
		---*---		
-39	0742401-3	TIRE-8 INCHES S.C.	1	
-40	0742401-14	TUBE-8 INCHES X 3-1/4 INCHES S.C.	1	

NOTE. # FOR COMPLETE BEARING SET CONSISTING OF 08118 CONE & 08231 CUP ORDER 0742400-12.

NOTE. * FOR COMPLETE BEARING SET CONSISTING OF A4050 CONE & A4138 CUP ORDER 0442006-11.

A---SERIAL 18051184 THRU 18051262

Alighting Gear (Cont)

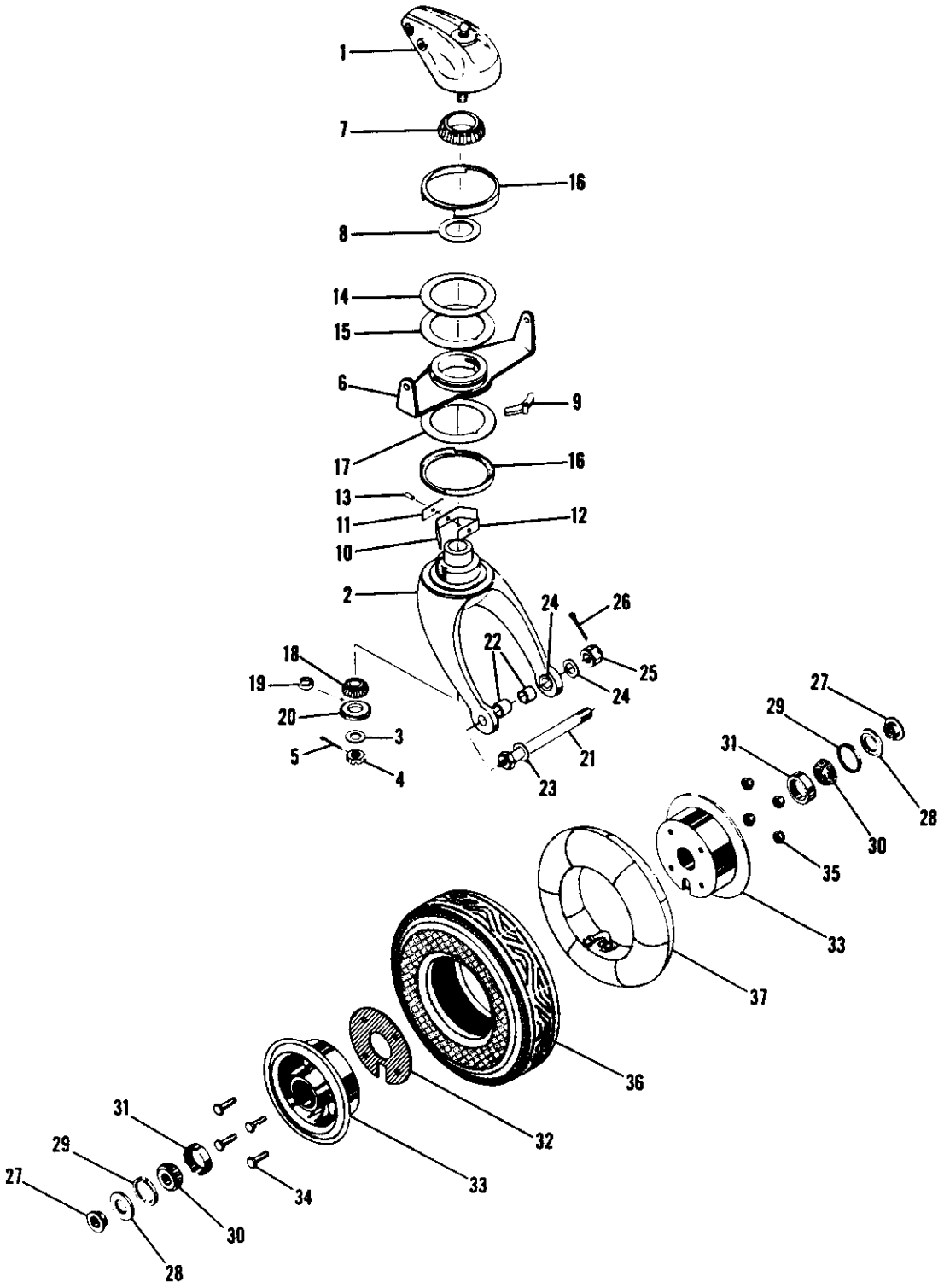

SERIAL 18051263 THRU 18051312

Figure 48A. Tail Wheel Assembly

FIGURE AND INDEX NO.	PART NUMBER	DESCRIPTION 1 2 3 4 5 6 7	UNITS PER ASSY	USABLE ON CODE
48A-	0742400-13	TAILWHEEL ASSEMBLY-8 IN. PNEUMATIC	1	A
	0742400-10	FORK AND BRACKET ASSEMBLY-TAILWHEEL	1	
- 1	3412	BRACKET ASSEMBLY SCA	1	
	19118	FITTING-LUBRICATION AL	1	
	08231 #	CUP TI	1	
- 2	3413	FORK ASSEMBLY SCA	1	
		ATTACHING		
- 3	AN960-816	WASHER	1	
- 4	AN320-8	NUT	1	
- 5	MS24665-283	PIN-COTTER	1	
		---*---		
	A4138 *	CUP-BEARING TI	1	
	3226	PIN SCA	1	
- 6	3410-3	ARM ASSEMBLY SCA	1	
- 7	08118 #	CONE-BEARING TA	1	
- 8	3407	SPACER	AR	
- 9	3219	PAWL SCA	1	
-10	3222	SPRING SCA	1	
-11	3258	SPACER-SPRING SCA	1	
-12	3258-1	SPACER-SPRING SCA	1	
-13	3257	PIN-STAKING SCA	1	
-14	3408	WASHER-STEEL SCA	1	
-15	3408-1	WASHER-FORMICA SCA	1	
-16	3411	DUST CAP SCA	1	
-17	3408-2	WASHER SCA	1	
-18	A4050 *	CONE-BEARING TI	1	
-19	2504-1	SPACER SCA	1	
-20	1863	RETAINER-GREASE	1	
	2600	WHEEL AND TIRE ASSEMBLY SCA	1	
		ATTACHING PARTS		
-21	3236C2	AXLE ASSEMBLY SCA	2	
-22	0742400-11	BUSHING	1	
-23	3225	WASHER-LOCK SCA	3	
-24	AN960-816	WASHER	1	
-25	AN310-8	NUT	1	
-26	MS24665-283	PIN-COTTER		
		---*---		
	3244	WHEEL ASSEMBLY SCA	1	
-27	3227	SPACER SCA	2	
-28	1863	RETAINER-GREASE SCA	2	
-29	1862	SPACER-GREASE RETAINING SCA	2	
-30	A4050	CONE-BEARING TI	2	
-31	A4138	CUP-BEARING TI	2	
-32	2602	GASKET SCA	1	
-33	2598	HUB-WHEEL SCA	2	
		ATTACHING PARTS		
-34	AN4-7A	BOLT	4	
-35	NAS679A4	NUT	4	
		---*---		
-36	3228	TIRE-8X2.80 4 PLY SCA	1	
-37	3223	TUBE 8X2.80 SCA	1	

NOTE.# FOR COMPLETE BEARING SET CONSISTING OF 08118 CONE AND 08231 CUP, ORDER 0742400-12.

NOTE.* FOR COMPLETE BEARING SET CONSTISTING OF A4050 CONE AND A4138 CUP ORDER 0442006-11.

A---SERIAL 18051263 THRU 18051312

Alighting Gear (Cont)

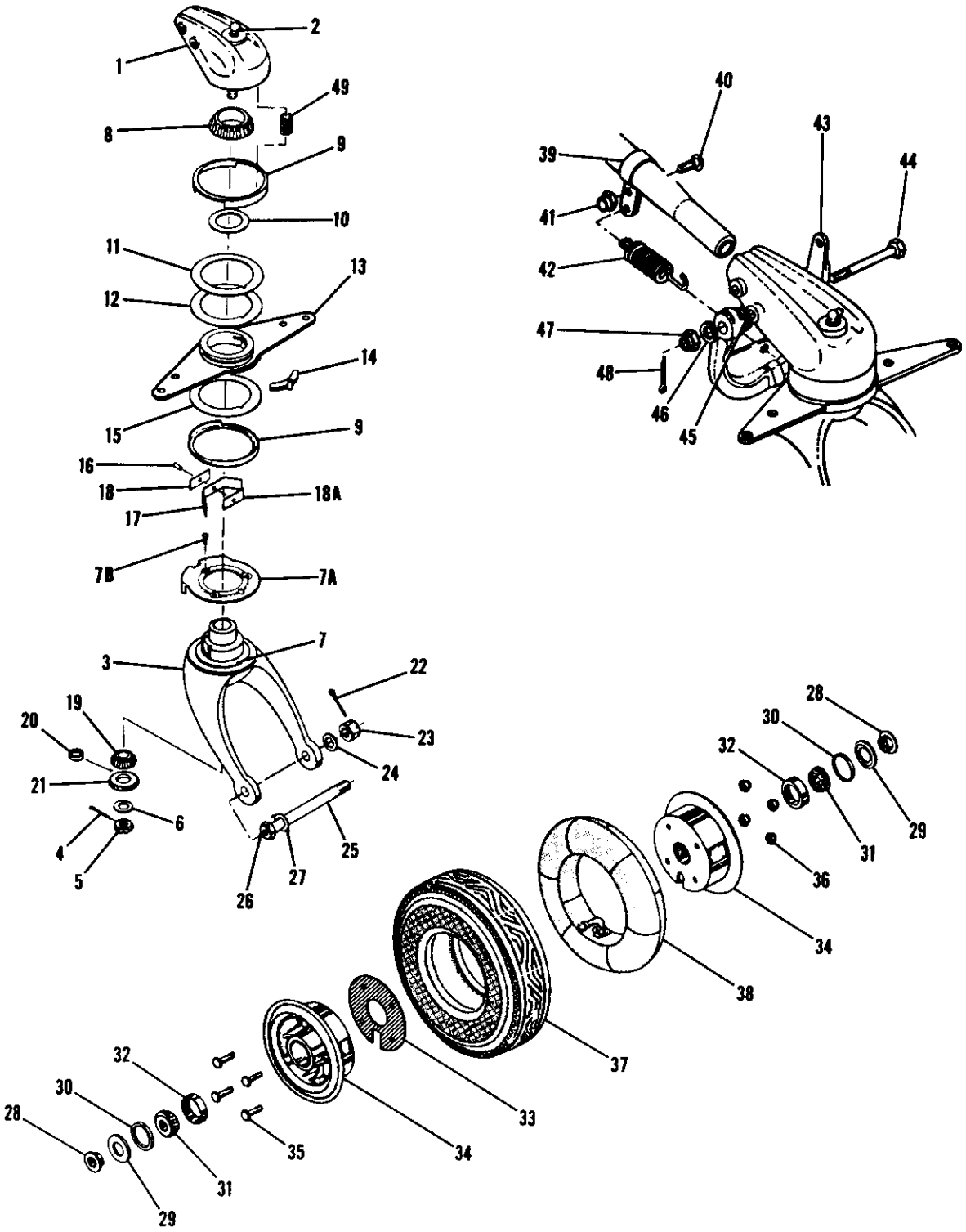

SERIAL 185-0654 THRU 18502310
SERIAL 18051313 THRU 18052384

Figure 48B. Tailwheel Assembly

FIGURE AND INDEX NO.	PART NUMBER	DESCRIPTION 1 2 3 4 5 6 7	UNITS PER ASSY	USABLE ON CODE
48B-	0742101-3	TAILWHEEL ASSEMBLY- 8 IN. PNEUMATIC	1	C
	0742147-6	TAILWHEEL ASSEMBLY- 8 IN. PNEUMATIC	1	D
	0742101-4	TAILWHEEL ASSEMBLY-8 IN. PNEUMATIC	1	E
	0742147-5	TAILWHEEL ASSEMBLY-8 IN. PNEUMATIC	1	F
- 1	3412-1	BRACKET ASSEMBLY SCA	1	G
	3412-2	BRACKET ASSEMBLY SCA	1	H
- 2	19118	FITTING-LUBRICATION AL	1	
	08231 *	CUP-BEARING TI FSO 0742400-12	NP	
- 3	3413-1	FORK ASSEMBLY SCA	1	
		ATTACHING PARTS		
- 4	MS24665-283	PIN-COTTER	1	
- 5	AN320-8	NUT	1	
- 6	AN960-816	WASHER	1	
		---*---		
	A4138 *	CUP-BEARING TI FSO 0442006-11	NP	
- 7	52-048-250-0375	PIN-ROLL EN	1	
- 7A	3427	COLLAR-LOCKING SCA	1	
- 7B	AN510-10R7	SCREW	3	
- 8	08118 *	CONE-BEARING TI FSO 0742400-12	NP	
- 9	3411-3	DUST CAP SET SCA	1	
-10	3407	SPACER SCA	AR	
-11	3408	WASHER-STEEL SCA	1	
-12	3408-1	WASHER-PHENOLITE SCA	AR	
	3408-2	WASHER-PHENOLITE SCA	AR	
-13	3410-5	ARM ASSEMBLY SCA	1	
-14	3219	PAWL SCA	1	
-15	3479-1	WASHER SCA	AR	
-16	3257	PIN-STAKING SCA	1	
-17	3432	SPRING SCA	1	
-18	3433	SPACER-SPRING SCA	AR	
-18A	3258	SPACER SCA	AR	
	3258-1	SPACER SCA	AR	
-19	A4050 *	CONE-BEARING TI FSO 0442006-11	NP	
-20	2504-1	SPACER SCA	1	
-21	1863	RETAINER-GREASE SCA	1	
	2600	WHEEL AND TIRE ASSEMBLY 8 INCH SCA	1	
		ATTACHING PARTS		
-22	MS24665-283	PIN-COTTER	1	
-23	AN310-8	NUT	1	
-24	AN960-816L	WASHER	1	
-25	3236C2	AXLE ASSEMBLY SCA	1	
-26	MS15001-1	FITTING-LUBRICATION	1	
-27	3225	WASHER-LOCK SCA	1	
		---*---		
	3244	WHEEL ASSEMBLY SCA	1	
-28	3227	SPACER SCA	2	
-29	1863	RETAINER-GREASE SCA	2	
-30	1862	SPACER-GREASE RETAINING SCA	2	
-31	A4050 *	CONE-BEARING TI FSO 0442006-11	NP	
-32	A4138 *	CUP-BEARING TI FSO 0442006-11	NP	
-33	2602	GASKET SCA	1	
-34	2598	HUB-WHEEL SCA	2	
		ATTACHING PARTS		
-35	AN4-7A	BOLT	4	
-36	NAS679A4	NUT	1	
		---*---		
-37	3228	TIRE- 8X2.80 4 PLY SCA	1	
-38	3223	TUBE- 8X2.80 SCA	1	
-39	3478	CLAMP SCA	1	C
	3478-1	CLAMP SCA	1	D
		ATTACHING PARTS		
-40	AN515-6R5	SCREW	1	A
-41	NAS679A06	NUT	1	A
		---*---		

CONTINUED ON NEXT PAGE

FIGURE AND INDEX NO.	PART NUMBER	DESCRIPTION 1 2 3 4 5 6 7	UNITS PER ASSY	USABLE ON CODE
48B-42	3477	SPRING SCA	1	A
-43	3426	BELLCRANK SCA	1	A
-44	AN5-36	BOLT	1	A
	AN5-27	BOLT NOT USED ON 180 SKI PLANE	1	B
-45	3476	BUSHING SCA	2	A
-46	AN960-516L	WASHER	2	
-47	MS35692-522	NUT	1	
-48	MS24665-134	PIN-COTTER	1	
-49	3233	SPRING	2	J

NOTE. #FOR COMPLETE BEARING SET CONSISTING OF 08118 CONE AND 08231 CUP, ORDER 0742400-12.

NOTE. #FOR COMPLETE BEARING SET CONSISTING OF A4050 CONE AND A4138 CUP, ORDER 0442006-11.

A---SERIAL 185-0654 THRU 18502310
SERIAL 18052285 THRU 18052384 SKI PLANE
B---SERIAL 18051313 & ON
C---SERIAL 185-0654 THRU 185-1206
D---SERIAL 185-1207 THRU 18502310
SERIAL 18052285 THRU 18052384 SKI PLANE
E---SERIAL 18051313 THRU 18051847
F---SERIAL 18051848 THRU 18052384
G---SERIAL 185-0654 THRU 185-1206
SERIAL 18051313 THRU 18051847
H---SERIAL 185-1207 THRU 18502310
SERIAL 18051848 THRU 18052384
J---SERIAL 18052138 THRU 18052384
SERIAL 18501677 THRU 18502310

Door & Window

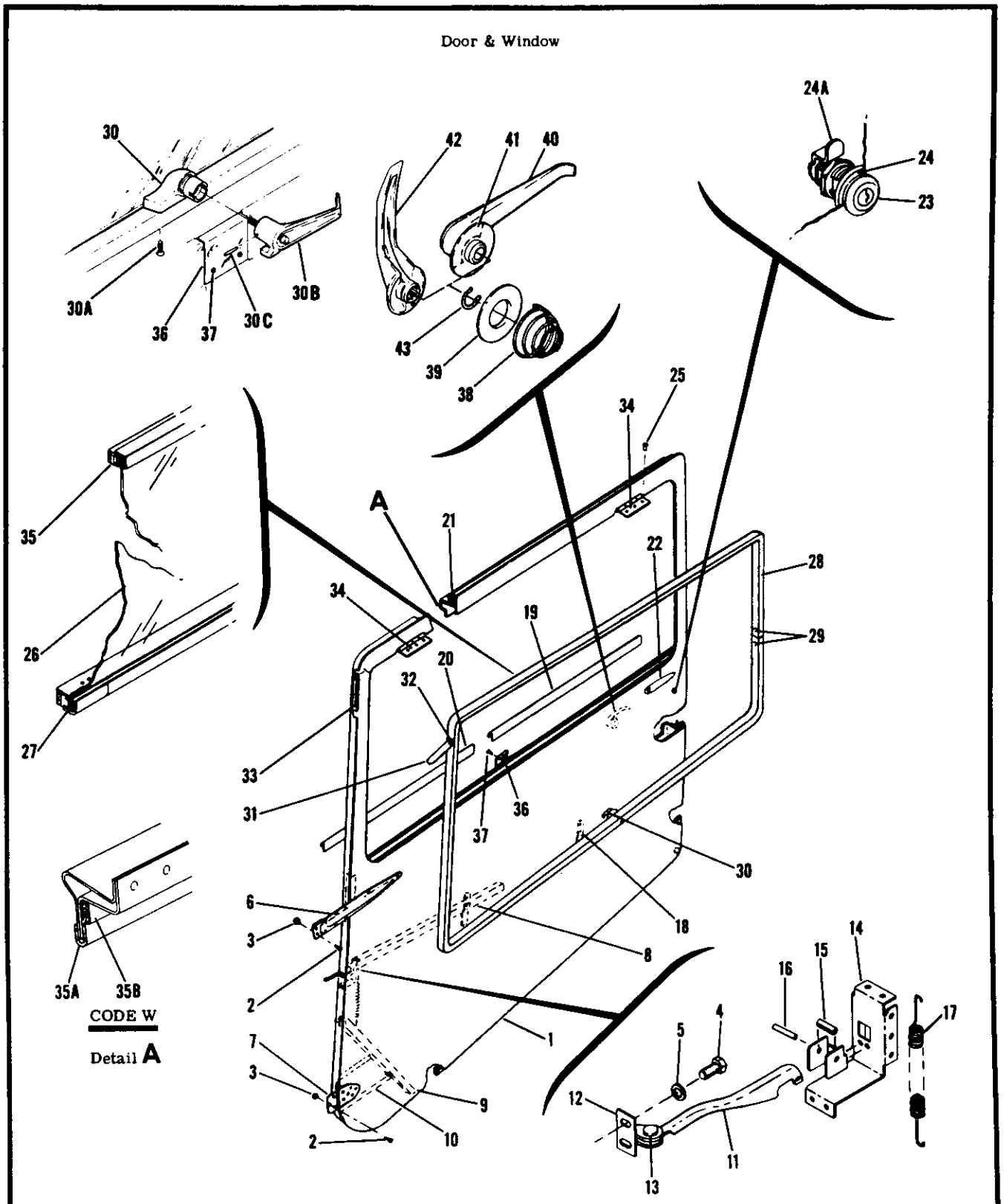

Figure 49. Left Cabin Door Installation

FIGURE AND INDEX NO.	PART NUMBER	DESCRIPTION 1 2 3 4 5 6 7	UNITS PER ASSY	USABLE ON CODE
49 -		CABIN DOOR INSTALLATION-LH	NP	
- 1	0711023-61	STRUCTURE ASSEMBLY-CABIN DOOR LH	1	A
	0711023-75	STRUCTURE ASSEMBLY-CABIN DOOR LH	1	B
	0711023-85	STRUCTURE ASSEMBLY-CABIN DOOR LH CLEAR WINDOW	1	J
	0711023-201	STRUCTURE ASSEMBLY-CABIN DOOR LH TINTED WINDOW	1	K
	0711023-95	STRUCTURE ASSEMBLY-CABIN DOOR LH CLEAR WINDOW	1	P
	0711023-203	STRUCTURE ASSEMBLY-CABIN DOOR LH TINTED WINDOW	1	P
	0711023-101	STRUCTURE ASSEMBLY-CABIN DOOR LH CLEAR WINDOW	1	R
	0711023-205	STRUCTURE ASSEMBLY-CABIN DOOR LH TINTED WINDOW	1	R
	0711023-105	STRUCTURE ASSEMBLY-CABIN DOOR LH CLEAR WINDOW	1	S
		ATTACHING PARTS		
- 2	AN507-1032R12	SCREW	4	
- 3	MS21044N3	NUT	4	
- 4	AN3-3A	BOLT	2	
- 5	AN960-10L	WASHER	2	
		---*---		
- 6	0711037-1	HINGE-UPPER LH REAR	1	
	0711037-5	HINGE-UPPER LH FORWARD	1	
		ATTACHING PARTS		
	0711038-1	PIN-HINGE	1	
		---*---		
- 7	0711037-3	HINGE-LOWER LH REAR	1	
	0711037-10	HINGE-LOWER LH FORWARD	1	
		ATTACHING PARTS		
	0711038-1	PIN-HINGE	1	
		---*---		
- 8	0711001-25	STIFFENER-DOOR UPPER	1	
- 9	0711001-45	STIFFENER-DOOR LOWER	1	
-10	0711001-43	BRACKET-LOWER HINGE REINFORCEMENT	1	
-11	0711040-1	STOP ASSEMBLY-DOOR	1	
-12	0711039-1	HINGE ASSEMBLY LH	1	
-13	MS20450C12-12	RIVET	1	
-14	0711001-35	BRACKET ASSEMBLY-DOOR STOP	1	
-15	0711001-52	SPACER	1	
-16	NAS561-3-18	ROLL PIN	1	
-17	0711001-29	SPRING-DOOR STOP	2	
-18	0511463-1	CLIP-DOOR PANEL		
		ATTACHING PARTS		
	S1021Z4-4	SCREW	4	
		---*---		
-19	0711023-14	CHANNEL-UPHOLSTERY RETAINER	1	
-20	0711023-15	CHANNEL-UPHOLSTERY RETAINER	1	
-21	S1116-1	SEAL-144.0 IN LG BULK ITEM REF S1116-1-144.0	1	
-22	0711061-1	LATCH ASSEMBLY-DOOR LH SEE FIGURE 51	1	F
	1511205-7	LATCH ASSEMBLY-DOOR LH SEE FIGURE 51A	1	J
	1511205-13	LATCH ASSEMBLY-DOOR LH SEE FIGURE 51A	1	P
	1511205-16	LATCH ASSEMBLY-DOOR LH SEE FIGURE 51A	1	Q
		ATTACHING PARTS		
	NAS220-5	SCREW	12	F
	NAS220-5	SCREW	2	C
	AN525-832R7	SCREW	8	C
		---*---		
-23	0413323-5	LOCK ASSEMBLY-DOOR WHEN EXHAUSTED USE C253001-0101 LOCK & 0711033-1 CAM	1	
	C253001-0101	LOCK ASSEMBLY-DOOR	1	
		ATTACHING PARTS		
-24	0411851	WASHER	1	
		---*---		
-24A	0711033-1	CAM	1	
	0711050-19	WINDOW ASSEMBLY-DOOR LH CLEAR	1	
	0711050-203	WINDOW ASSEMBLY-DOOR LH TINTED	1	G
		ATTACHING PARTS		
-25	CR163-4-4	RIVET CY	8	
		---*---		
-26	0711051-1	GLASS ASSEMBLY-WINDOW CLEAR	1	
	0711051-2	GLASS ASSEMBLY-WINDOW TINTED	1	G
-27	S1082-1	SEAL-83.75 IN LG BULK ITEM REF S-1082-1-83.75	1	
-28	0711050-5	FRAME-WINDOW	1	
		ATTACHING PARTS		
-29	CR763-4-4	RIVET CY	6	
		---*---		

CONTINUED ON NEXT PAGE

FIGURE AND INDEX NO.	PART NUMBER	DESCRIPTION 1 2 3 4 5 6 7	UNITS PER ASSY	USABLE ON CODE
49 -30	1411202-201	BRACKET ASSEMBLY-WINDOW LATCH	1	
		ATTACHING PARTS		
-30A	NAS514P1032-14	SCREW	2	
	NAS43HT3-34	SPACER	2	
		---*---		
-30B	S1483-2	HANDLE ASSEMBLY-WINDOW LH	1	
		ATTACHING PARTS		
-30C	NAS561P3-8	PIN-ROLL	1	
		---*---		
-31	0711021-4	ARM ASSEMBLY-WINDOW	1	
		ATTACHING PARTS		
-32	AN525-10R8	SCREW	1	
		---*---		
-33	0711021-9	SPRING-WINDOW ARM	1	
-34	0411185-7	HINGE ASSEMBLY-WINDOW	2	
-35	S1378-2	SEAL-WINDOW 84.00 IN.LG. BULK ITEM	1	V
-35A	S2195-2	TRIM-84.00 IN LG BKI	1	W
-35B	S2108-1	SEAL-84.00 IN LG BKI	1	W
-36	0711093-1	PLATE-WINDOW LATCH	1	D
	0711021-7	PLATE-WINDOW LATCH	1	E
		ATTACHING PARTS		
-37	AN515-6R5	SCREW	2	
		---*---		
-38	0413317-1	SPRING-DOOR HANDLE	1	
-39	0511189-2	ESCUTCHEON-DOOR HANDLE WHEN EXHAUSTED USE 1211836-1	1	M
	1211836-1	WASHER	1	Q
-40	0711027-1	HANDLE-DOOR INSIDE	1	H
	1211250-1	HANDLE ASSEMBLY-DOOR INSIDE LH	1	P
	1211250-7	HANDLE ASSEMBLY-DOOR INSIDE	1	T
	1211251-1	INSERT-DOOR HANDLE	1	L
-41	0700166-1	PLACARD-DOOR HANDLE LH	1	N
-42	0517006-2	HANDLE-DOOR INSIDE	1	U
-43	0511189-1	CLIP-DOOR HANDLE RETAINING	1	

A---SERIAL 185-0001 THRU 185-0512
B---SERIAL 185-0513 THRU 185-0967
SERIAL 18051184 THRU 18051607
C---SERIAL 185-0968 THRU 18502310
SERIAL 18051608 THRU 18052384
D---SERIAL 185-0517 THRU 185-0786
SERIAL 18051184 THRU 18051464
E---SERIAL 185-0001 THRU 185-0516
185-0787 THRU 18502310
SERIAL 18051465 THRU 18052384
F---SERIAL 185-0001 THRU 185-0967
SERIAL 18051184 THRU 18051607
G---SERIAL 185-1150 THRU 18502310
SERIAL 18051775 THRU 18052384
H---SERIAL 185-0001 THRU 185-1300
SERIAL 18051184 THRU 18051875
J---SERIAL 185-0968 THRU 185-1300
SERIAL 18051608 THRU 18051875
K---SERIAL 185-1150 THRU 185-1300
SERIAL 18051775 THRU 18051875
L---SERIAL 185-1301 THRU 18502090
SERIAL 18051876 THRU 18052284
M---SERIAL 185-0001 THRU 185-1599
SERIAL 18051184 THRU 18052103
N---SERIAL 185-0968 THRU 185-1599
SERIAL 18051608 THRU 18052103
P---SERIAL 185-1301 THRU 185-1599
SERIAL 18051876 THRU 18052103
Q---SERIAL 18501600 THRU 18502310
SERIAL 18052104 THRU 18052384
R---SERIAL 18501600 THRU 18501876
SERIAL 18052104 THRU 18052194
S---SERIAL 18501877 THRU 18502310
SERIAL 18052195 THRU 18052384
T---SERIAL 18501600 THRU 18502090
SERIAL 18052104 THRU 18052284
U---SERIAL 18502091 THRU 18502310
SERIAL 18052285 THRU 18052384
V---SERIAL 185-0001 THRU 18502217
SERIAL 18051184 THRU 18052340
W---SERIAL 18502218 THRU 18502310
SERIAL 18052341 THRU 18052384

FIGURE AND INDEX NO.	PART NUMBER	DESCRIPTION 1 2 3 4 5 6 7	UNITS PER ASSY	USABLE ON CODE
50 -		CABIN DOOR INSTALLATION-RH	NP	
- 1	0711023-72	STRUCTURE ASSEMBLY-CABIN DOOR RH	1	A
	0711023-76	STRUCTURE ASSEMBLY-CABIN DOOR RH WEU 0711023-77	1	C
	0711023-77	STRUCTURE ASSEMBLY-CABIN DOOR RH	1	D
	0711023-86	STRUCTURE ASSEMBLY-CABIN DOOR RH CLEAR WINDOW	1	L
	0711023-200	STRUCTURE ASSEMBLY-CABIN DOOR RH TINTED WINDOW	1	M
	0711023-94	STRUCTURE ASSEMBLY-CABIN DOOR RH CLEAR WINDOW	1	R
	0711023-202	STRUCTURE ASSEMBLY-CABIN DOOR RH TINTED WINDOW	1	R
	0711023-100	STRUCTURE ASSEMBLY-CABIN DOOR RH CLEAR WINDOW	1	T
	0711023-204	STRUCTURE ASSEMBLY-CABIN DOOR RH TINTED WINDOW	1	T
	0711023-104	STRUCTURE ASSEMBLY-CABIN DOOR RH CLEAR WINDOW	1	U
		ATTACHING PARTS		
- 2	AN507-1032R12	SCREW	4	
- 3	MS21044N3	NUT	4	
- 4	AN3-3A	BOLT	2	
- 5	AN960-10L	WASHER	2	
		---*---		
- 6	0711037-2	HINGE-UPPER RH REAR	1	
	0711037-6	HINGE-UPPER RH FORWARD	1	
		ATTACHING PARTS		
- 7	S1426-1	PIN-REMOVABLE HINGE	1	B
	0711038-1	PIN-HINGE	1	C
		---*---		
- 8	0711037-4	HINGE-LOWER RH REAR	1	
	0711037-11	HINGE-LOWER RH FORWARD	1	
		ATTACHING PARTS		
- 9	S1426-1	PIN-REMOVABLE HINGE	1	B
	0711038-1	PIN-HINGE	1	C
		---*---		
-10	0711001-26	STIFFENER-DOOR UPPER	1	
-11	0711040-14	STOP ASSEMBLY-DOOR	1	B
	0711040-2	STOP ASSEMBLY-DOOR	1	C
-12	MS20392-2C9	PIN	1	B
-13	MS24665-132	PIN-COTTER	1	B
-14	0711001-36	BRACKET ASSEMBLY-DOOR STOP	1	
-15	0711001-52	SPACER	1	
-16	NAS561-3-18	ROLL PIN EN	1	
-17	0711001-29	SPRING-DOOR STOP	1	
-18	0511463-1	CLIP-DOOR PANEL	2	
		ATTACHING PARTS		
	S1021Z4-4	SCREW	4	
		---*---		
-19	0711023-14	CHANNEL-UPHOLSTERY RETAINER	1	
-20	0711023-15	CHANNEL-UPHOLSTERY RETAINER	1	
-21	S1116-1	SEAL-144.00 IN LG BULK ITEM REF S1116-1-144.0	1	
-22	0711061-2	LATCH ASSEMBLY-DOOR RH SEE FIGURE 51	1	H
	1511205-6	LATCH ASSEMBLY-DOOR RH SEE FIGURE 51A	1	L
	1511205-14	LATCH ASSEMBLY-DOOR RH SEE FIGURE 51A	1	R
	1511205-17	LATCH ASSEMBLY-DOOR RH SEE FIGURE 51A	1	S
		ATTACHING PARTS		
	NAS220-5	SCREW	12	H
	NAS220-5	SCREW	2	E
	AN525-832R7	SCREW	8	E
		---*---		
	0711050-20	WINDOW ASSEMBLY-DOOR RH CLEAR	1	
	0711050-202	WINDOW ASSEMBLY-DOOR RH TINTED	1	J
		ATTACHING PARTS		
-23	CR163-4-4	RIVET CY	6	
		---*---		
-24	0711051-1	GLASS ASSEMBLY-WINDOW CLEAR	1	
	0711051-2	GLASS ASSEMBLY-WINDOW TINTED	1	J
-25	S1082-1	SEAL-83.75 IN LG BULK ITEM REF S-1082-1-83.75 -	1	
-26	0711050-6	FRAME-WINDOW	1	
		ATTACHING PARTS		
-27	CR763-4-4	RIVET CY	6	
		---*---		
-28	1411202-201	BRACKET ASSEMBLY-WINDOW LATCH	1	
		ATTACHING PARTS		
-28A	NAS514P1032-14	SCREW	2	
	NAS43HT3-34	SPACER	2	
		---*---		

CONTINUED ON NEXT PAGE

Door & Window (Cont)

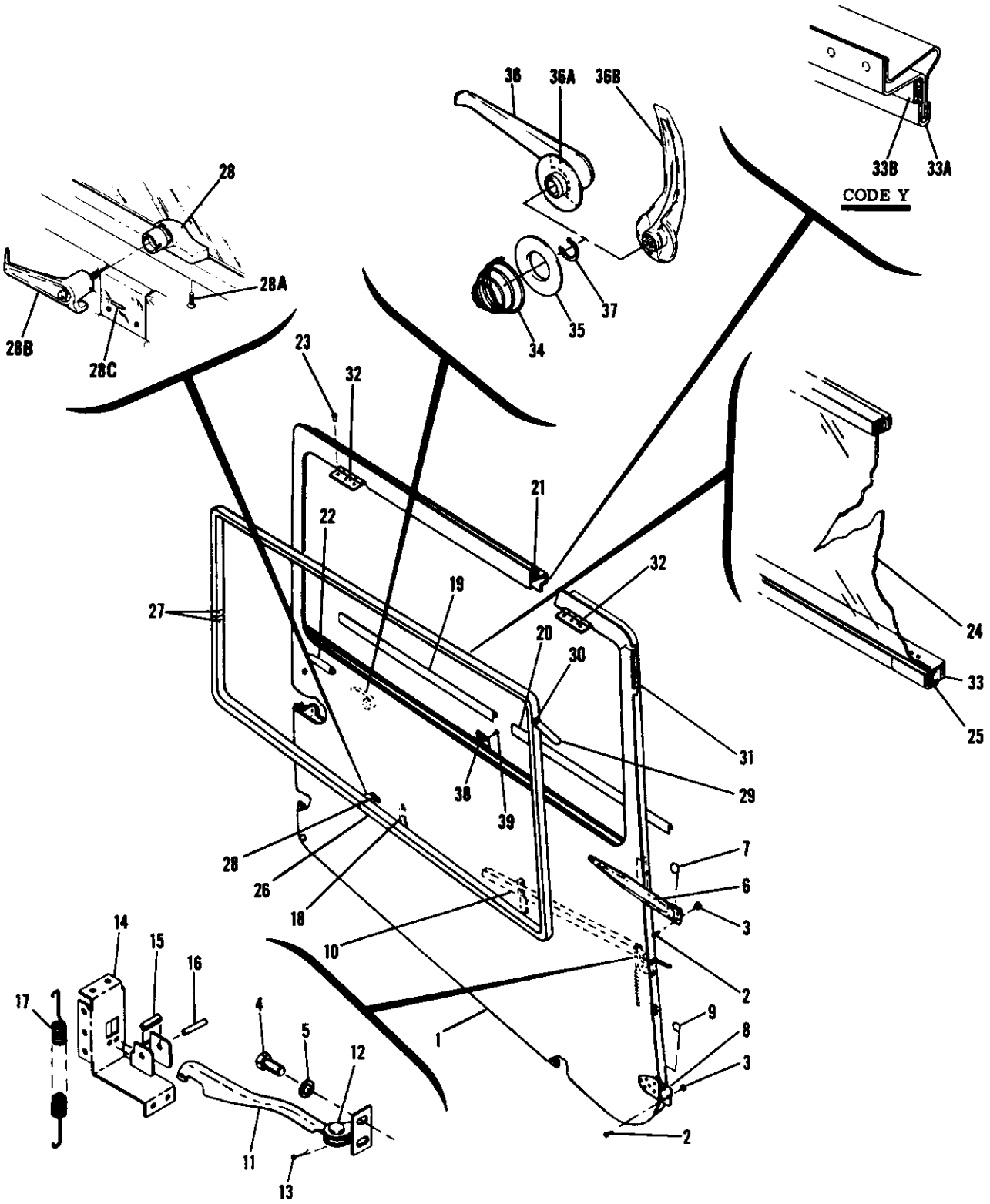

Figure 50. Right Cabin Door Installation

FIGURE AND INDEX NO.	PART NUMBER	DESCRIPTION 1 2 3 4 5 6 7	UNITS PER ASSY	USABLE ON CODE
50 -28B	S1483-1	HANDLE ASSEMBLY-WINDOW RH	1	
		ATTACHING PARTS		
-28C	NAS561P3-8	PIN-ROLL	1	
		---*---		
-29	0711021-4	ARM ASSEMBLY-WINDOW	1	
		ATTACHING PARTS		
-30	AN525-10R8	SCREW	1	
		---*---		
-31	0711021-9	SPRING-WINDOW ARM	2	
-32	0411185-7	HINGE ASSEMBLY-WINDOW	1	X
-33	S1378-2	SEAL-84.00 IN LG BULK ITEM REF S1378-2-84.00	1	Y
-33A	S2195-2	TRIM-84.00 IN LG BKI	1	Y
-33B	S2108-2	SEAL-84.00 IN LG BKI	1	
-34	0413317-1	SPRING-DOOR HANDLE	1	P
-35	0511189-2	ESCUTCHEON-DOOR HANDLE WHEN EXHAUSTED USE 1211836-1	1	S
	1211836-1	WASHER	1	K
-36	0711027-1	HANDLE-DOOR INSIDE	1	R
	1211250-2	HANDLE ASSEMBLY-DOOR INSIDE RH	1	V
	1211250-7	HANDLE ASSEMBLY-DOOR INSIDE	1	N
	1211251-1	INSERT-DOOR HANDLE	1	Q
-36A	0700166-2	PLACARD-DOOR HANDLE RH	1	W
-36B	0517006-2	HANDLE-DOOR INSIDE	1	
-37	0511189-1	CLIP-DOOR HANDLE RETAINING	1	F
-38	0711093-1	PLATE-WINDOW LATCH	1	G
	0711021-7	PLATE-WINDOW LATCH		
		ATTACHING PARTS	2	
-39	AN515-6R5	SCREW		
		---*---		
		A---SERIAL 185-0001 THRU 185-0512		
		B---SERIAL 185-0001 THRU 18502310		
		SERIAL 18051313 THRU 18052384		
		C---SERIAL 18051184 THRU 18051312		
		D---SERIAL 185-0513 THRU 185-0967		
		SERIAL 18051313 THRU 18051608		
		E---SERIAL 185-0968 THRU 18502310		
		SERIAL 18051608 THRU 18052384		
		F---SERIAL 185-0517 THRU 185-0786		
		SERIAL 18051184 THRU 18051464		
		G---SERIAL 185-0001 THRU 185-0516		
		185-0787 THRU 18502310		
		SERIAL 18051465 THRU 18052384		
		H---SERIAL 185-0001 THRU 185-0967		
		SERIAL 18051184 THRU 18051607		
		J---SERIAL 185-1150 THRU 18502310		
		SERIAL 18051775 THRU 18052384		
		K---SERIAL 185-0001 THRU 185-1300		
		SERIAL 18051184 THRU 18051875		
		L---SERIAL 185-0968 THRU 185-1300		
		SERIAL 18051608 THRU 18051875		
		M---SERIAL 185-1150 THRU 185-1300		
		SERIAL 18051775 THRU 18051875		
		N---SERIAL 185-1301 THRU 18502090		
		SERIAL 18051876 THRU 18052284		
		P---SERIAL 185-0001 THRU 185-1599		
		SERIAL 18051184 THRU 18052103		
		Q---SERIAL 185-0968 THRU 185-1599		
		SERIAL 18051608 THRU 18052103		
		R---SERIAL 185-1301 THRU 185-1599		
		SERIAL 18051876 THRU 18052103		
		S---SERIAL 18501600 THRU 18502310		
		SERIAL 18052104 THRU 18052384		
		T---SERIAL 18501600 THRU 18501876		
		SERIAL 18052104 THRU 18052194		
		U---SERIAL 18501877 THRU 18502310		
		SERIAL 18052195 THRU 18052384		
		V---SERIAL 18501600 THRU 18502090		
		SERIAL 18052104 THRU 18052284		
		W---SERIAL 18502091 THRU 18502310		
		SERIAL 18052285 THRU 18052384		
		X---SERIAL 185-0001 THRU 18502217		
		SERIAL 18051184 THRU 18052340		
		Y---SERIAL 18502218 THRU 18502310		
		SERIAL 18052341 THRU 18052384		

Door & Window (Cont)

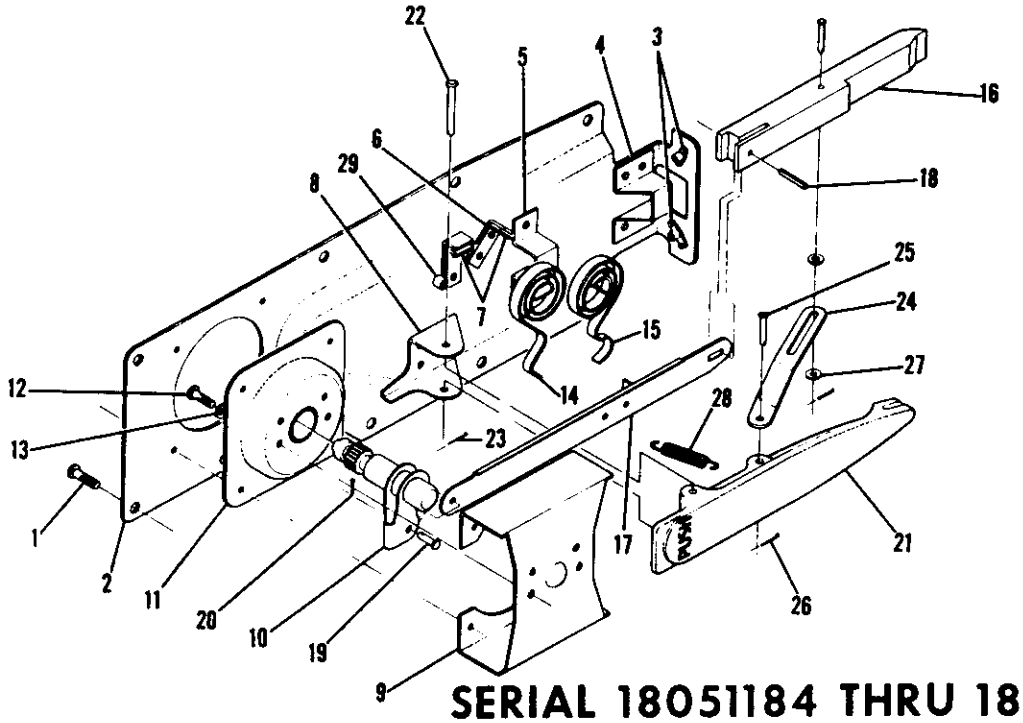

SERIAL 18051184 THRU 18051607
SERIAL 185-0001 THRU 185-0967

Figure 51. Removable Latch Assembly

FIGURE AND INDEX NO.	PART NUMBER	DESCRIPTION 1 2 3 4 5 6 7	UNITS PER ASSY	USABLE ON CODE
51 -		LATCH INSTALLATION-CABIN DOOR REMOVABLE	NP	A
	0711061-1	LATCH ASSEMBLY-CABIN DOOR LH	1	
	0711061-2	LATCH ASSEMBLY-CABIN DOOR RH	1	
		ATTACHING PARTS		
- 1	NAS220-5	SCREW	12	
		---*---		
- 2	0711062-1	BASE PLATE-LATCH LH	1	
	0711062-2	BASE PLATE-LATCH RH	1	
- 3	NAS697A08	NUTPLATE	2	
- 4	0711018-27	BRACKET	1	
- 5	0711132-1	BRACKET-LH	1	
	0711132-2	BRACHET-RH	1	
- 6	0711018-19	BRACKET-SPRING	2	
- 7	0711018-20	BRACKET-SPRING	2	
- 8	0711018-25	BRACKET-HANDLE	1	
- 9	0711063-1	BRACKET ASSEMBLY-DOOR LATCH LH	1	
	0711063-2	BRACKET ASSEMBLY-DOOR LATCH RH	1	
-10	0711029-1	SHAFT ASSEMBLY-DOOR LATCH LH	1	
	0711029-2	SHAFT ASSEMBLY-DOOR LATCH RH	1	
-11	0413195-5	PLATE ASSEMBLY-BEARING	1	
		ATTACHING PARTS		
-12	AN520-10R9	SCREW	2	
-13	AN936810	WASHER	2	
		---*---		
		CONTINUED ON NEXT PAGE		

FIGURE AND INDEX NO.	PART NUMBER	DESCRIPTION 1 2 3 4 5 6 7	UNITS PER ASSY	USABLE ON CODE
51 -14	0711060-1	SPRING-DOOR LATCH	1	
-15	0711019-1	SPRING-DOOR LATCH	1	
-16	0711017-1	BOLT-DOOR LATCH	1	
-17	0711018-36	STRAP ASSEMBLY-LATCH LH	1	
	0711018-37	STRAP ASSEMBLY-LATCH RH	1	
		ATTACHING PARTS		
-18	NAS561-4-9	ROLLPIN	1	
-19	MS20392-1C7	PIN	1	
-20	MS24665-132	PIN-COTTER	1	
		---*---		
-21	0711032-2	HANDLE-LATCH	1	
		ATTACHING PARTS		
-22	MS20392-1C33	PIN	1	
-23	MS24665-132	PIN-COTTER	1	
		---*---		
-24	0711018-32	PULL BAR-LATCH LH	1	
	0711018-33	PULL BAR-LATCH RH	1	
		ATTACHING PARTS		
-25	MS20392-1C23	PIN	2	
-26	MS24665-132	PIN-COTTER	2	
-27	NAS70A128-313	WASHER	3	
		---*---		
-28	0711016-1	SPRING-HANDLE	1	
-29	0711018-27	STOP	1	
		A---SERIAL 185-0001 THRU 185-0967		
		SERIAL 18051184 THRU 18051607		

Door & Window (Cont)

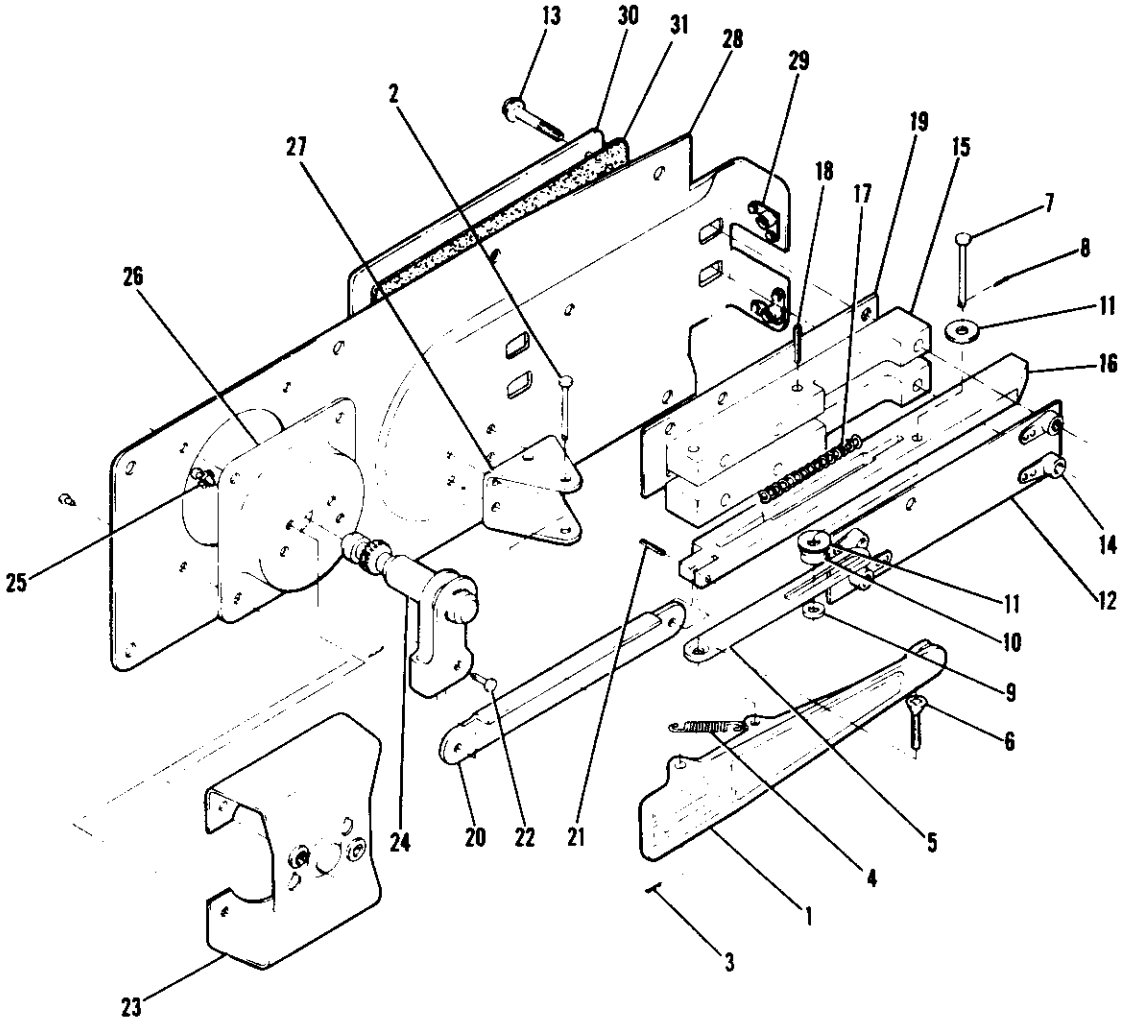

SERIAL 18051608 THRU 18052384
SERIAL 185-0968 THRU 18502310

Figure 51A. Cabin Door Latch Assembly

FIGURE AND INDEX NO.	PART NUMBER	DESCRIPTION 1 2 3 4 5 6 7	UNITS PER ASSY	USABLE ON CODE
51A-	1511205-6	LATCH ASSEMBLY-CABIN DOOR RH	1	A
	1511205-14	LATCH ASSEMBLY-CABIN DOOR RH	1	C
	1511205-17	LATCH ASSEMBLY-CABIN DOOR RH	1	D
	1511205-7	LATCH ASSEMBLY-CABIN DOOR LH	1	A
	1511205-13	LATCH ASSEMBLY-CABIN DOOR LH	1	C
	1511205-16	LATCH ASSEMBLY-CABIN DOOR LH	1	D
- 1	0711653-3	HANDLE-DOOR OUTSIDE	1	A
	1217005-2	HANDLE-DOOR OUTSIDE	1	C
	0517003-2	HANDLE-DOOR OUTSIDE	1	D
		ATTACHING PARTS		
- 2	MS20392-1C33	PIN	1	
- 3	MS24665-132	COTTER PIN	1	
		---*---		
- 4	0711016-1	SPRING-DOOR HANDLE	1	E
	0711788-1	SPRING-DOOR HANDLE	1	F
- 5	1511209-12	PULL BAR-DOOR HANDLE	1	
		ATTACHING PARTS		
- 6	AN507-632R6	SCREW	1	
- 7	MS20392-2C45	PIN	1	
- 8	MS24665-132	COTTER PIN	1	
- 9	AN960D10L	WASHER	1	
-10	NAS43D03-12	SPACER	1	
-11	1511209-8	WASHER	2	
		---*---		
-12	1511206-20	BOLT GUIDE-TOP	1	
		ATTACHING PARTS		
-13	AN525-10R18	SCREW	4	
		---*---		
-14	NAS682A3	NUTPLATE	3	
	NAS698A3	NUTPLATE	1	
-15	1511206-11	BOLT GUIDE-SIDE	2	
-16	1511206-13	BOLT ASSEMBLY-LH	1	
	1511206-14	BOLT ASSEMBLY-RH	1	
		ATTACHING PARTS		
-17	1511207-1	SPRING	1	
-18	NAS561P4-15	ROLL PIN	2	
		---*---		
-19	1511206-4	BOLT GUIDE-BASE	1	
-20	1511209-10	PUSH ROD-LH	1	
	1511209-11	PUSH ROD-RH	1	
		ATTACHING PARTS		
-21	NAS561P4-6	ROLL PIN	1	
-22	MS20392-1C7	PIN	1	
	MS24665-132	COTTER PIN	1	
		---*---		
-23	0711063-6	BRACKET ASSEMBLY	1	
-24	1511212-3	SHAFT ASSEMBLY-LH WEU 1511212-5	1	
	1511212-5	SHAFT ASSEMBLY-LH	1	
	1511212-1	SHAFT ASSEMBLY-RH WEU 1511212-6	1	
	1511212-6	SHAFT ASSEMBLY-RH	1	
-25	AN520-10R9	SCREW	2	
-26	0413195-5	PLATE ASSEMBLY	1	
-27	1511209-1	BRACKET	1	
-28	1511208-4	PLATE ASSEMBLY-LH	1	A
	1511208-13	PLATE ASSEMBLY-LH	1	B
	1511208-3	PLATE ASSEMBLY-RH	1	A
	1511208-12	PLATE ASSEMBLY-RH	1	B
-29	NAS697A08K	NUTPLATE	2	
-30	1511208-16	SHIM	1	B
-31	1511208-17	BACKING-SHIM	1	B

A---SERIAL 18051608 THRU 18051875
SERIAL 185-0968 THRU 185-1300
B---SERIAL 18051876 THRU 18052384
SERIAL 185-1301 THRU 18502310
C---SERIAL 18051876 THRU 18052103
SERIAL 185-1301 THRU 185-1599
D---SERIAL 18052104 THRU 18052384
SERIAL 18501600 THRU 18502310
E---SERIAL 18051608 THRU 18052141
SERIAL 185-0968 THRU 18501691 &
18501695 THRU 18501699
F---SERIAL 18052141 THRU 18052384
SERIAL 18501692, 18501693, 18501694 &
18501700 THRU 18502310

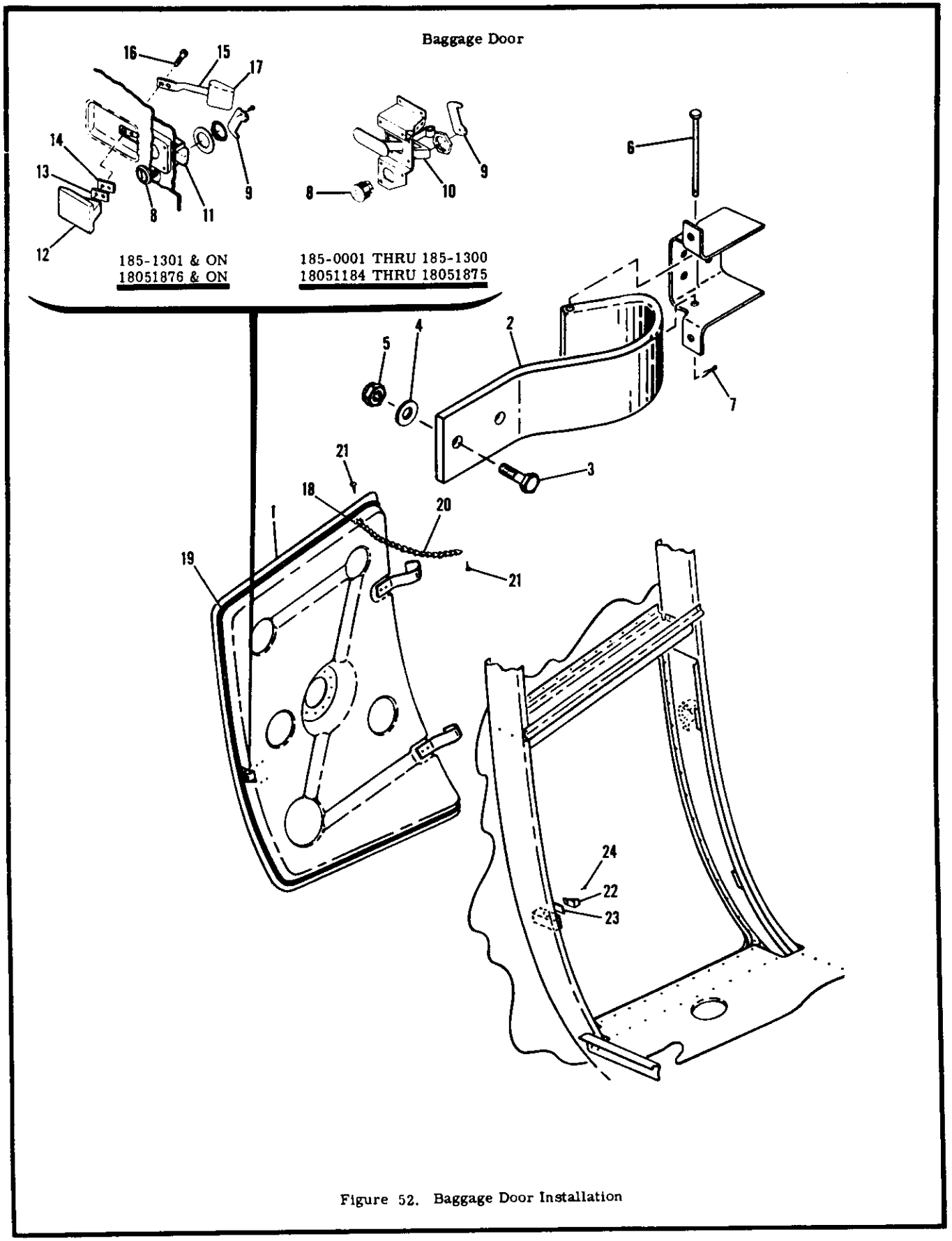

Figure 52. Baggage Door Installation

FIGURE AND INDEX NO.	PART NUMBER	DESCRIPTION 1 2 3 4 5 6 7	UNITS PER ASSY	USABLE ON CODE
52 -		BAGGAGE DOOR INSTALLATION-FUSELAGE	NP	
- 1	0711101-29	DOOR ASSEMBLY-BAGGAGE WEU 0711101-33	1	A
	0711101-33	DOOR ASSEMBLY-BAGGAGE	1	D
	0711101-40	DOOR ASSEMBLY-BAGGAGE USED WITH LITTER DOOR ONLY	1	C
	0717000-1	DOOR ASSEMBLY-BAGGAGE WHEN EXHAUSTED USE 0717000-13	1	F
	0717000-13	DOOR ASSEMBLY-BAGGAGE	1	H
	0717000-5	DOOR ASSEMBLY-BAGGAGE USED WITH LITTER DOOR ONLY WEU 071700-15	1	F
	0717000-15	DOOR ASSEMBLY-BAGGAGE USED WITH LITTER DOOR ONLY	1	H
		ATTACHING PARTS		
- 2	0711102	HINGE-BAGGAGE DOOR	2	
- 3	AN520-10R10	SCREW	4	
- 4	AN960-10	WASHER	4	
- 5	MS21044N3	NUT	4	
- 6	MS20392-1C49	PIN-CLEVIS	2	
- 7	MS24665-132	PIN-COTTER	2	
		---*---		
- 8	0413323-3	LOCK ASSEMBLY-BAGGAGE DOOR WHEN EXHAUSTED USE C253001-0101 LOCK & 0711111-1 CAM	1	A
	0413323-7	LOCK ASSEMBLY-BAGGAGE DOOR WHEN EXHAUSTED USE C253001-0101 LOCK & 0711134-1 CAM	1	B
	C253001-0101	LOCK ASSEMBLY	1	G
- 9	0711111-1	CAM-BAGGAGE DOOR LOCK	1	L
	0711134-1	CAM-BAGGAGE DOOR LOCK	1	D
-10	S1189-1	LATCH ASSEMBLY-BAGGAGE DOOR	1	A
	S1189-2	LATCH ASSEMBLY-BAGGAGE DOOR 2 WAY	1	D
-11	S1359-8	LATCH ASSEMBLY-BAGGAGE DOOR	1	E
-12	0711705-1	HANDLE-OUTSIDE	1	E
-13	0711709-1	SPACER	1	E
-14	0711709-2	SHIM	1	E
-15	1211252-1	HANDLE-INSIDE	1	J
-16	S1931-8	SCREW	2	J
	M31AS832R6C	SCREW	2	K
-17	0813526-6	KNOB	1	J
-18	NAS680A08	NUTPLATE	1	
-19	S1084-1	SEAL-80.00 IN LG BULK ITEM REF S1084-1-80.00	1	
-20	S1194-1-17	CHAIN	1	
		ATTACHING PARTS		
-21	AN515-8R6	SCREW	2	
		---*---		
-22	0311319-1	PLATE-STRIKE	1	
		ATTACHING PARTS		
-23	0311319-2	SHIM-STRIKE PLATE	1	
-24	AN515-8R8	SCREW	2	

A---SERIAL 185-0001 THRU 185-0237
B---SERIAL 185-0238 THRU 185-1149
SERIAL 18051184 THRU 18051774
C---SERIAL 185-1150 THRU 185-1300
SERIAL 18051775 THRU 18051875
D---SERIAL 185-0238 THRU 185-1300
SERIAL 18051184 THRU 18051875
E---SERIAL 185-1301 THRU 18502310
SERIAL 18051876 THRU 18052384
F---SERIAL 185-1301 THRU 18501819
SERIAL 18051876 THRU 18052170
G---SERIAL 185-1150 THRU 18502310
SERIAL 18051775 THRU 18052384
H---SERIAL 18501820 THRU 18502310
SERIAL 18052171 THRU 18052384
J---SERIAL 185-1301 THRU 18501832
SERIAL 18051876 THRU 18052175
K---SERIAL 18501833 THRU 18502310
SERIAL 18052176 THRU 18052384
L---SERIAL 185-0001 THRU 185-0237 &
185-1301 THRU 18502310
SERIAL 18051876 THRU 18052384

Upholstery

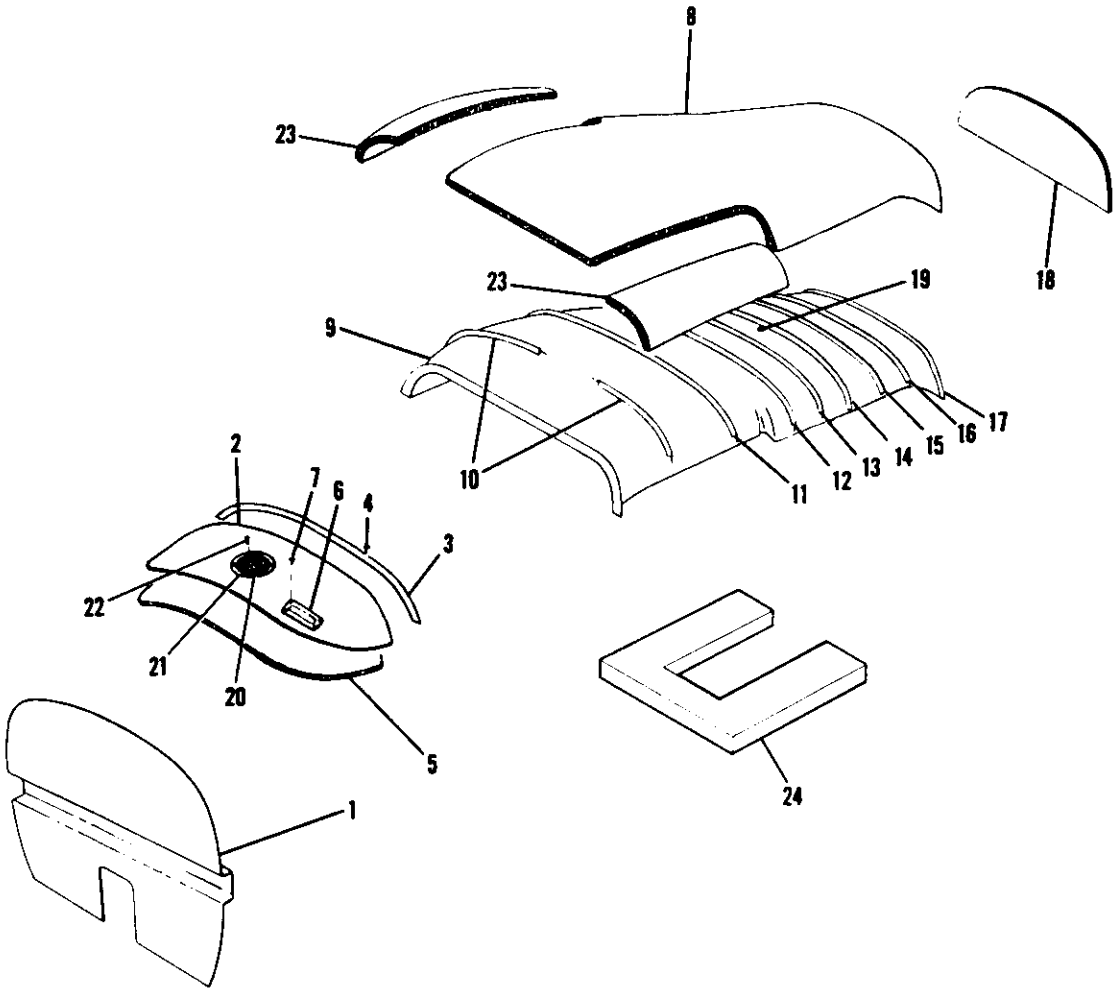

Figure 53. Cabin Top and Firewall Upholstery Installation

FIGURE AND INDEX NO.	PART NUMBER		DESCRIPTION 1 2 3 4 5 6 7	UNITS PER ASSY	USABLE ON CODE
53 -			UPHOLSTERY INSTALLATION-CABIN TOP & FIREWALL	NP	
- 1	0700105-247	#	PANEL ASSEMBLY-FIREWALL	1	
	0400123-1		DISC-UPHOLSTERY RETAINER	2	
			ATTACHING PARTS		
	S1021Z10-10		SCREW	2	
	NAS446-5-3		NUT	2	
			---*---		
- 2	0700105-226	#	COVER-COWL DECK	1	F
	0700114-62	¤	COVER-COWL DECK	1	G
- 3	0700058-1		RETAINER-COVER PANEL	1	D
			ATTACHING PARTS		
- 4	S1022A4-6B		SCREW	7	D
			---*---		
- 5	0511001-131		SOUNDPROOFING-COWL DECK	1	F
- 6	0713046		RETAINER-UPHOLSTERY	1	
			ATTACHING PARTS		
- 7	S1021Z4-6		SCREW	4	
			---*---		
- 8	0511001-186		PANEL ASSEMBLY-CABIN TOP SOUNDPROOFING	1	
- 9	0700105-317		HEADLINER ASSEMBLY-CABIN TOP	1	C
	0715037-1	#	HEADLINER ASSEMBLY-CABIN TOP	1	A
	0700105-478	#	HEADLINER ASSEMBLY-CABIN TOP	1	B
-10	0715037-10	%	WIRE-HEADLINER	1	
-11	0715037-9	%	WIRE-HEADLINER	1	
-12	0715037-8	%	WIRE-HEADLINER	1	
-13	0715037-7	%	WIRE-HEADLINER	1	
-14	0715037-6	%	WIRE-HEADLINER	1	A
	0700105-323		WIRE-HEADLINER	1	B
-15	0715037-5	%	WIRE-HEADLINER	1	A
-16	0715037-4	%	WIRE-HEADLINER	1	A
	0700105-322		WIRE-HEADLINER	1	B
-17	0715037-3	%	WIRE-HEADLINER	1	A
	0700105-321		WIRE-HEADLINER	1	B
-18	0700105-282	#	PANEL ASSEMBLY-CABIN REAR UPPER SOUNDPROOF	1	
-19	S1430-1		HOOK-COAT HANGER	1	
-20	0713155-2		SCREEN	1	D
	0500210-69		SCREEN	1	E
-21	0713155-3		RETAINER	1	D
	0513348-1		RETAINER	1	E
			ATTACHING PARTS		
-22	S1021Z6-8		SCREW	4	
	NAS395-6-3		NUT	4	
			---*---		
	B1	*	SOUNDPROOFING-FIBERGLASS MAT 1 IN. THICK BULK ITEM --	AR	
-23	0700105-396		PANEL-CABIN TOP SIDE SOUNDPROOFING	2	
-24	0400129-64		LIGHT SEAL WEU 0414029-1	1	H
	0414029-1		LIGHT SEAL	1	J

NOTE. *GIVE DIMENSIONS WHEN ORDERING

NOTE. #THIS PART NUMBER MUST HAVE A SECOND DASH NUMBER ADDED TO DENOTE COLOR. REFER TO HOW TO ORDER UPHOLSTERED PARTS-PAGE XII.

NOTE. ¤THIS PART NUMBER MUST HAVE A SECOND DASH NUMBER ADDED TO DENOTE COLOR. REFER TO HOW TO ORDER INTERIOR PARTS-PAGE XIII.

NOTE. %THESE ITEMS ARE INCLUDED IN 0715037-1 HEADLINER ASSY.

A---SERIAL 185-0513 THRU 18502310
SERIAL 18051313 THRU 18052384
B---SERIAL 18051184 THRU 18051312
C---SERIAL 185-0001 THRU 185-0512
D---SERIAL 185-0001 THRU 185-0776
SERIAL 18051184 THRU 18051445
E---SERIAL 185-0777 THRU 18502310
SERIAL 18051446 THRU 18052384
F---SERIAL 185-0001 THRU 185-1149
SERIAL 18051184 THRU 18051774
G---SERIAL 185-1150 THRU 18502310
SERIAL 18051775 THRU 18052384
H---SERIAL 185-0001 THRU 18501832
SERIAL 18051184 THRU 18052175
J---SERIAL 18501833 THRU 18502310
SERIAL 18052176 THRU 18052384

Upholstery (Cont)

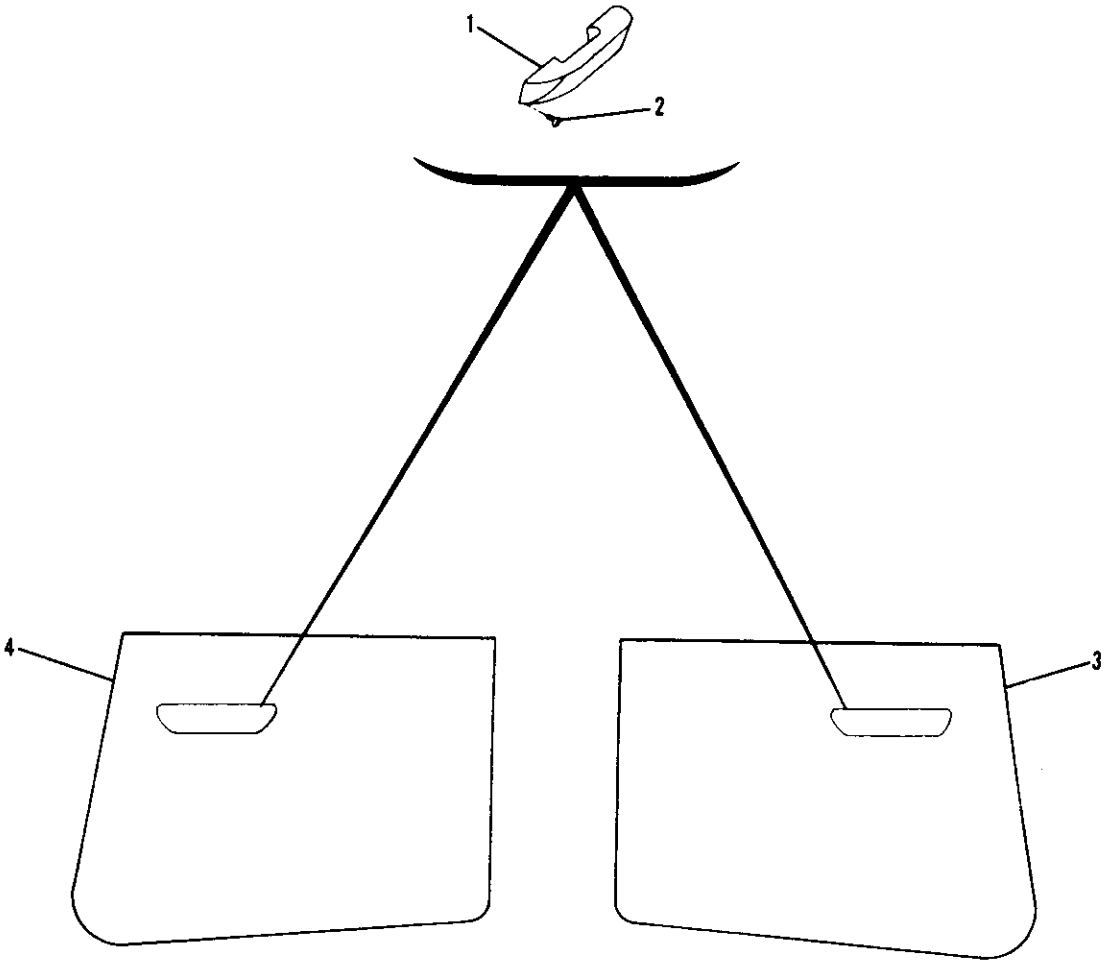

Figure 54. Cabin Doors Upholstery Installation

FIGURE AND INDEX NO.	PART NUMBER	DESCRIPTION 1 2 3 4 5 6 7	UNITS PER ASSY	USABLE ON CODE
54 -		UPHOLSTERY INSTALLATION-CABIN DOORS ----------	NP	
- 1		DOOR PULL ASSEMBLY ORDER 1414082-20 & SEE NOTE % --------	NP	A
	1414082-7	ARMREST ASSEMBLY ----------	2	B
	1414082-14	ARMREST ASSEMBLY ----------	2	C
	1414082-18	ARMREST ASSEMBLY ----------	2	D
	1414082-20 %	ARMREST ASSEMBLY ----------	2	J
	0514078-5 #	ARMREST ASSEMBLY ----------	2	K
		ATTACHING PARTS		
- 2	AN520-416R20	SCREW ----------	2	A
	AN960C416L	WASHER ----------	2	A
	1210054-1	SPACER ----------	2	A
	S1021Z10-16	SCREW ----------	2	E
		---*---		
	1414082-6	PAD ASSEMBLY-ARMREST PEARL BEIGE ----------	1	B
	1414082-13	PAD ASSEMBLY-ARMREST CLOUD GRAY WEU 1414082-22 ----	1	G
	1414082-22	PAD ASSEMBLY-ARMREST CLOUD GRAY ----------	1	G
	1414082-21	PAD ASSEMBLY-ARMREST BLACK ----------	1	J
		ATTACHING PARTS		
	S1021Z8-8	SCREW ----------	2	E
		---*---		
- 3	0700105-273	PANEL-UPHOLSTERY DOOR LH DELUXE 185 ONLY ----------	1	A
	0700114-9 ¤	PANEL-UPHOLSTERY DOOR LH UTILITY ----------	1	F
	0715015-9 ¤	PANEL-UPHOLSTERY DOOR LH ----------	1	H
- 4	0700105-274	PANEL-UPHOLSTERY DOOR RH DELUXE 185 ONLY ----------	1	A
	0700114-10 ¤	PANEL-UPHOLSTERY DOOR RH UTILITY ----------	1	F
	0715015-10 ¤	PANEL-UPHOLSTERY DOOR RH ----------	1	H
		ATTACHING PARTS		
	807	CLIP AU-VE-CO ----------	13	A
	49265F938	STUD UC ----------	AR	E
		---*---		
	81 *	SOUNDPROOFING-FIBERGLASS MAT 1 IN THICK BULK ITEM ---	AR	

NOTE. *GIVE DIMENSIONS WHEN ORDERING

NOTE. %WHEN INITIALLY ORDERING THIS PART FOR AIRCRAFT SERIALS 185-0001 THRU 185-0512 ALSO ORDER 1 0711774-1 BKT ASSY, 1 0711774-2 BKT ASSY & 2 S1021Z10-16 SCREWS.

NOTE. ¤THIS PART NUMBER MUST HAVE A SECOND DASH NUMBER ADDED TO DENOTE COLOR. REFER TO HOW TO ORDER INTERIOR PARTS-PAGE XIII.

NOTE. #THIS PART NUMBER MUST HAVE A SECOND DASH NUMBER ADD TO DENOTE COLOR. REFER TO HOW TO ORDER UPHOLSTERED PARTS-SEE PAGE XII.

A---SERIAL 185-0001 THRU 185-0512
B---SERIAL 185-0513 THRU 1850776
SERIAL 18051184 THRU 18051445
C---SERIAL 185-0777 THRU 185-0967
SERIAL 18051446 THRU 18051607
D---SERIAL 185-0968 THRU 185-1599
SERIAL 18051608 THRU 18052103
E---SERIAL 185-0513 THRU 18502310
SERIAL 18051184 THRU 18052384
F---SERIAL 185-0001 THRU 185-1599
SERIAL 18051184 THRU 18052103
G---SERIAL 185-0777 THRU 185-1599
SERIAL 18051446 THRU 18052103
H---SERIAL 18501600 THRU 18502310
SERIAL 18052104 THRU 18052384
J---SERIAL 18501600 THRU 18502277
SERIAL 18052104 THRU 18052374
K---SERIAL 18502278 THRU 18502310
SERIAL 18052375 THRU 18052384

Upholstery (Cont)

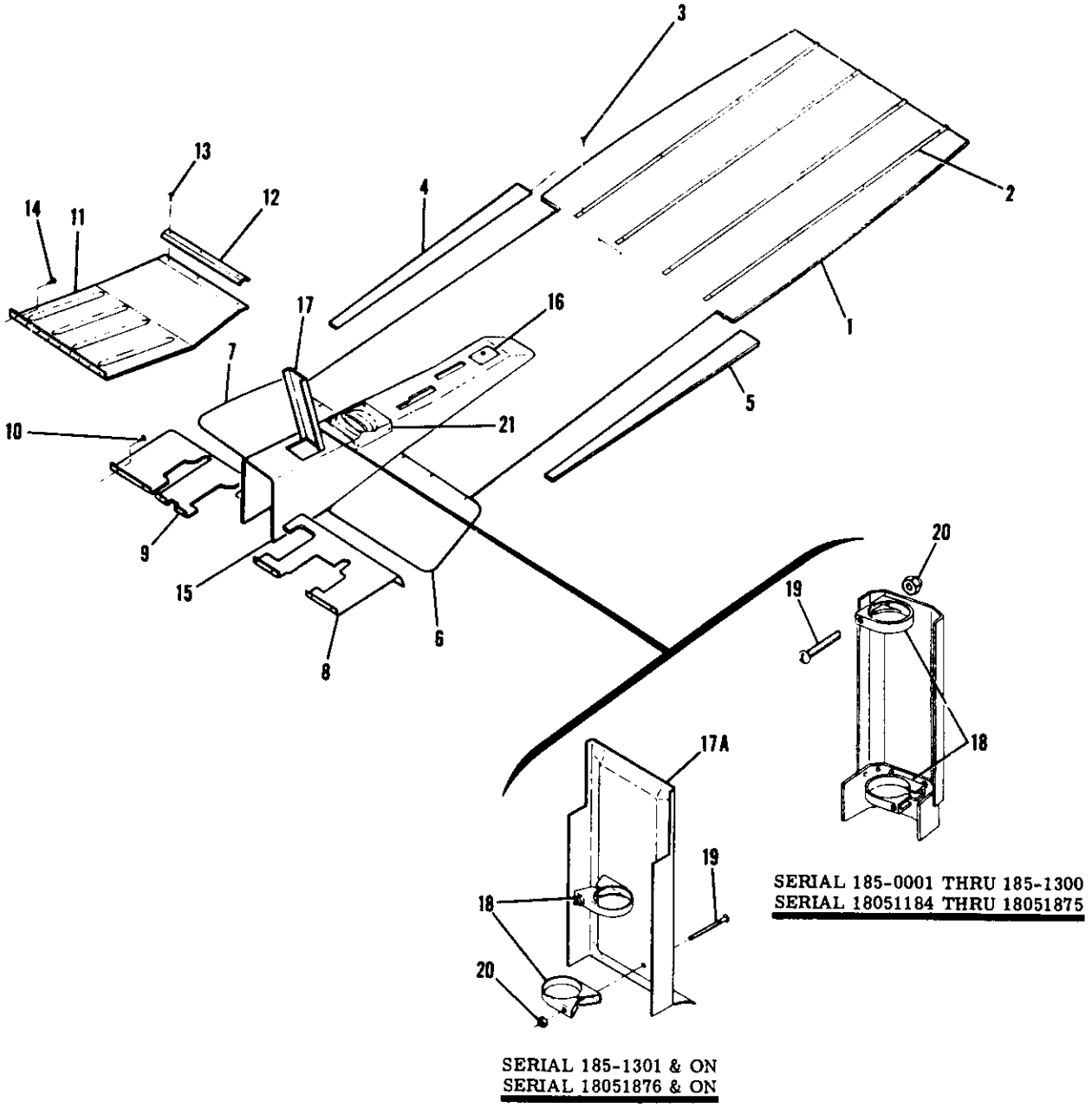

Figure 55. Floorboard Upholstery Installation

FIGURE AND INDEX NO.	PART NUMBER		DESCRIPTION 1 2 3 4 5 6 7	UNITS PER ASSY	USABLE ON CODE
55 -			UPHOLSTERY INSTALLATION-FLOORBOARD & BAGGAGE COMPARTMENT ------	NP	A
- 1	0700114-29		FLOOR COVERING ----------	1	F
	0700114-49	#	FLOOR COVERING ----------	1	S
	0700114-61	#	FLOOR COVERING ASSEMBLY ----------	1	T
- 2	0711085-1		RUNNER ----------	4	H
			ATTACHING PARTS		
- 3	S1021Z8-10		SCREW ----------	4	H
			---*---		
- 4	0700114-50	#	PANEL-OUTER RH ----------	1	G
	0700114-8		PANEL-OUTER RH ----------	1	F
- 5	0700114-51	#	PANEL-OUTER LH ----------	1	G
	0700114-7		PANEL-OUTER LH ----------	1	F
- 6	0511475-1		KICKPLATE-LH ----------	1	Q
	0511475-7		KICKPLATE-LH ----------	1	R
- 7	0700101-144		KICKPLATE-RH USED WITH DUAL CONTROLS ----------	1	D
	0511475-2		KICKPLATE-RH USED WITH DUAL CONTROLS ----------	1	E
	0511475-8		KICKPLATE-RH USED WITH DUAL CONTROLS ----------	1	R
			ATTACHING PARTS		
	S1021Z6-8		SCREW ----------	4	
			---*---		
- 8	0713001-3		SHIELD-RUDDER BAR LH ----------	1	
- 9	0713001-2		SHIELD-RUDDER BAR RH USED WITH DUAL CONTROLS ----------	1	
			ATTACHING PARTS		
-10	S1021Z8-8		SCREW ----------	8	
			---*---		
-11	0713049-2		SHIELD-RUDDER BAR RH ----------	1	
			ATTACHING PARTS		
-12	0713049-7		RETAINER ----------	1	
-13	S1021Z8-14		SCREW ----------	3	
-14	S1021Z8-6		SCREW ----------	7	
			---*---		
-15	0700105-433		TUNNEL ASSEMBLY ----------	1	B
	0511168		PLACARD ----------	1	B
	0700114-53	¤	TUNNEL ----------	1	J
	0700191-1	¤	COVER-TUNNEL ----------	1	U
	0700191-3	¤	COVER-TUNNEL USED WITH RUDDER TRIM ONLY ----------	1	X
	0700114-27		TUNNEL ----------	1	K
	0700114-54-434		TUNNEL ----------	1	L
	0700114-54	¤	TUNNEL ----------	1	M
	0700191-2	¤	COVER-TUNNEL ----------	1	V
			ATTACHING PARTS		
	S1021Z10-6		SCREW ----------	2	
			---*---		
-16	0716106-1		PLACARD-FUEL INDICATOR ----------	1	F
	0716106-2		PLACARD-FUEL INDICATOR USED WITH EXTENDED RANGE FUEL TANK ---------	1	F
			ATTACHING PARTS		
	S1021Z8-10		SCREW ----------	2	
	S1021Z8-6		SCREW ----------	2	
			---*---		
-17	0700105-266		SHIELD ASSEMBLY ----------	1	N
	0512046-1	¤	SHIELD ASSEMBLY ----------	1	P
-17A	0760006-1	¤	SHIELD-CONTROL YOKE ----------	1	W
			ATTACHING PARTS		
-18	0411840		CLAMP ----------	2	
-19	AN515-6R36		SCREW ----------	2	
-20	NAS679A06		NUT ----------	2	
			---*---		
	B1	*	SOUNDPROOFING-FIBERGLASS MAT 1 IN. THICK BULK ITEM --	AR	

CONTINUED ON NEXT PAGE

FIGURE AND INDEX NO.	PART NUMBER	DESCRIPTION 1 2 3 4 5 6 7	UNITS PER ASSY	USABLE ON CODE
55 -21	0713093-2-243	COVER-RUDDER TRIM WHEEL ----------	1	C
	0713093-2 ¤	COVER-RUDDER TRIM WHEEL ----------	1	M
	0713257-1 ¤	COVER-RUDDER TRIM WHEEL ----------	1	V
		ATTACHING PARTS		
	S1021Z6-8	SCREW ----------	4	
		---*---		
		NOTE. *GIVE DIMENSIONS WHEN ORDERING		
		NOTE. #THIS PART NUMBER MUST HAVE A SECOND DASH NUMBER ADDED TO DENOTE COLOR. REFER TO HOW TO ORDER UPHOLSTERED PARTS-PAGE XII.		
		NOTE. ¤THIS PART NUMBER MUST HAVE A SECOND DASH NUMBER ADDED TO DENOTE COLOR. REFER TO HOW TO ORDER INTERIOR PARTS-PAGE XIII.		
		A---SERIAL 185-0001 THRU 18502310		
		SERIAL 18051184 THRU 18052384		
		FOR 185-0001 THRU 185-0512 DELUXE		
		UPHOLSTERY SEE FIGURE 56.		
		B---SERIAL 18051184 THRU 18051312		
		C---SERIAL 185-0001 THRU 185-0776		
		D---SERIAL 185-0001 THRU 185-0237		
		E---SERIAL 185-0238 THRU 185-0967		
		SERIAL 18051184 THRU 18051607		
		F---SERIAL 185-0001 THRU 185-0512		
		G---SERIAL 185-0513 THRU 18502310		
		SERIAL 18051184 THRU 18052384		
		H---SERIAL 185-0001 THRU 18502310		
		SERIAL 18051313 THRU 18052384		
		J---SERIAL 18051313 THRU 18051875		
		K---SERIAL 185-0001 THRU 185-0655		
		L---SERIAL 185-0656 THRU 185-0776		
		M---SERIAL 185-0777 THRU 185-1300		
		N---SERIAL 185-0001 THRU 185-0776		
		SERIAL 18051184 THRU 18051445		
		P---SERIAL 185-0777 THRU 185-1300		
		SERIAL 18051446 THRU 18051875		
		Q---SERIAL 185-0001 THRU 185-0967		
		SERIAL 18051184 THRU 18051607		
		R---SERIAL 185-0968 THRU 185-1149		
		SERIAL 18051608 THRU 18051774		
		S---SERIAL 185-0513 THRU 185-1149		
		SERIAL 18051184 THRU 18051774		
		T---SERIAL 185-1150 THRU 18502310		
		SERIAL 18051775 THRU 18052384		
		U---SERIAL 18051876 THRU 18052384		
		V---SERIAL 185-1301 THRU 18502310		
		SERIAL 18051994 THRU 18052384		
		W---SERIAL 185-1301 THRU 18502310		
		SERIAL 18051876 THRU 18052384		
		X---SERIAL 18051994 THRU 18052384		

Upholstery (Cont)

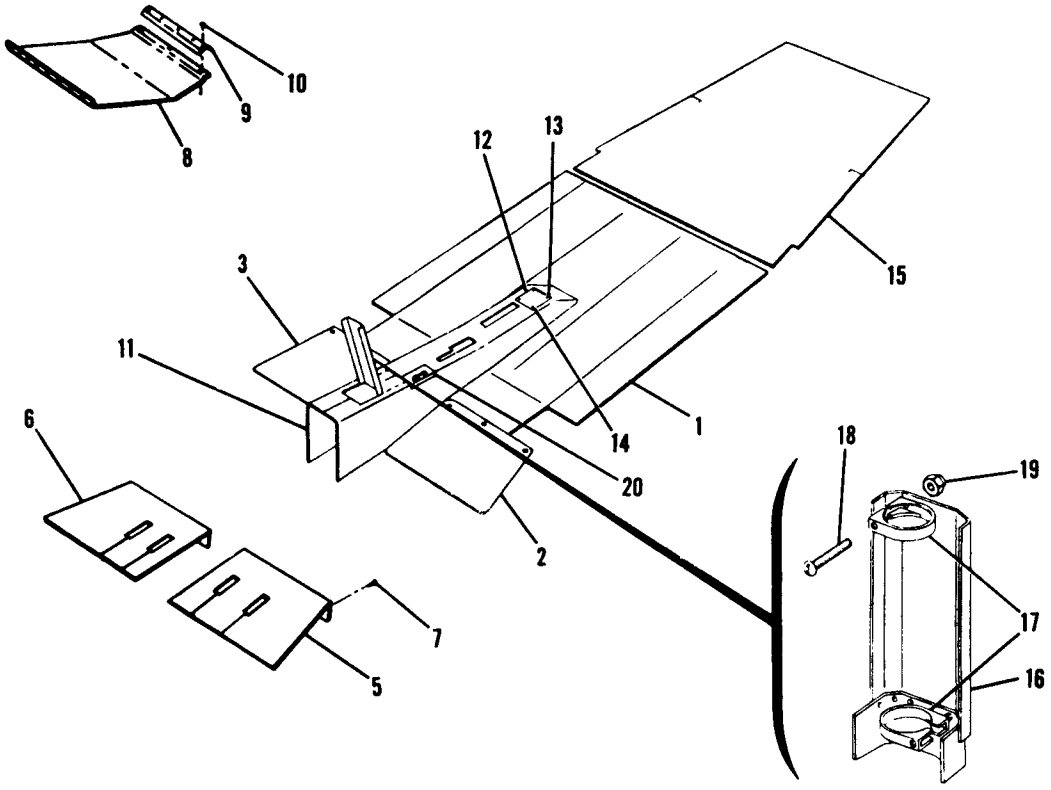

SERIAL 185-0001 THRU 185-0512 DELUXE

Figure 56. Floorboards Upholstery Installation (DeLuxe)

FIGURE AND INDEX NO.	PART NUMBER	DESCRIPTION 1 2 3 4 5 6 7	UNITS PER ASSY	USABLE ON CODE
56 -		UPHOLSTERY INSTALLATION-FLOORBOARD DELUXE	NP	C
	0700105-243	CARPET ASSEMBLY-CABIN FLOOR CENTER	1	
	0700105-203	CARPET ASSEMBLY-CABIN FLOOR CENTER USED WITH DUAL CONTROLS	1	
- 1	0700105-201	CARPET-CABIN FLOOR CENTER	1	
		ATTACHING PARTS		
	S1023A4-6	SCREW	11	
	S1066C1	WASHER	11	
		---*---		
- 2	0700101-143	KICK PLATE-CARPET CENTER LH	1	A
	0511475-1	KICK PLATE-CARPET CENTER LH	1	B
- 3	0700101-144 *	KICK PLATE-CARPET CENTER RH USED WITH DUAL CONTROLS	1	
- 4		DELETED, NEVER USED		
- 5	0700105-261	SHIELD ASSEMBLY-RUDDER BAR LH	1	
- 6	0700105-262	SHIELD ASSEMBLY-RUDDER BAR RH USED WITH DUAL CONTROLS	1	
		ATTACHING PARTS		
- 7	S1021Z8-8	SCREW	8	
		---*---		
- 8	0713049-10	SHIELD ASSEMBLY-RUDDER BAR RH	1	
		ATTACHING PARTS		
- 9	0713049-7	RETAINER-SHIELD	1	
-10	S1021Z8-14	SCREW	3	
	S1021Z8-8	SCREW	8	
	S1021Z8-6	SCREW	5	
		---*---		
-11	0700114-27	TUNNEL	1	
-12	0716106-1	PLACARD-FUEL SELECTOR VALVE	1	
	0716106-2	PLACARD-FUEL SELECTOR VALVE USED WITH EXTENDED RANGE FUEL TANK	1	
		ATTACHING PARTS		
-13	S1021Z8-10	SCREW	2	
-14	S1021Z8-6	SCREW	2	
		---*---		
-15	0700100-34	CARPET ASSEMBLY-BAGGAGE COMPARTMENT	1	
		ATTACHING PARTS		
	99608	STUD UC	3	
		---*---		
-16	0700105-266	SHIELD ASSEMBLY-CONTROL TEE	1	
		ATTACHING PARTS		
-17	0411840	CLAMP	2	
-18	AN515-6R36	SCREW	2	
-19	NAS679A06	NUT	2	
		---*---		
-20	0713093-2-243	COVER-RUDDER TRIM WHEEL	1	
		ATTACHING PARTS		
	S1021Z6-8	SCREW	4	
		---*---		

NOTE. * THIS ITEM NOT INCLUDED IN 0700105-243 CARPET ASSEMBLY.

A---SERIAL 185-0001 THRU 185-0237
B---SERIAL 185-0238 THRU 185-0512
C---SERIAL 185-0001 THRU 185-0512

Upholstery (Cont)

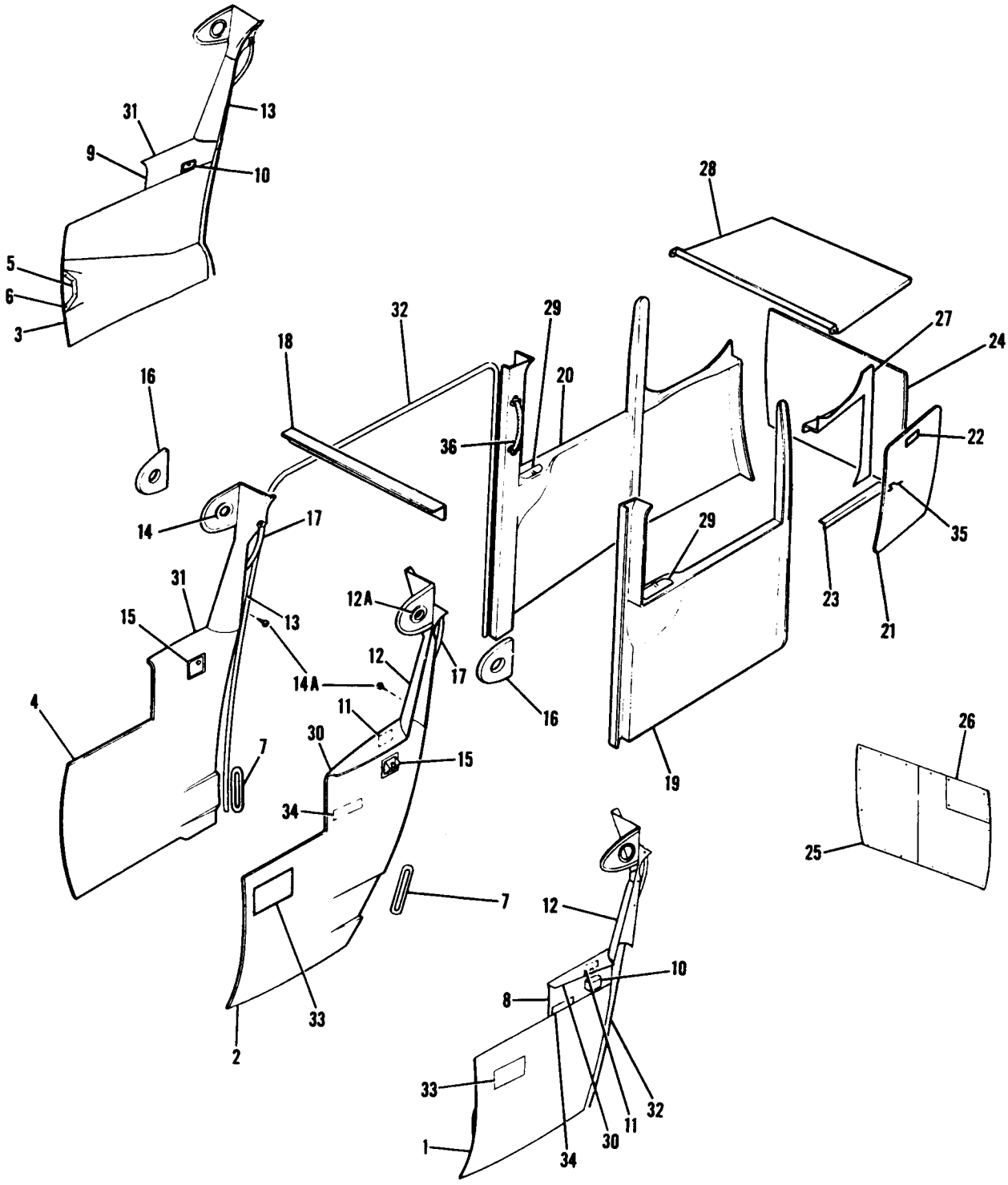

SERIAL 185-0001 THRU 185-1599
SERIAL 18051313 THRU 18052103

Figure 57. Cabin Side Panels & Baggage Compartment Upholstery Installation

FIGURE AND INDEX NO.	PART NUMBER		DESCRIPTION 1 2 3 4 5 6 7	UNITS PER ASSY	USABLE ON CODE
57 -			UPHOLSTERY INSTALLATION-CABIN SIDE PANELS & BAGGAGE COMPARTMENT DELUXE	NP	D
			UPHOLSTERY INSTALLATION-CABIN SIDE PANELS & BAGGAGE COMPARTMENT UTILITY	NP	C
- 1	0700105-253		PANEL ASSEMBLY-SIDEWALL LOWER FRONT LH DELUXE	1	A
- 2	0700105-455		PANEL ASSEMBLY-SIDEWALL FRONT LH DELUXE	1	F
	0700114-11	¤%	PANEL-SIDEWALL FRONT LH	1	P
	0700114-59	¤	PANEL ASSEMBLY-SIDEWALL FRONT LH	1	Q
- 3	0700105-254		PANEL ASSEMBLY-SIDEWALL LOWER FRONT RH DELUXE	1	A
- 4	0700105-456		PANEL ASSEMBLY-SIDEWALL FRONT RH DELUXE	1	F
	0700114-12	¤%	PANEL-SIDEWALL FRONT RH	1	P
	0700114-56	¤	PANEL-SIDEWALL FRONT RH	1	Q
- 5	0700100-192		RETAINER-UPHOLSTERY FORWARD DELUXE	1	B
- 6	S1023A4-6		SCREW	2	
- 7	0515020-1		RETAINER-UPHOLSTERY	2	
			ATTACHING PARTS		
	S1021Z4-6		SCREW	3	
			---*---		
- 8	0713520-1		PANEL ASSEMBLY-SIDEWALL UPPER FRONT LH DELUXE	1	A
- 9	0713520-2		PANEL ASSEMBLY-SIDEWALL UPPER FRONT RH DELUXE	1	A
			ATTACHING PARTS		
	S1021Z8-68		SCREW	AR	
			---*---		
-10	0411030-6		TRAY-ASY RECEPTACLE WHEN EXHAUSTED USE S1762-2	1	
	S1762-2		TRAY-ASH RECEPTACLE	1	
	0411030-5		RETAINER-ASH RECEPTACLE	1	
			ATTACHING PARTS		
	S1021Z4-8		SCREW	2	
	NAS446-1-3		NUT	2	
			---*---		
-11			PLACARD-OPERATIONAL LIMITATIONS SEE FIGURES 2 & 2A	1	
-12	0711133-11		SHIELD ASSEMBLY-FRONT DOORPOST LH CONTAINS SWITCH	1	G
	0711133-21		SHIELD ASSEMBLY-FRONT DOORPOST LH CONTAINS SWITCH	1	H
	0711133-32	¤	SHIELD ASSEMBLY-FRONT DOORPOST LH CUTOUT FOR SWITCH	1	R
	0711133-41	¤	SHIELD-FRONT DOORPOST LH CUTOUT FOR SWITCH	1	U
	0413484-5	¤	SHIELD ASSEMBLY-FRONT DOORPOST LH CUTOUT FOR SWITCH	1	V
	0711133-29	¤	SHIELD ASSEMBLY-FRONT DOORPOST LH NO SWITCH CUTOUT	1	M
	0711133-39	¤	SHIELD-FRONT DOORPOST LH NO SWITCH CUTOUT	1	U
	0413484-3	¤	SHIELD ASSEMBLY-FRONT DOORPOST LH NO SWITCH CUTOUT	1	V
	0711133-6		SHIELD-FRONT DOORPOST LH CUTOUT FOR SWITCH	1	G
	0711133-23		SHIELD-FRONT DOORPOST LH CUTOUT FOR SWITCH	1	H
-12A	0413235		GROMMET	1	P
-13	0711133-2		SHIELD ASSEMBLY-FRONT DOORPOST RH	1	G
	0711133-22	¤	SHIELD ASSEMBLY-FRONT DOORPOST RH	1	M
	0711133-40	¤	SHIELD-FRONT DOORPOST RH	1	Q
-14	0413235		GROMMET	1	P
-14A	S1021A4-6		SCREW	3	
-15	0411030-6		TRAY-ASH RECEPTACLE WHEN EXHAUSTED USE S1762-2	2	Y
	S1762-2		TRAY-ASH RECEPTACLE	2	X
	0411030-5		RETAINER-ASH RECEPTACLE	2	
			ATTACHING PARTS		
	S1021Z4-8		SCREW	2	
	NAS446-1-3		NUT	2	
			---*---		
-16	0511001-133		SOUNDPROOFING SHIELD	2	
-17	S1362-22	**	STRAP-ASSIST	2	B
	S1362-5		HANDLE ASSEMBLY-ASSIST	2	E
	S1362-6		HANDLE ASSEMBLY-ASSIST	2	L
			ATTACHING PARTS		
	AN507-1032-16		SCREW	2	
			---*---		
-18	0511130		SHIELD-FRONT SPAR	1	
			ATTACHING PARTS		
	49265F938		STUD UC	3	
			---*---		
-19	0700114-33		PANEL ASSEMBLY-AFT LH DELUXE	1	B
	0700114-13		PANEL AFT LH UTILITY	1	B
	0700114-47	¤	PANEL-AFT LH	1	J
-20	0700114-32		PANEL ASSEMBLY-AFT RH DELUXE	1	B
	0700114-14		PANEL AFT RH UTILITY	1	B
	0700114-48	¤	PANEL-AFT RH	1	J

CONTINUED ON NEXT PAGE

FIGURE AND INDEX NO.	PART NUMBER	DESCRIPTION 1 2 3 4 5 6 7	UNITS PER ASSY	USABLE ON CODE
57 -21	0700114-35-273	PANEL ASSEMBLY-BAGGAGE DOOR	1	B
	0700114-35-434	PANEL ASSEMBLY-BAGGAGE DOOR	1	E
	0700114-35 ¤	PANEL ASSEMBLY-BAGGAGE DOOR	1	W
	0717000-4 ¤	PANEL ASSEMBLY-BAGGAGE DOOR	1	X
		ATTACHING PARTS		
	XH99608-F1099	STUD	8	
		---*---		
-22	0713224-1	PLACARD-BAGGAGE DOOR WHEN EXHAUSTED USE 1205015-1	1	Z
	1205015-1	PLACARD-BAGGAGE DOOR	1	AA
		ATTACHING PARTS		
	S1021Z4-6	SCREW	2	
		---*---		
-23	0311623-1	SCUFF PLATE-BAGGAGE COMPARTMENT FLOOR	1	
		ATTACHING PARTS		
	S1021Z4-4	SCREW	3	
		---*---		
-24	0711079-1 ¤	TRAY ASSEMBLY USE ON ALL EXCEPT FOUR PLACE	1	
	0700105-202	PANEL ASSEMBLY FOUR PLACE ONLY	1	S
	0711079-6 ¤	PANEL ASSEMBLY FOUR PLACE ONLY	1	T
-25	0700105-418	PANEL ASSEMBLY USE WHEN OXYGEN SYSTEM IS INSTALLED	1	N
		ATTACHING PARTS		
	49265F938	STUD UC	18	
	49265F938	STUD UC USE WHEN OXYGEN SYSTEM IS INSTALLED	19	N
		---*---		
-26	0700105-419	COVER ASSEMBLY USE WHEN OXYGEN SYSTEM IS INSTALLED	1	N
-27	0700114-20 ¤	FAIRING-LH STA 108.0	1	
-28	0513013-12	BAGGAGE SHELF	1	
		ATTACHING PARTS		
	AN3-3A	BOLT	4	
	S1021Z6-6	SCREW	9	
		---*---		
-29	0411030-6	TRAY-ASH RECEPTACLE WHEN EXHAUSTED USE S1762-2	2	B
	S1762-2	TRAY-ASH RECEPTACLE	1	B
	0411030-5	RETAINER-ASH RECEPTACLE	2	B
		ATTACHING PARTS		
	S1021Z4-8	SCREW	2	B
	NAS446-1-3	NUT	2	B
		---*---		
-30	0700105-463	CHANNEL-UPHOLSTERY LH	1	
-31	0700105-464	CHANNEL-UPHOLSTERY RH	1	
-32	0700105-407 ¤	WINDLACE ASSEMBLY-UPHOLSTERY	2	
		ATTACHING PARTS		
	S1021Z4-4	SCREW	44	
		---*---		
-33	0500103-133	HOLDER-PLACARD	1	
-34		PLACARD-HOT AIR INDUCTION SEE FIGURE 2	1	
-35	S1273-1	HANDLE-BAGGAGE DOOR PULL	1	
		ATTACHING PARTS		
	AN515-8R8	SCREW	2	
		---*---		
	B1 *	SOUNDPROOFING-FIBERGLASS MAT 1 IN. THICK BULK ITEM --	AR	

CONTINUED ON NEXT PAGE

FIGURE AND INDEX NO.	PART NUMBER	DESCRIPTION 1 2 3 4 5 6 7	UNITS PER ASSY	USABLE ON CODE
57 -36	S1362-5	HANDLE ASSEMBLY-ASSIST	2	K
	S1362-6	HANDLE ASSEMBLY-ASSIST	2	L
		ATTACHING PARTS	2	
	AN507-1032R10	SCREW		
		---*---		
		NOTE. *GIVE DIMENSIONS WHEN ORDERING		
		NOTE. ZTHESE PARTS ARE USED ON UTILITY UPHOLSTERY INSTALLATIONS 185-0001 THRU 185-0967 & 18051313 THRU 18051607. THEY ARE ALSO USED ON DELUXE UPHOLSTERY INSTALLATION 185-0513 THRU 185-0967 & 18051313 THRU 18051607.		
		NOTE. ¤THIS PART NUMBER MUST HAVE A SECOND DASH NUMBER ADDED TO DENOTE COLOR. REFER TO HOW TO ORDER INTERIOR PARTS-PAGE XIII.		
		NOTE. #THIS PART NUMBER MUST HAVE A SECOND DASH NUMBER ADDED TO DENOTE COLOR. REFER TO HOW TO ORDER UPHOLSTERED PARTS-PAGE XII.		
		NOTE. **WHEN INITIALLY ORDERING THIS PART A QUANTITY OF 2 SHOULD BE ORDERED.		
		A---SERIAL 185-0001 THRU 185-0237		
		B---SERIAL 185-0001 THRU 185-0512		
		C---SERIAL 185-0001 THRU 185-1599		
		SERIAL 18051313 THRU 18052103		
		D---SERIAL 185-0001 THRU 185-0512		
		SERIAL 18051313 THRU 18052103		
		E---SERIAL 185-0513 THRU 185-0776		
		SERIAL 18051313 THRU 18051445		
		F---SERIAL 185-0238 THRU 185-0512		
		G---SERIAL 185-0001 THRU 185-0538		
		H---SERIAL 185-0539 THRU 185-0776		
		SERIAL 18051313 THRU 18051445		
		J---SERIAL 185-0513 THRU 185-1599		
		SERIAL 18051313 THRU 18052103		
		K---SERIAL 185-0654 THRU 185-0776		
		SERIAL 18051313 THRU 18051445		
		L---SERIAL 185-0777 THRU 185-1599		
		SERIAL 18051446 THRU 18052103		
		M---SERIAL 185-0539 THRU 185-0967		
		SERIAL 18051313 THRU 18051607		
		N---SERIAL 185-0001 THRU 185-0776		
		SERIAL 18051313 THRU 18051445		
		P---SERIAL 185-0001 THRU 185-0967		
		SERIAL 18051313 THRU 18051607		
		Q---SERIAL 185-0968 THRU 185-1599		
		SERIAL 18051608 THRU 18052103		
		R---SERIAL 185-0777 THRU 185-0967		
		SERIAL 18051446 THRU 18051607		
		S---SERIAL 185-0001 THRU 185-1149		
		SERIAL 18051313 THRU 18051774		
		T---SERIAL 185-1150 THRU 185-1599		
		SERIAL 18051775 THRU 18052103		
		U---SERIAL 185-0968 THRU 185-1197 & 185-1200		
		SERIAL 18051608 THRU 18051823		
		V---SERIAL 185-1198, 185-1199, 185-1201 THRU 185-1599		
		SERIAL 18051824 THRU 18052103		
		W---SERIAL 185-0777 THRU 185-1300		
		SERIAL 18051446 THRU 18051875		
		X---SERIAL 185-1301 THRU 185-1599		
		SERIAL 18051876 THRU 18052103		
		Y---SERIAL 185-0001 THRU 185-1300		
		SERIAL 18051313 THRU 18051875		
		Z---SERIAL 185-0001 THRU 185-1447		
		SERIAL 18051313 THRU 18051993		
		AA---SERIAL 185-1448 THRU 185-1599		
		SERIAL 18051994 THRU 18052103		

Upholstery (Cont)

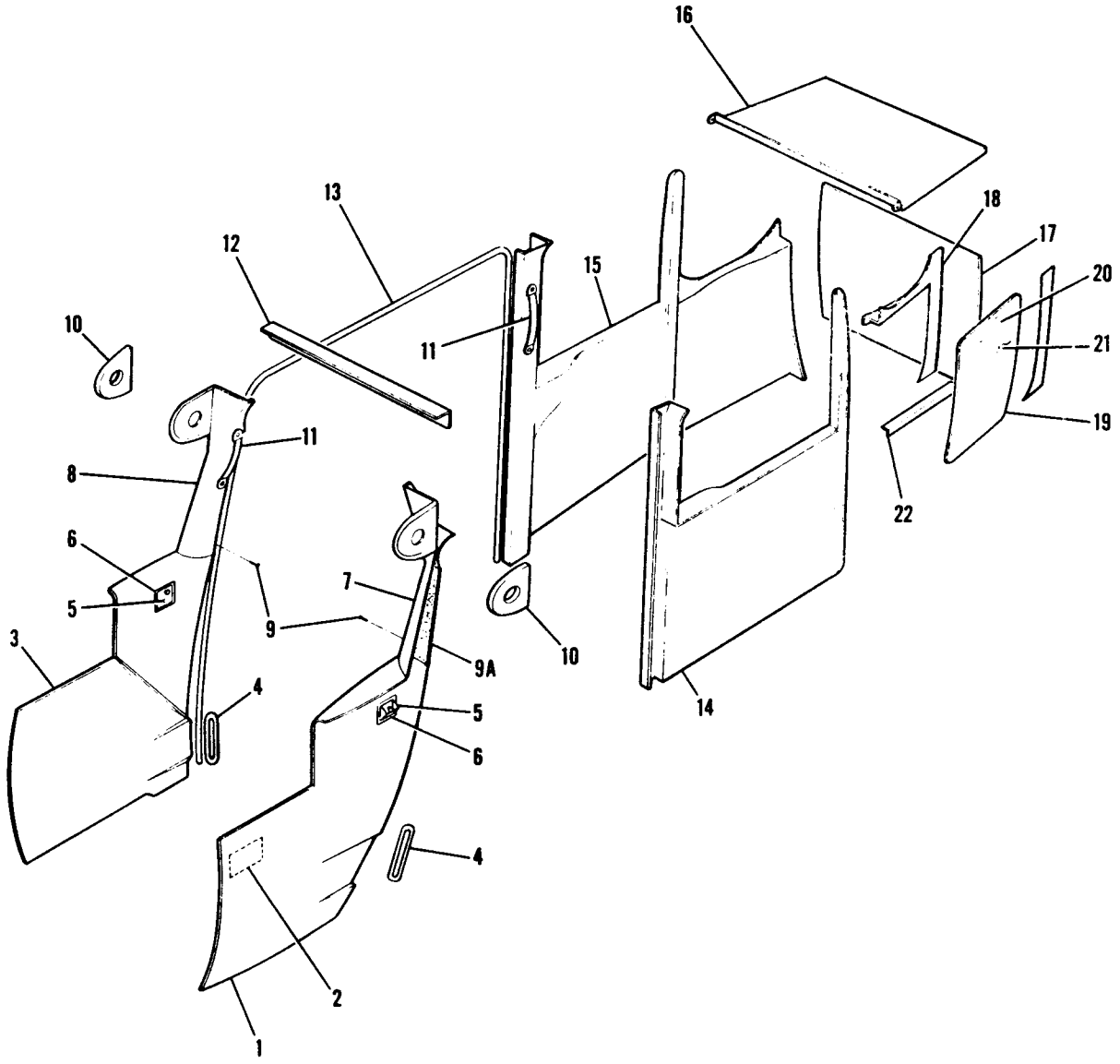

SERIAL 18501600 THRU 18502310
SERIAL 18052104 THRU 18052384

Figure 57A. Cabin Side Panel & Baggage Compartment Upholstery Installation

FIGURE AND INDEX NO.	PART NUMBER		DESCRIPTION 1 2 3 4 5 6 7	UNITS PER ASSY	USABLE ON CODE
57A-			UPHOLSTERY INSTALLATION-CABIN SIDE PANELS & BAGGAGE COMPARTMENT	NP	A
- 1	0715015-3	#	PANEL ASSEMBLY-FRONT LH	1	
- 2	0500103-133		HOLDER-PLACARD	1	
- 3	0715015-6	#	PANEL ASSEMBLY-FRONT RH	1	
- 4	0515020-1		RETAINER-UPHOLSTERY	2	
			ATTACHING PARTS		
	S1021Z4-6		SCREW	3	
			---*---		
- 5	S1762-2		TRAY-ASH RECEPTACLE	2	
- 6	0411030-5		RETAINER-ASH RECEPTACLE	2	
			ATTACHING PARTS		
	S1021Z4-8		SCREW	2	
	NAS446-1-3		NUT	2	
			---*---		
- 7	0413484-3	¤	SHIELD ASSEMBLY-FRONT DOORPOST LH NO SWITCH CUTOUT	1	D
	0413484-15	¤	SHIELD ASSEMBLY-FRONT DOORPOST LH NO SWITCH CUTOUT	1	E
	0413484-5	¤	SHIELD ASSEMBLY-FRONT DOORPOST LH CUTOUT FOR SWITCH	1	D
	0413484-16	¤	SHIELD ASSEMBLY-FRONT DOORPOST LH CUTOUT FOR SWITCH	1	E
- 8	0711133-40	¤	SHIELD-FRONT DOORPOST RH	1	D
	0711133-72	¤	SHIELD-FRONT DOORPOST RH	1	E
			ATTACHING PARTS		
- 9	S1021A4-6		SCREW	4	
			---*---		
- 9A	0513425-1		PAD-DOORPOST SHIELD	2	C
-10	0511001-133		SOUNDPROOFING-SHIELD	2	
-11	S1362-12		HANDLE ASSEMBLY-ASSIST	4	
			ATTACHING PARTS		
	AN507-1032R10		SCREW	2	
			---*---		
-12	0511130	¤	SHIELD-FRONT SPAR	1	
			ATTACHING PARTS		
	S1898-2		STUD	3	
			---*---		
-13	0700105-407	#	WINDLACE ASSEMBLY	2	
			ATTACHING PARTS		
	S1021Z4-4		SCREW	44	
			---*---		
-14	0715015-11	¤	PANEL-AFT LH	1	
-15	0715015-12	¤	PANEL-AFT RH	1	
-16	0513013-12	¤	BAGGAGE SHELF	1	
			ATTACHING PARTS		
	AN3-3A		BOLT	4	
	S1021Z6-6		SCREW	9	
			---*---		
-17	0711079-1	¤	TRAY ASSEMBLY	1	
	0711079-6	¤	TRAY ASSEMBLY USED WITH BAGGAGE SHELF ONLY	1	
			ATTACHING PARTS		
	49265F938		STUD UC	AR	
			---*---		
-18	0700114-20	¤	FAIRING-LH	1	
-19	0715015-13	¤	PANEL ASSEMBLY-BAGGAGE DOOR	1	B
	0715015-14	¤	PANEL ASSEMBLY-BAGGAGE DOOR	1	C
			ATTACHING PARTS		
	S1950-4		SCREW	AR	
			---*---		
-20	SEE FIG 2B & 2C		PLACARD-BAGGAGE DOOR	1	
-21	S1273-1		HANDLE-BAGGAGE DOOR PULL	1	
			ATTACHING PARTS		
	AN515-8R8		SCREW	2	
			---*---		

CONTINUED ON NEXT PAGE

FIGURE AND INDEX NO.	PART NUMBER	DESCRIPTION 1 2 3 4 5 6 7	UNITS PER ASSY	USABLE ON CODE
57A-22	0311623-1	SCUFF PLATE-BAGGAGE COMPARTMENT FLOOR ----------	1	
		ATTACHING PARTS		
	S1021Z4-4	SCREW ----------	3	
		---*---		
		NOTE. *THIS PART NUMBER MUST HAVE A SECOND DASH NUMBER ADDED TO DENOTE COLOR. REFER TO HOW TO ORDER UPHOLSTERED PARTS-PAGE XII.		
		NOTE. ¤THIS PART NUMBER MUST HAVE A SECOND DASH NUMBER ADDED TO DENOTE COLOR. REFER TO HOW TO ORDER UPHOLSTERED PARTS-PAGE XIII.		
		A---SERIAL 18052104 THRU 18052384		
		SERIAL 18501600 THRU 18502310		
		B---SERIAL 18052104 THRU 18052175		
		SERIAL 18501600 THRU 18501832		
		C---SERIAL 18052176 THRU 18052384		
		SERIAL 18501833 THRU 18502310		
		D---SERIAL 18052104 THRU 18052284		
		SERIAL 18501600 THRU 18502090		
		E---SERIAL 18052285 THRU 18052384		
		SERIAL 18502091 THRU 18502310		

FIGURE AND INDEX NO.	PART NUMBER	DESCRIPTION 1 2 3 4 5 6 7	UNITS PER ASSY	USABLE ON CODE
58 -		UPHOLSTERY INSTALLATION-CABIN SIDE PANELS & BAGGAGE COMPARTMENT	NP	A
- 1	0700114-11	PANEL-SIDEWALL FRONT LH	1	
- 2	0700114-12	PANEL-SIDEWALL FRONT RH	1	
- 3	0515020-1	RETAINER-UPHOLSTERY	2	
		ATTACHING PARTS		
	S1021Z4-6	SCREW	4	
		---*---		
- 4	0411030-6	TRAY-ASH RECEPTACLE	2	
	0411030-5	RETAINER-ASH RECEPTACLE	2	
		ATTACHING PARTS		
	S1021Z4-8	SCREW	2	
	NAS446-1-3	NUT	2	
		---*---		
- 5	0713207-1	PLACARD-OPERATIONAL LIMITATIONS	1	

CONTINUED ON NEXT PAGE

Upholstery (Cont)

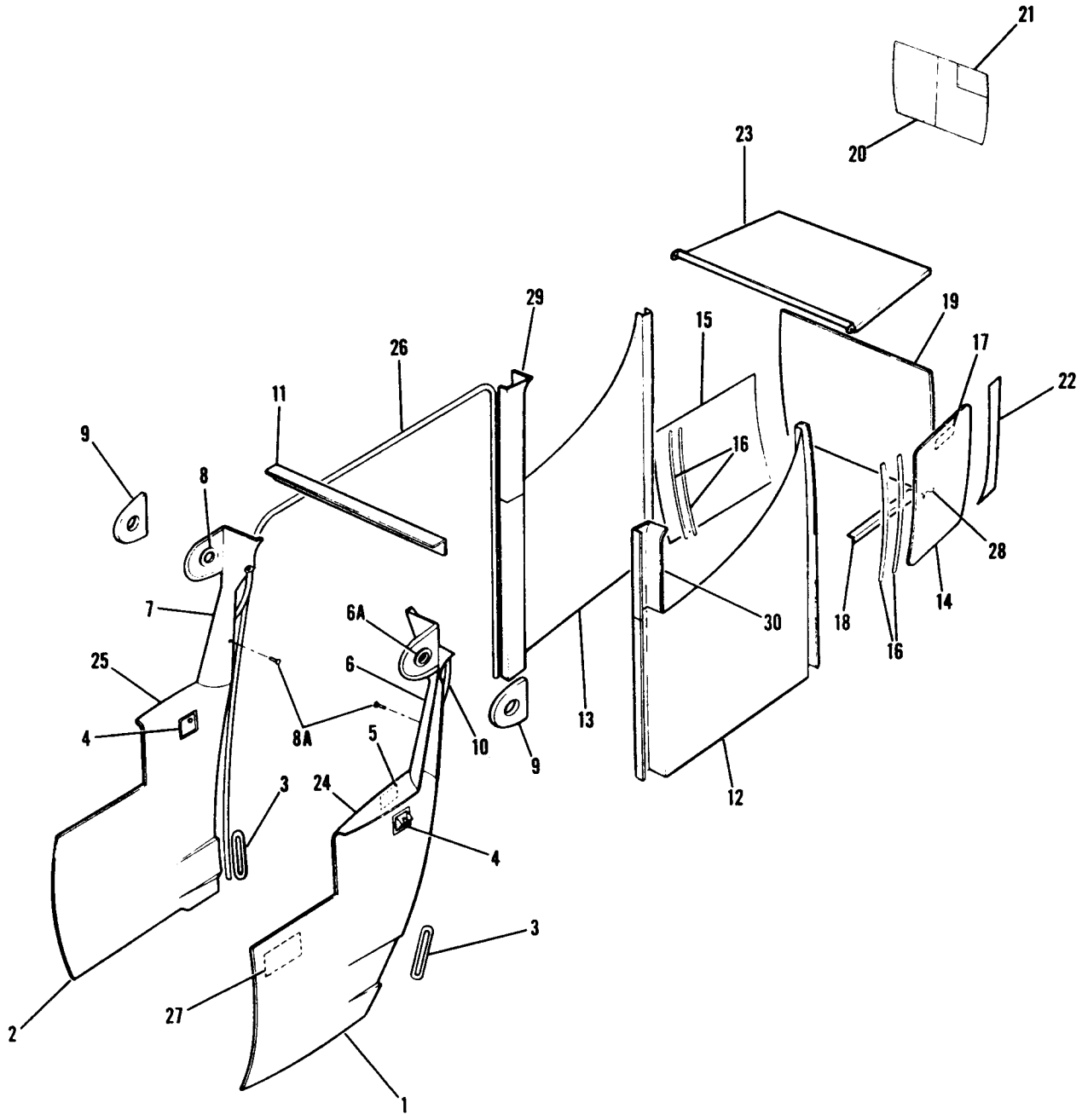

SERIAL 18051184 THRU 18051312

Figure 58. Cabin Side Panels & Baggage Compartment Upholstery Installation

FIGURE AND INDEX NO.	PART NUMBER	DESCRIPTION 1 2 3 4 5 6 7	UNITS PER ASSY	USABLE ON CODE
58 - 6	0711133-11	SHIELD ASSEMBLY-DOORPOST UPPER LH CONTAINS SWITCH -------	1	B
	0711133-21	SHIELD ASSEMBLY-DOORPOST UPPER LH CONTAINS SWITCH -------	1	C
	0711133-29	SHIELD ASSEMBLY-DOORPOST UPPER LH NO SWITCH CUTOUT ------	1	C
	0711133-6	SHIELD-DOORPOST UPPER LH CUTOUT FOR SWITCH ----------	1	B
	0711133-23	SHIELD-DOORPOST UPPER LH CUTOUT FOR SWITCH ----------	1	C
- 6A	0413235	GROMMET ----------	1	
- 7	0711133-2	SHIELD-DOOR POST UPPER RH ----------	1	B
	0711133-22	SHIELD-DOORPOST UPPER RH ----------	1	C
- 8	0413235	GROMMET ----------	1	
- 8A	S1021Z4-6	SCREW ----------	6	
- 9	0511001-133	SOUNDPROOFING SHIELD ----------	2	
-10	S1362-5	STRAP-ASSIST ----------	2	
		ATTACHING PARTS		
	AN507-1032-10	SCREW ----------	2	
		---*---		
-11	0511130	SHIELD-FRONT SPAR ----------	1	
		ATTACHING PARTS		
	49265F938	STUD ----------	3	
		---*---		
-12	0700105-479	PANEL-AFT LH ----------	1	
-13	0700105-480	PANEL-AFT RH ----------	1	
-14	0700114-35-273	PANEL ASSEMBLY-BAGGAGE DOOR ----------	1	
		ATTACHING PARTS		
	99608K2215	STUD UC ----------	8	
		---*---		
-15	0700105-204	PANEL ASSEMBLY-BAGGAGE COMPARTMENT RH ----------	1	
-16	S202R8	CHANNEL-RUBBER MOULDING BULK ITEM ----------	AR	
-17	0512166-1	PLACARD-LOAD LIMITS ----------	1	
		ATTACHING PARTS		
	S1021Z4-6	SCREW ----------	2	
		---*---		
-18	0311623-1	SCUFF PLATE ----------	1	
		ATTACHING PARTS		
	S1021Z4-4	SCREW ----------	3	
		---*---		
-19	0711079-1	TRAY ASSEMBLY USE ON ALL EXCEPT FOUR PLACE ----------	1	
	0700105-202	PANEL ASSEMBLY FOUR PLACE ONLY ----------	1	
-20	0700105-418	PANEL ASSEMBLY USE WHEN OXYGEN SYSTEM IS INSTALLED ------	1	
		ATTACHING PARTS		
	49265F938	STUD UC ----------	18	
	49265F938	STUD UC USE WHEN OXYGEN SYSTEM IS INSTALLED ---------	19	
		---*---		
-21	0700105-419	COVER ASSEMBLY USE WHEN OXYGEN SYSTEM IS INSTALLED ----	1	
-22	0700105-265	FAIRING-LH STA 108.0 ----------	1	
-23	0513013-12	BAGGAGE SHELF ----------	1	
		ATTACHING PARTS		
	AN3-3A	BOLT ----------	4	
	S1021Z4-4	SCREW ----------	10	
		---*---		
-24	0700105-463	CHANNEL-UPHOLSTERY LH ----------	1	
-25	0700105-464	CHANNEL-UPHOLSTERY RH ----------	1	
-26	0700105-407	WINDLACE ASSEMBLY-UPHOLSTERY ----------	2	
		ATTACHING PARTS		
	S1021Z4-4	SCREW ----------	44	
		---*---		
-27	0500103-133	HOLDER-PLACARD ----------	1	
-28	S1273-1	HANDLE-BAGGAGE DOOR PULL ----------	1	
		ATTACHING PARTS		
	AN515-8R8	SCREW ----------	2	
		---*---		
	B1 *	SOUNDPROOFING-FIBERGLASS MAT 1 IN.THICK BULK ITEM ---	AR	
-29	1200084-6	FAIRING-REAR DOORPOST RH ----------	1	
-30	1200084-7	FAIRING-REAR DOORPOST LH ----------	1	

NOTE. * GIVE DIMENSIONS WHEN ORDERING

A---SERIAL 18051184 THRU 18051312
B---SERIAL 18051184 THRU 18051208
C---SERIAL 18051209 THRU 18051312

Front Seat

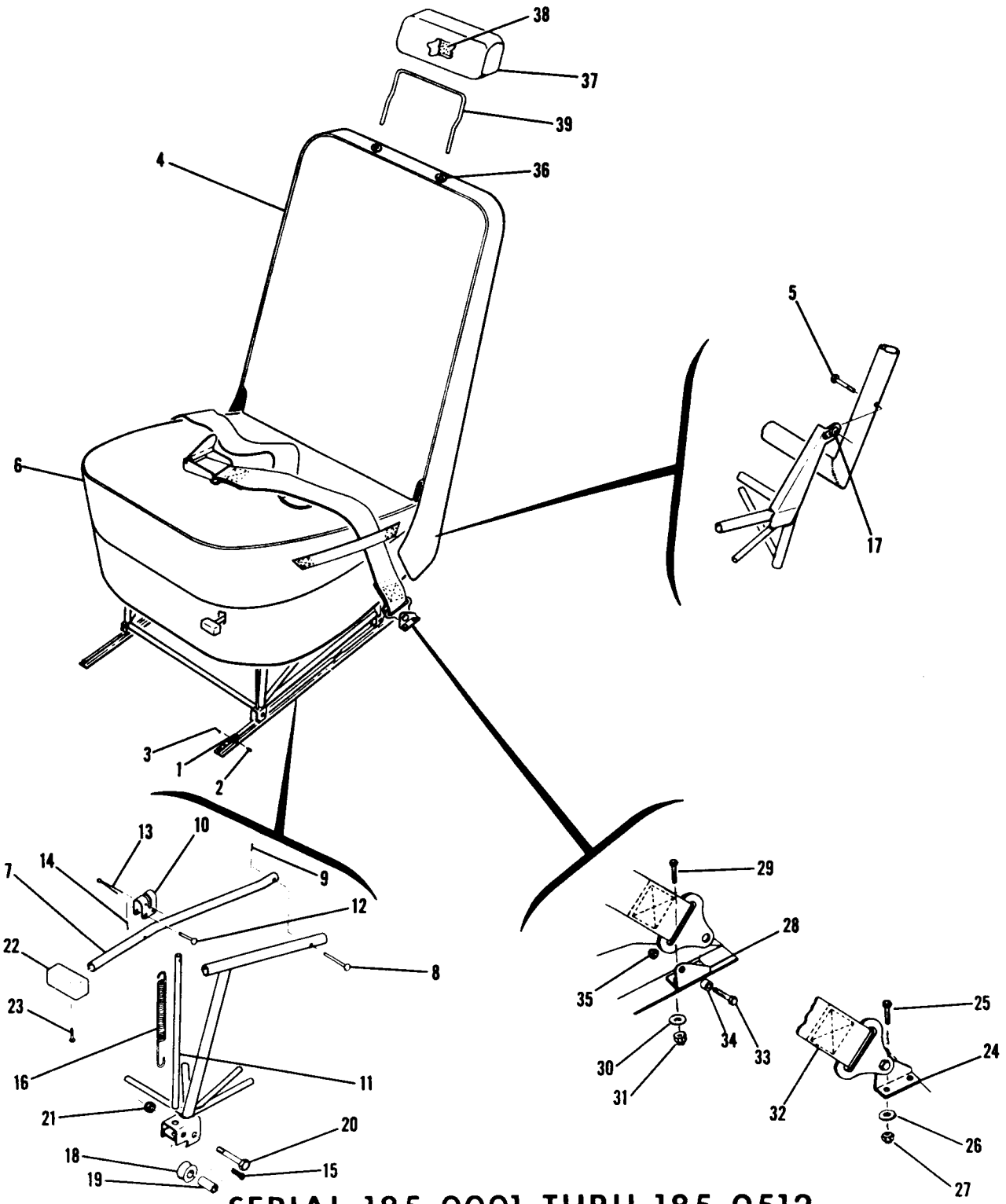

SERIAL 185-0001 THRU 185-0512

Figure 59. Front Seat Installation

FIGURE AND INDEX NO.	PART NUMBER	DESCRIPTION 1 2 3 4 5 6 7	UNITS PER ASSY	USABLE ON CODE
59 -		SEAT INSTALLATION-FRONT	NP	A
	0700105-408	SEAT ASSEMBLY-FRONT UTILITY UPHOLSTERY	2	
	0700105-369	SEAT ASSEMBLY-FRONT DELUXE UPHOLSTERY	2	
		ATTACHING PARTS	2	
- 1	0713074-1	STOP-SEAT	2	
- 2	MS20392-1C21	PIN-CLEVIS	2	
- 3	MS24665-151	PIN-COTTER		
		---*---		
- 4	0700105-413	BACK ASSEMBLY-SEAT UPHOLSTERED UTILITY UPHOLSTERY	1	
	0700105-361	BACK ASSEMBLY-SEAT UPHOLSTERY DELUXE UPHOLSTERY	1	
		ATTACHING PARTS	2	
- 5	AN4-13A	BOLT		
		---*---		
	0700105-415	COVER ASSEMBLY-SEAT BACK UTILITY UPHOLSTERY	1	
	0700105-20	COVER ASSEMBLY-SEAT BACK DELUXE UPHOLSTERY	1	
- 6	0700105-414	CUSHION ASSEMBLY-SEAT UPHOLSTERED UTILITY UPHOLSTERY	1	
	0700105-359	CUSHION ASSEMBLY-SEAT UPHOLSTERED DELUXE UPHOLSTERY	1	
	0700105-416	COVER ASSEMBLY-SEAT CUSHION UTILITY UPHOLSTERY	1	
	0700105-21	COVER ASSEMBLY-SEAT CUSHION DELUXE UPHOLSTERY	1	
- 7	0710316-1	TUBE-SEAT ADJUSTMENT	1	
		ATTACHING PARTS	1	
- 8	MS20392-2C31	PIN-FLATHEAD	1	
- 9	MS24665-134	PIN-COTTER		
		---*---	1	
-10	0311644	CLEVIS	1	
-11	0710304-2	TUBE-SEAT LOCK		
		ATTACHING PARTS	1	
-12	MS20392-1C15	PIN-FLATHEAD	1	
-13	MS24665-285	PIN-COTTER	1	
-14	MS24665-134	PIN-COTTER	1	
-15	MS24665-132	PIN-COTTER		
		---*---	1	
-16	0310196-2	SPRING-SEAT HANDLE	2	
-17	NAS682A4	NUT	4	
-18	0311310	ROLLER-SEAT		
		ATTACHING PARTS	1	
-19	0311586	BUSHING	1	
-20	AN3-11A	BOLT	1	
-21	MS21044N3	NUT		
		---*---	1	
-22	0700106-1	KNOB-SEAT ADJUSTMENT		
		ATTACHING PARTS	1	
-23	S1021Z6-8	SCREW		
		---*---	2	
-24	0511301-19	FITTING-SEAT BELT LH OUTBOARD & RH INBOARD		
		WHEN EXHAUSTED USE 0510205-5	2	
	0510205-5	FITTING-SEAT BELT LH OUTBOARD & RH INBOARD		
		ATTACHING PARTS	2	
-25	AN3-5A	BOLT	1	
-26	AN970-3	WASHER UNDER FOWARD NUT ONLY	2	
-27	MS21044N3	NUT		
		---*---	2	
-28	0511301-18	FITTING-SEAT BELT LH INBOARD & RH OUTBOARD		
		WHEN EXHAUSTED USE 0510205-6	2	
	0510205-6	FITTING-SEAT BELT LH INBOARD & RH OUTBOARD		
		ATTACHING PARTS	2	
-29	AN3-5A	BOLT	1	
-30	AN970-3	WASHER UNDER FOWARD NUT ONLY	2	
-31	MS21044N3	NUT		
		---*---	2	B
-32	S1060-3	BELT ASSEMBLY-SEAT BLACK	1	C
	S1060-15	BELT ASSEMBLY-SEAT BEIGE		
		ATTACHING PARTS	2	
-33	AN4-6A	BOLT	2	
-34	NAS43HT4-20	SPACER	2	
-35	MS21044N3	NUT		
		---*---	4	
-36	0700320-1	RETAINER-FRONT SEAT HEADREST	2	
	0800023-5	HEADREST ASSEMBLY-FRONT SEAT	1	
-37	0800023-3	COVER ASSEMBLY-HEADREST	1	
-38	1200134-1	CUSHION-FOAM FILLER	1	
-39	1200108-1	FRAME-FRONT SEAT HEADREST		
		A---SERIAL 185-0001 THRU 185-0512		
		B---SERIAL 185-0001 THRU 185-0237		
		C---SERIAL 185-0238 THRU 185-0512		

Front Seat (Cont)

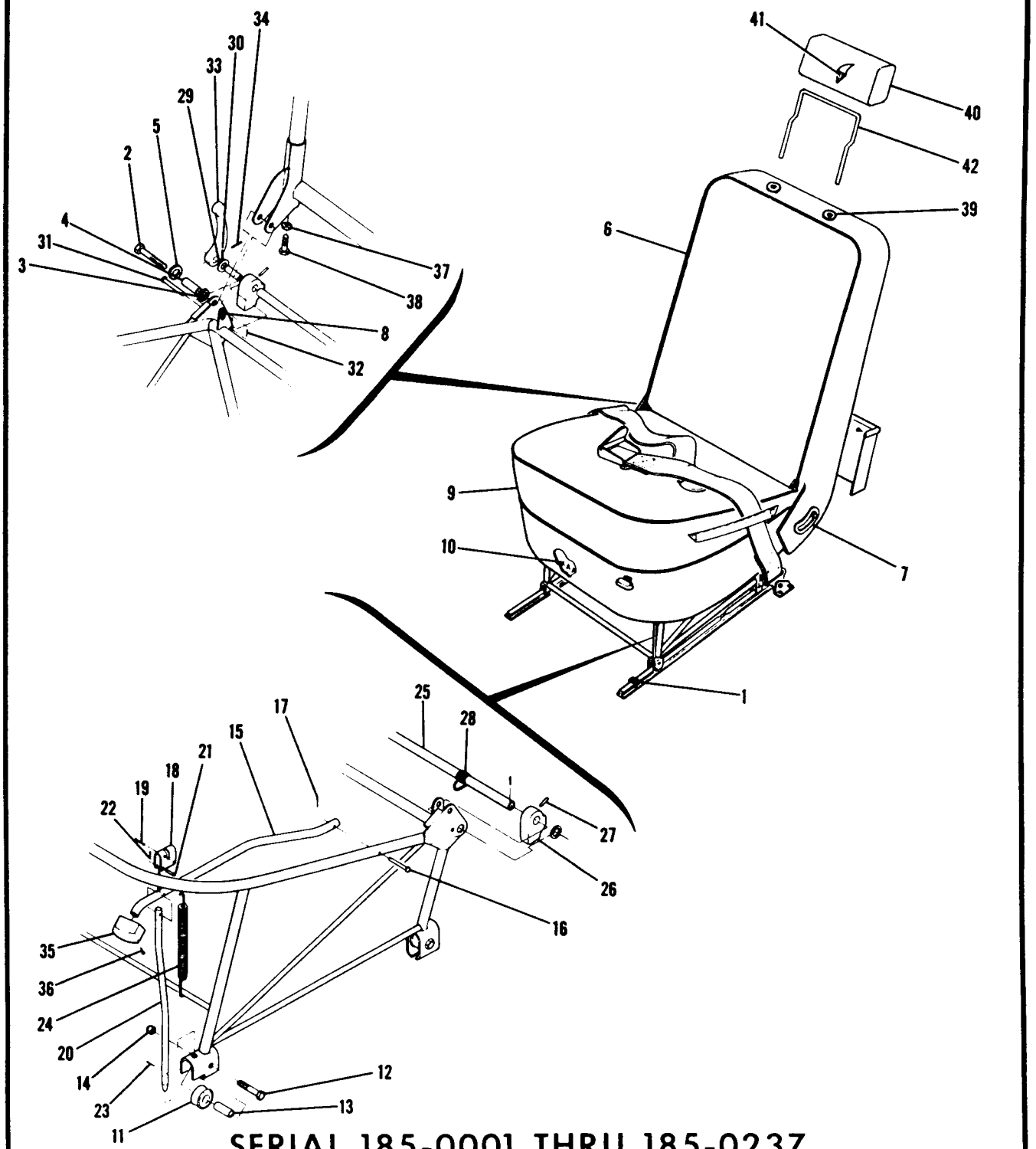

SERIAL 185-0001 THRU 185-0237

Figure 59A. Reclining Front Seat

FIGURE AND INDEX NO.	PART NUMBER	DESCRIPTION 1 2 3 4 5 6 7	UNITS PER ASSY	USABLE ON CODE
		SEAT INSTALLATION-RECLINING BACK FRONT	NP	A
59A-		SEAT ASSEMBLY-RECLINING BACK FRONT LH DELUXE	1	
	0700105-385	SEAT ASSEMBLY-RECLINING BACK FRONT RH DELUXE	1	
	0700105-390	SEAT ASSEMBLY-RECLINING BACK FRONT LH UTILITY	1	
	0700105-427	SEAT ASSEMBLY-RECLINING BACK FRONT RH UTILITY	1	
	0700105-432	ATTACHING PARTS		
- 1	0713074-1	STOP-SEAT	2	
	MS20392-1C21	PIN-CLEVIS	2	
	MS24665-151	PIN-COTTER	2	
		---*---		
	0700105-399	BACK ASSEMBLY-SEAT UPHOLSTERED LH DELUXE	1	
	0700105-398	BACK ASSEMBLY-SEAT UPHOLSTERED RH DELUXE	1	
	0700105-452	BACK ASSEMBLY-SEAT UPHOLSTERED LH UTILITY	1	
	0700105-451	BACK ASSEMBLY-SEAT UPHOLSTERED RH UTILITY	1	
		ATTACHING PARTS		
- 2	AN24-29A	BOLT	2	
- 3	AN960-416L	WASHER	2	
- 4	0710313-2	BUSHING	2	
- 5	S1074-1	WASHER	2	
		---*---		
- 6	0700105-20	COVER ASSEMBLY-SEAT BACK DELUXE	1	
	0700105-430	COVER ASSEMBLY-SEAT BACK	1	
- 7	0700105-397	PLATE ASSEMBLY-RECLINING LEVER TRIM	1	
	0700105-425	PANEL ASSEMBLY-REAR	1	
	0700105-400	CUSHION ASSEMBLY-SEAT UPHOLSTERED DELUXE	1	
	0700105-453	CUSHION ASSEMBLY-SEAT UPHOLSTERED UTILITY	1	
- 8	NAS696A4	NUTPLATE	2	
- 9	0700105-2	COVER ASSEMBLY-SEAT CUSHION DELUXE	1	
	0700105-431	COVER ASSEMBLY-SEAT CUSHION UTILITY	1	
-10	0700104-89	SKIRT-SEAT CUSHION	1	
-11	0311310	ROLLER-SEAT	4	
		ATTACHING PARTS		
-12	AN3-11A	BOLT	1	
-13	0311586	BUSHING	1	
-14	MS21044N3	NUT	1	
		---*---		
-15	0710316-1	HANDLE	1	
		ATTACHING PARTS		
-16	MS20392-2C31	PIN-FLATHEAD	1	
-17	MS24665-134	PIN-COTTER	1	
		---*---		
-18	0311644	CLEVIS	1	
		ATTACHING PARTS		
-19	MS24665-285	PIN-COTTER	1	
		---*---		
-20	0710304-2	PIN-SEAT ADJUSTMENT LATCH	1	
		ATTACHING PARTS		
-21	MS20392-1C15	PIN-FLATHEAD	1	
-22	MS24665-134	PIN-COTTER	1	
-23	MS24665-132	PIN-COTTER	1	
		---*---		
-24	0310196-15	SPRING-SEAT ADJUSTMENT LATCH	1	
-25	0710302-1	TUBE-RECLINER	1	
-26	0710317-1	CAM-RECLINER	2	
		ATTACHING PARTS		
-27	NAS561C3-12	ROLLPIN	1	
		---*---		
-28	0710308-1	SPRING-RECLINER CAM RETURN	1	
-29	AN960C616L	WASHER	2	
		ATTACHING PARTS		
-30	NAS561C2-10	ROLLPIN	2	
		---*---		

CONTINUED ON NEXT PAGE

FIGURE AND INDEX NO.	PART NUMBER	DESCRIPTION 1 2 3 4 5 6 7	UNITS PER ASSY	USABLE ON CODE
59A-31	MS20392-1C37	PIN-FLATHEAD	2	
		ATTACHING PARTS		
-32	MS24665-132	PIN-COTTER	1	
		---◆---		
-33	0710312-2	HANDLE-RECLINING SEAT BACK ADJUSTMENT	1	
		ATTACHING PARTS		
-34	NAS561C2-10	ROLLPIN	1	
		---◆---		
-35	0700113-1	KNOB-SEAT ADJUSTMENT HANDLE	1	
		ATTACHING PARTS		
-36	S1021Z6-8	SCREW	1	
		---◆---		
-37	0710306-1	PLUG-STOP	2	
		ATTACHING PARTS		
-38	NAS603-16	SCREW-STOP	2	
	AN345-10	NUT	2	
	AN960D10	WASHER	AR	
		---◆---		
-39	0700320-1	RETAINER-FRONT SEAT HEADREST	4	
	0800023-5	HEADREST ASSEMBLY-FRONT SEAT	2	
-40	0800023-3	COVER ASSEMBLY-HEADREST	1	
-41	1200134-1	CUSHION-FOAM FILLER	1	
-42	1200108-1	FRAME ASSEMBLY	1	
		A---SERIAL 185-0001 THRU 185-0237		

Front Seat

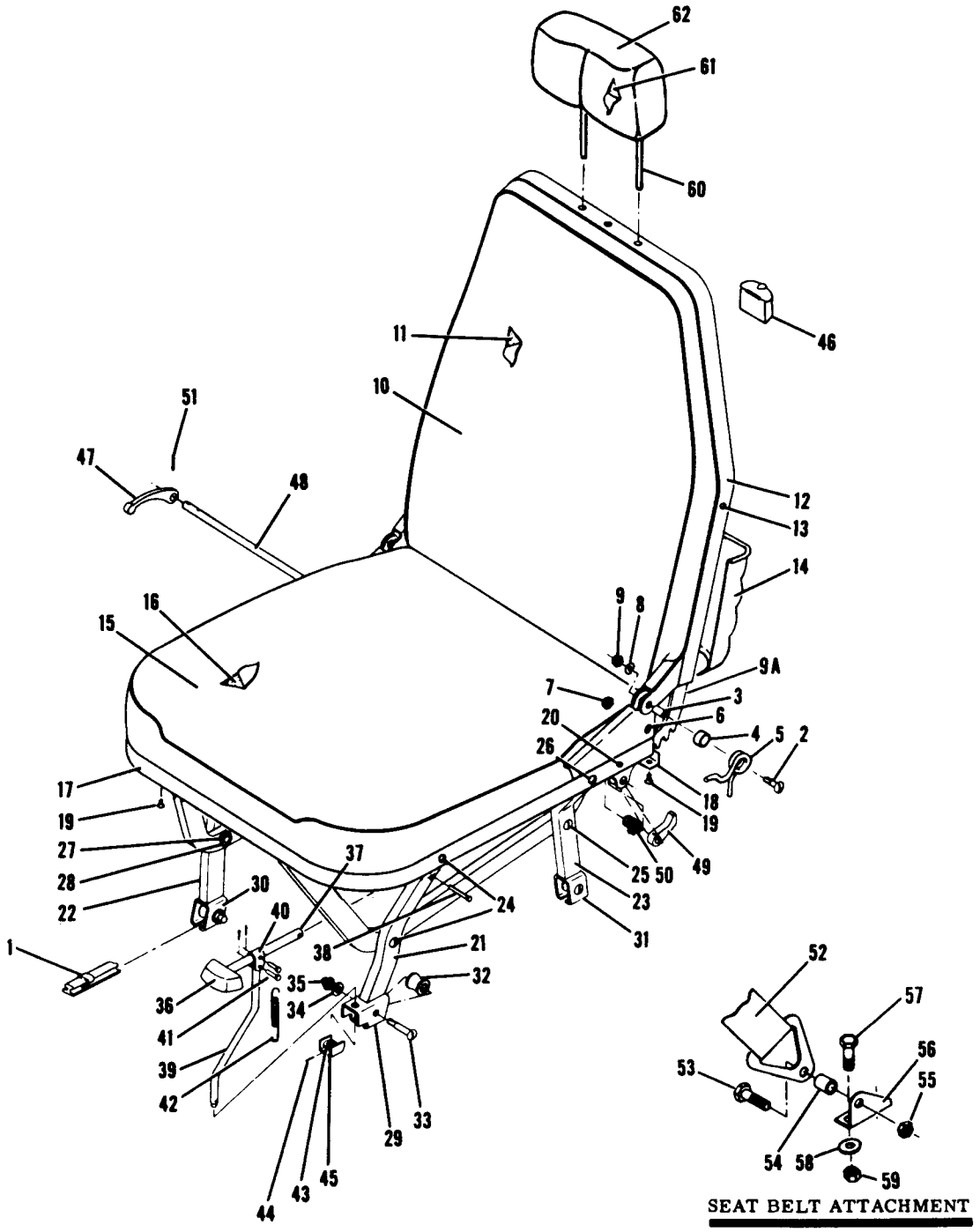

SERIAL 18051184 THRU 18051875
SERIAL 185-0513 THRU 185-1300

Figure 60. Front Seat Installation

FIGURE AND INDEX NO.	PART NUMBER	DESCRIPTION 1 2 3 4 5 6 7	UNITS PER ASSY	USABLE ON CODE
60 -		SEAT INSTALLATION-FRONT	NP	A
	0700114-40 #	SEAT ASSEMBLY-FRONT UTILITY	2	
	0700114-43 #	SEAT ASSEMBLY-FRONT DELUXE	2	B
		ATTACHING PARTS		
- 1	0713074-1	STOP-SEAT	2	
	MS20392-1C21	PIN	2	
	MS24665-151	PIN-COTTER	2	
		---*---		
	0700114-200 #	BACK ASSEMBLY-UPHOLSTERED SEAT UTILITY	1	
	0700114-201 #	BACK ASSEMBLY-UPHOLSTERED SEAT DELUXE	1	B
		ATTACHING PARTS		
- 2	AN23-16	BOLT	2	
- 3	1414104-4	BUSHING	2	
- 4	0711668-1	BUSHING	2	
- 5	0711667-1	SPRING	2	
- 6	AN507-832R14	SCREW	2	
- 7	NAS679A08	NUT	2	
- 8	AN960-10L	WASHER	2	
- 9	S1914-8	NUT	2	
		---*---		
- 9A	1414230-1	CAM-SEAT BACK ADJUST	1	
-10	0700114-44 #	COVER-SEAT BACK UTILITY	1	B
	0700114-46 #	COVER-SEAT BACK DELUXE	1	
-11	1414100-9	CUSHION-SEAT BACK	1	
-12	1414110-1 ¤	TRIM-SEAT BACK		
		ATTACHING PARTS	3	
-13	S1021Z8-6C	SCREW		
		---*---	1	
-14	1414110-3 ¤	POCKET ASSEMBLY-MAGAZINE	1	
	0700114-202 #	BOTTOM ASSEMBLY-UPHOLSTERED SEAT UTILITY	1	B
	0700114-203 #	BOTTOM ASSEMBLY-UPHOLSTERED SEAT DELUXE	1	
-15	0700114-42 #	COVER-SEAT BOTTOM UTILITY	1	B
	0700114-45 #	COVER-SEAT BOTTOM DELUXE	1	
-16	1414100-8	CUSHION-SEAT BOTTOM	1	E
-17	1414217-2	RETAINER-SEAT BOTTOM	1	F
	1414217-7	RETAINER-SEAT BOTTOM	1	
-18	1414217-3	RETAINER-SEAT BOTTOM	14	
-19	S1021Z6-4	SCREW	2	
-20	AN23-15A	BOLT LH SIDE ONLY	1	
	AN23-19A	BOLT RH SIDE ONLY	1	
	NAS43HT3-16	SPACER RH SIDE ONLY	2	
	MS21044N3	NUT	1	
-21	1414103-2	LEG ASSEMBLY-FORWARD LH	1	
-22	1414103-12	LEG ASSEMBLY-FORWARD RH	2	
-23	1414103-6	LEG-SEAT AFT		
		ATTACHING PARTS	2	
-24	AN24-13	BOLT-FORWARD LEG	1	
-25	AN24-13	BOLT-AFT LEG	1	
-26	AN24-16	BOLT-AFT LEG	2	
	AN936A416	WASHER	2	
-27	AN936A616	WASHER	2	
-28	1414112-1	NUT		
		---*---	1	
-29	1414104-39	HOUSING-SEAT ROLLER FORWARD LH	1	
-30	1414104-40	HOUSING-SEAT ROLLER FORWARD RH	1	
-31	1414104-41	HOUSING-SEAT ROLLER AFT LH	1	
	1414104-42	HOUSING-SEAT ROLLER AFT RH	4	
-32	1414100-212	SEAT ROLLER KIT		
		ATTACHING PARTS	1	
-33	AN23-19A	BOLT	1	
-34	AN960-10L	WASHER	1	
-35	S1914-8	NUT		
		---*---	1	
-36	0700113-1	KNOB FORE & AFT SEAT ADJUSTMENT	1	
	S1021Z6-8	SCREW	1	
-37	1414104-45	ARM-SEAT ADJUSTMENT		
		ATTACHING PARTS	1	
-38	MS20392-2C47	PIN	1	
	MS24665-132	PIN-COTTER		
		---*---		

CONTINUED ON NEXT PAGE

FIGURE AND INDEX NO.	PART NUMBER	DESCRIPTION 1 2 3 4 5 6 7	UNITS PER ASSY	USABLE ON CODE
60 -39	1414104-46	PIN-SEAT ADJUSTMENT	1	
-40	1414104-56	CLAMP	1	
-41	MS20392-1C15	PIN	2	
	MS24665-132	PIN-COTTER	2	
-42	1414116-1	SPRING-SEAT ADJUSTMENT	1	
-43	AN960C416L	WASHER	1	
-44	NAS561-2-12	PIN	1	
-45	1414104-8	BRACKET-SEAT ADJUSTMENT	1	
-46	S1957-2	ASH RECEIVER-SEAT BACK	1	
-47	0710312-2	HANDLE-RECLINING ADJUSTMENT	1	
-48	1414104-1	TUBE-SEAT ADJUSTMENT TORQUE	1	
-49	1414231-4	PAWL-SEAT ADJUSTMENT MUST BE ORDERED IN PAIRS ONLY	2	
-50	1414107-1	SPRING-SEAT ADJUSTMENT	1	
-51	NAS561C3-10	PIN	3	
-52	S1060-15	BELT ASSEMBLY-FRONT SEAT BEIGE	2	E
	S1618B3	BELT ASSEMBLY-FRONT SEAT BLACK	2	G
	S1618D3	BELT ASSEMBLY-FRONT SEAT TAN	2	H
		ATTACHING PARTS		
-53	AN4-5A	BOLT	2	
-54	NAS43HT4-20	SPACER	2	
-55	NAS679A4	NUT	2	
		---*---		
-56	0511301-18	FITTING-SEAT BELT INBOARD LH & OUTBOARD RH	2	
		WHEN EXHAUSTED USE 0510205-6		
	0510205-6	FITTING-SEAT BELT INBOARD LH & OUTBOARD RH	2	
	0511301-19	FITTING-SEAT BELT OUTBOARD LH & INBOARD RH	2	
		WHEN EXHAUSTED USE 0510205-5		
	0510205-5	FITTING-SEAT BELT OUTBOARD LH & INBOARD RH	2	
		ATTACHING PARTS		
-57	AN3-4A	BOLT INBOARD FITTINGS ONLY	2	
	AN3-5A	BOLT OUTBOARD FITTINGS ONLY	2	
-58	AN970-3	WASHER UNDER FORWARD NUT ONLY	1	
-59	MS21044N3	NUT	2	
		---*---		
	1414252-1 #	HEADREST ASSEMBLY	2	
-60	1414252-2	FRAME ASSEMBLY-HEADREST	1	
-61	1414252-7	CUSHION-HEADREST	1	
-62	1414252-6 #	COVER-HEADREST	1	

NOTE. *THIS PART NUMBER MUST HAVE A SECOND DASH NUMBER ADDED TO DENOTE COLOR. REFER TO HOW TO ORDER UPHOLSTERED PARTS-PAGE XII.

NOTE. #THIS PART NUMBER MUST HAVE A SECOND DASH NUMBER ADDED TO DENOTE COLOR. REFER TO HOW TO ORDER INTERIOR PARTS-PAGE XIII.

A---SERIAL 185-0513 THRU 185-1300
SERIAL 18051184 THRU 18051875
B---SERIAL 185-0654 THRU 185-1300
SERIAL 18051184 THRU 18051875
E---SERIAL 185-0513 THRU 185-0776
SERIAL 18051184 THRU 18051445
F---SERIAL 185-0777 THRU 185-1300
SERIAL 18051446 THRU 18051875
G---SERIAL 185-0777 THRU 185-0967
SERIAL 18051446 THRU 18051607
H---SERIAL 185-0968 THRU 185-1300
SERIAL 18051608 THRU 18051875

FIGURE AND INDEX NO.	PART NUMBER		DESCRIPTION 1 2 3 4 5 6 7	UNITS PER ASSY	USABLE ON CODE
61 -			SEAT INSTALLATION-FRONT	NP	A
	0700114-63	#	SEAT ASSEMBLY-FRONT UTILITY	2	B
	0700114-64	#	SEAT ASSEMBLY-FRONT DELUXE	2	B
	1200605-34	#	SEAT ASSEMBLY-FRONT	2	C
			ATTACHING PARTS		
- 1	0713074-1		STOP-SEAT	2	
	MS20392-1C21		PIN	2	
	MS24665-151		PIN-COTTER	2	
			---*---		
	0700114-206	#	BACK ASSEMBLY-UPHOLSTERED SEAT UTILITY	1	B
	0700114-207	#	BACK ASSEMBLY-UPHOLSTERED SEAT DELUXE	1	B
	1200605-222	#	BACK ASSEMBLY-UPHOLSTERED SEAT	1	C
			ATTACHING PARTS		
- 2	AN23-19A		BOLT	2	
- 3	NAS43HT3-12		SPACER	2	
- 4	1414104-4		BUSHING	2	
- 5	0711668-1		BUSHING	2	
- 6	0711667-1		SPRING	2	
- 7	AN507-832R14		SCREW	2	
- 8	NAS679A08		NUT	2	
- 9	AN960-10L		WASHER	2	
-10	S1914-8		NUT	2	
			---*---		
-11	1414230-1		CAM-SEAT BACK ADJUST	1	B
-12	0700114-44	#	COVER-SEAT BACK UTILITY	1	B
	0700114-46	#	COVER-SEAT BACK DELUXE	1	C
	1200605-12	#	COVER-SEAT BACK	1	B
-13	1414100-9		CUSHION-SEAT BACK	1	C
	1200605-33		CUSHION-SEAT BACK	1	B
-14	0715001-1	¤	TRIM ASSEMBLY-SEAT BACK	1	C
	1215034-200	#	TRIM ASSEMBLY-SEAT BACK		
			ATTACHING PARTS	3	B
-15	S1021Z8-6C		SCREW		
			---*---	1	B
-16	1715023-3	¤	POCKET ASSEMBLY-MAGAZINE	1	B
	1414045-2		SPRING	1	B
	0700114-204	#	BOTTOM ASSEMBLY-UPHOLSTERED SEAT UTILITY	1	B
	0700114-205	#	BOTTOM ASSEMBLY-UPHOLSTERED SEAT DELUXE	1	C
	1200605-221	#	BOTTOM ASSEMBLY-UPHOLSTERED SEAT	1	B
-17	0700114-42	#	COVER-SEAT BOTTOM UTILITY	1	B
	0700114-45	#	COVER-SEAT BOTTOM DELUXE	1	C
	1200605-11	#	COVER-SEAT BOTTOM	1	
-18	1414100-8		CUSHION-SEAT BOTTOM	1	
-19	1414217-7		RETAINER-SEAT BOTTOM	1	
-20	1414217-3		RETAINER-SEAT BOTTOM	14	
-21	S1021Z6-4		SCREW	2	
-22	AN23-15A		BOLT-SEAT BACK STOP	2	
	MS21044N3		NUT	1	
-23	1414103-2		LEG ASSEMBLY-FORWARD LH	1	
-24	1414103-45		LEG ASSEMBLY-FORWARD RH	2	
-25	1414103-6		LEG-AFT		
			ATTACHING PARTS	2	
-26	AN24-13A		BOLT-FORWARD LEG	1	
-27	AN24-13A		BOLT-AFT LEG	1	
-28	AN24-16A		BOLT-AFT LEG	2	
	AN936A416		WASHER	2	
-29	AN936A616		WASHER	2	
-30	1414112-1		NUT		
			---*---	1	
-31	1414104-39		HOUSING-SEAT ROLLER FWD LH	1	
-32	1414104-40		HOUSING-SEAT ROLLER FWD RH	1	
-33	1414104-41		HOUSING-SEAT ROLLER AFT LH	1	
	1414104-42		HOUSING-SEAT ROLLER AFT RH	4	
-34	1414100-212		KIT-SEAT ROLLER		
			ATTACHING PARTS	1	
-35	AN23-19A		BOLT	1	
-36	AN960-10L		WASHER	1	
-37	S1914-8		NUT		
			---*---		

CONTINUED ON NEXT PAGE

Front Seat (Cont)

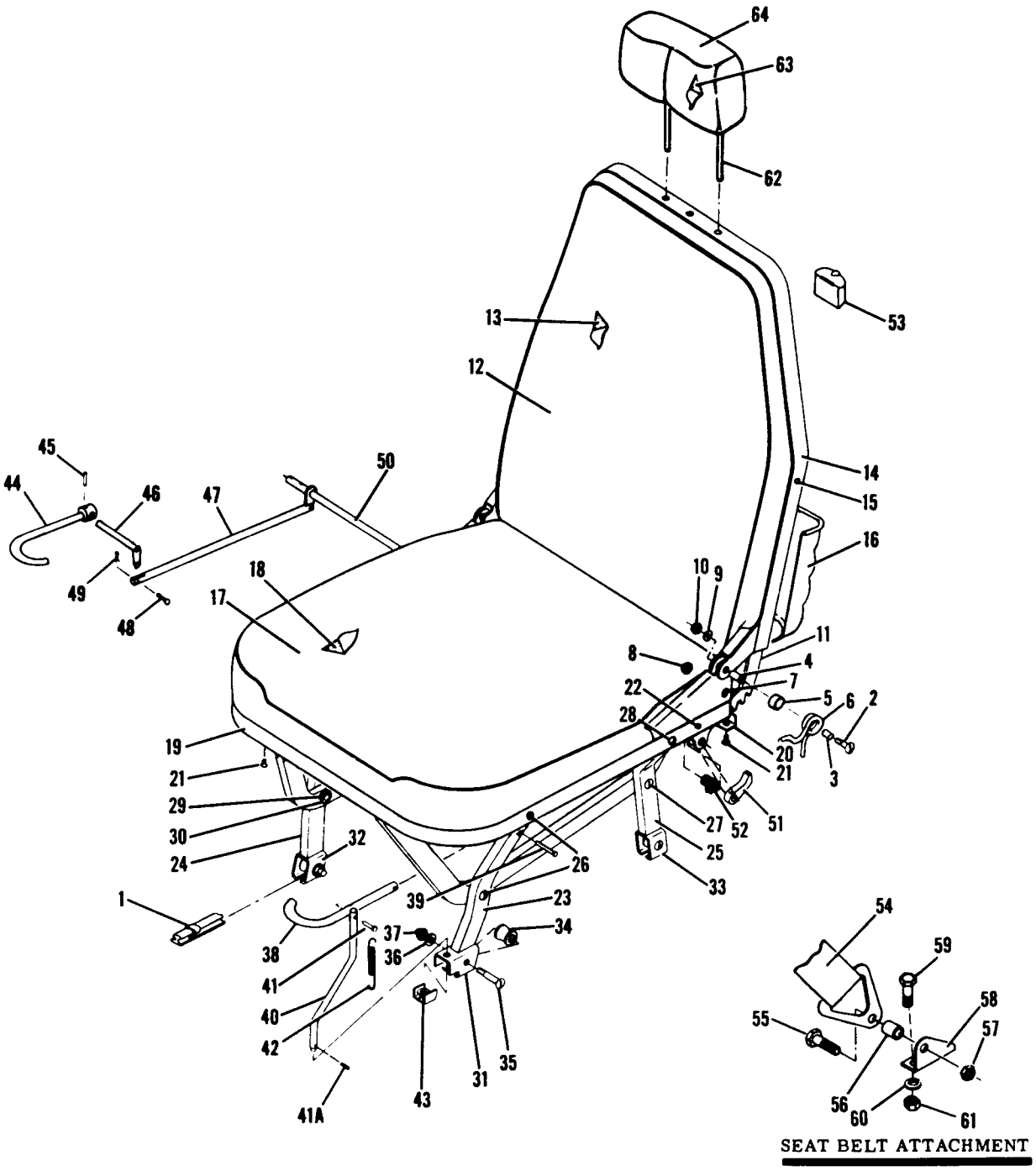

SERIAL 185-1301 THRU 185-1599
SERIAL 18051876 THRU 18052103

Figure 61. Front Seat Installation

FIGURE AND INDEX NO.	PART NUMBER	DESCRIPTION 1 2 3 4 5 6 7	UNITS PER ASSY	USABLE ON CODE
61 -38	1200504-1	HANDLE-SEAT ADJUSTMENT	1	
		ATTACHING PARTS	1	
-39	MS20392-2C34	PIN	1	
	MS24665-132	PIN-COTTER		
		---*---	1	
-40	1200505-1	PIN-SEAT ADJUSTMENT		
		ATTACHING PARTS	1	
-41	MS20392-1C21	PIN	1	
	MS24665-132	PIN-COTTER	1	
-41A	NAS561-2-12	ROLL PIN		
		---*---	1	
-42	1414116-1	SPRING-SEAT ADJUSTMENT	1	
-43	1414104-8	BRACKET-SEAT ADJUSTMENT	1	
-44	1200504-3	HANDLE ASSEMBLY-RECLINING ADJUSTMENT		
		ATTACHING PARTS	1	
-45	NAS561-3-8	ROLL PIN		
		---*---	1	
-46	1200503-1	ARM ASSEMBLY-SEAT BACK ADJUST	1	
-47	1514223-28	LINK-SEAT BACK ADJUST		
		ATTACHING PARTS	2	
-48	MS20392-1C9	PIN	2	
-49	MS24665-132	PIN-COTTER		
		---*---	1	
-50	1414223-34	TUBE ASSEMBLY-TORQUE	2	
-51	1414231-4	PAWL-SEAT BACK ADJUST REPLACE IN PAIRS ONLY		
		ATTACHING PARTS	1	
	NAS561C3-10	ROLL PIN		
		---*---	1	
-52	1414107-1	SPRING-SEAT ADJUSTMENT	1	
-53	S1957-2	ASH RECEIVER-SEAT BACK	1	C
	1A1001	RETAINER-ASH RECEIVER GDR		
		ATTACHING PARTS	2	C
	S1021Z6-8	SCREW	2	C
	NAS395-5	NUT		
		---*---	2	
-54	S1746D2	BELT ASSEMBLY-FRONT SEAT TAN		
		ATTACHING PARTS	2	
-55	AN4-5A	BOLT	2	
-56	NAS43HT4-20	SPACER	2	
-57	NAS679A4	NUT		
		---*---	2	D
-58	0511301-18	FITTING-SEAT BELT INBOARD LH & OUTBOARD RH		
		WHEN EXHAUSTED USE 0510205-6	2	E
	0510205-6	FITTING-SEAT BELT INBOARD LH & OUTBOARD RH	2	D
	0511301-19	FITTING-SEAT BELT OUTBOARD LH & INBOARD RH		
		WHEN EXHAUSTED USE 0510205-51	2	E
	0510205-5	FITTING-SEAT BELT OUTBOARD LH & INBOARD RH		
		ATTACHING PARTS	2	
-59	AN3-4A	BOLT INBOARD FITTINGS ONLY	2	
	AN3-5A	BOLT OUTBOARD FITTINGS ONLY	1	
-60	AN970-3	WASHER UNDER FORWARD NUT ONLY	2	
-61	MS21044N3	NUT		
		---*---	2	
	1714040-1 *	HEADREST ASSEMBLY	1	
-62	1414252-2	FRAME ASSEMBLY-HEADREST	1	
-63	1714035-1	CUSHION-HEADREST	1	
-64	1714040-2 *	COVER-HEADREST		

NOTE. *THIS PART NUMBER MUST HAVE A SECOND DASH NUMBER ADDED TO DENOTE COLOR. REFER TO HOW TO ORDER UPHOLSTERED PARTS-PAGE XII.

NOTE. *THIS PART NUMBER MUST HAVE A SECOND DASH NUMBER ADDED TO DENOTE COLOR. REFER TO HOW TO ORDER INTERIOR PARTS-PAGE XIII.

A---SERIAL 185-1301 THRU 185-1599
SERIAL 18051876 THRU 18052103
B---SERIAL 185-1301 THRU 185-1447
SERIAL 18051876 THRU 18051993
C---SERIAL 185-1448 THRU 185-1599
SERIAL 18051994 THRU 18052103
D---SERIAL 185-1301 THRU 185-1563
SERIAL 18051876 THRU 18052085
E---SERIAL 185-1564 THRU 185-1599
SERIAL 18052086 THRU 18052103

Front Seat (Cont)

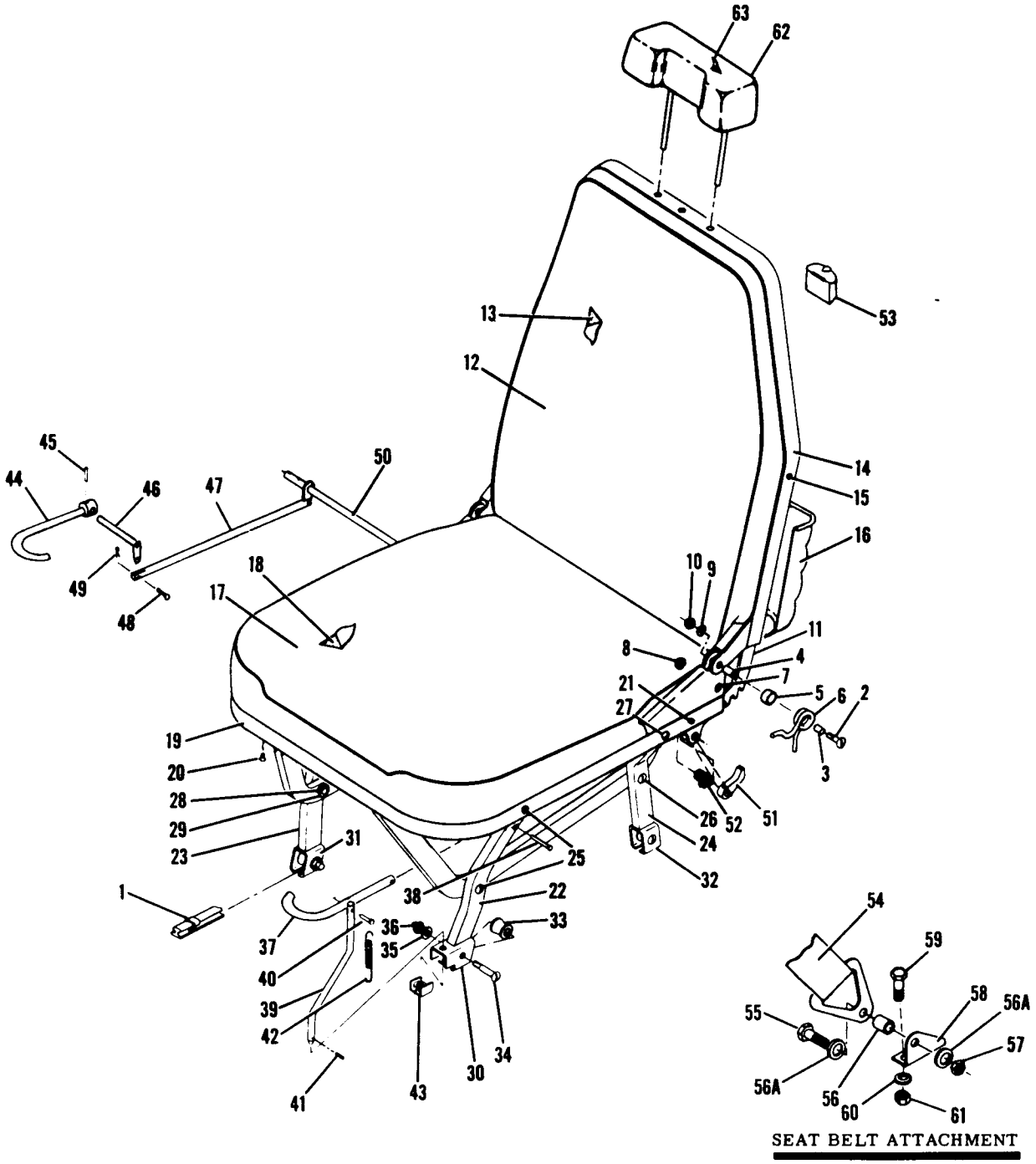

SERIAL 18501600 THRU 18502310
SERIAL 18052104 THRU 18052384

Figure 61A. Front Seat Installation

FIGURE AND INDEX NO.	PART NUMBER	DESCRIPTION 1 2 3 4 5 6 7	UNITS PER ASSY	USABLE ON CODE
61A-		SEAT INSTALLATION-FRONT	NP	A
	1200605-35 #	SEAT ASSEMBLY-FRONT	2	B
	1200605-40 #	SEAT ASSEMBLY-FRONT	2	C
		ATTACHING PARTS		
- 1	0713074-1	STOP-SEAT	2	
	MS20392-1C21	PIN	2	
	MS24665-151	PIN-COTTER	2	
		---*---		
	1200605-223 #	BACK ASSEMBLY-UPHOLSTERED SEAT	1	B
		BACK ASSEMBLY-UPHOLSTERED SEAT	NP	C
		ATTACHING PARTS		
- 2	AN23-19A	BOLT	2	
- 3	NAS43HT3-12	SPACER	2	
- 4	1414104-4	BUSHING	2	
- 5	0711668-1	BUSHING	2	
- 6	0711667-1	SPRING	2	
- 7	AN507-832R14	SCREW	2	
- 8	NAS679A08	NUT	2	
- 9	AN960-10L	WASHER	2	
-10	S1914-8	NUT		
		---*---	2	
-11	1414230-1	CAM-SEAT BACK ADJUST	1	
-12	1200605-12 #	COVER-SEAT BACK	1	
-13	1200605-33	CUSHION-SEAT BACK	1	B
-14	0514055-1 ¤	TRIM ASSEMBLY-SEAT BACK	1	C
	0514055-11 ¤	TRIM ASSEMBLY-SEAT BACK		
		ATTACHING PARTS	3	
-15	S1021Z8-6C	SCREW		
		---*---	1	
-16	0514055-3 ¤	POCKET ASSEMBLY-MAGAZINE	1	
	1200605-224 #	BOTTOM ASSEMBLY-UPHOLSTERED SEAT	1	
-17	1200605-11 #	COVER-SEAT BOTTOM	1	
-18	1414100-8	CUSHION-SEAT BOTTOM	1	
-19	0514058-1	RETAINER-SEAT BOTTOM	5	
-20	S1021A4-6	SCREW	2	
-21	AN23-15A	BOLT-SEAT BACK STOP	2	
	MS21044N3	NUT	1	
-22	1414103-2	LEG ASSEMBLY-FORWARD LH	1	
-23	1414103-45	LEG ASSEMBLY-FORWARD RH	2	
-24	1414103-6	LEG-AFT		
		ATTACHING PARTS	2	
-25	AN24-13A	BOLT-FORWARD LEG	1	
-26	AN24-13A	BOLT-AFT LEG	1	
-27	AN24-16A	BOLT-AFT LEG	2	
-28	AN936A416	WASHER	2	
	AN936A616	WASHER	2	
-29	1414112-1	NUT		
		---*---	1	
-30	1414104-39	HOUSING-SEAT ROLLER FWD LH	1	
-31	1414104-40	HOUSING-SEAT ROLLER FWD RH	1	
-32	1414104-41	HOUSING-SEAT ROLLER AFT LH	1	
	1414104-42	HOUSING-SEAT ROLLER AFT RH	4	
-33	1414100-212	KIT-SEAT ROLLER		
		ATTACHING PARTS	1	
-34	AN23-19A	BOLT	1	
-35	AN960-10L	WASHER	1	
-36	S1914-8	NUT		
		---*---	1	
-37	1200504-1	HANDLE-SEAT ADJUSTMENT		
		ATTACHING PARTS	1	
-38	MS20392-2C34	PIN	1	
	MS24665-132	PIN-COTTER		
		---*---	1	
-39	1200505-1	PIN-SEAT ADJUSTMENT		
		ATTACHING PARTS	1	
-40	MS20392-1C21	PIN	1	
	MS24665-132	PIN-COTTER	1	
-41	NAS561-2-12	ROLL PIN		
		---*---	1	
-42	1414116-1	SPRING-SEAT ADJUSTMENT		

CONTINUED ON NEXT PAGE

FIGURE AND INDEX NO.	PART NUMBER	DESCRIPTION 1 2 3 4 5 6 7	UNITS PER ASSY	USABLE ON CODE
61A-43	1414104-8	BRACKET-SEAT ADJUSTMENT	1	
-44	1200504-3	HANDLE ASSEMBLY-RECLINING ADJUSTMENT	1	
		ATTACHING PARTS		
-45	NAS561-3-8	ROLL PIN	1	
		---*---		
-46	1200503-1	ARM ASSEMBLY-SEAT BACK ADJUST	1	
-47	1514223-28	LINK-SEAT BACK ADJUST	1	
		ATTACHING PARTS		
-48	MS20392-1C9	PIN	2	
-49	MS24665-132	PIN-COTTER	2	
		---*---		
-50	1414223-34	TUBE ASSEMBLY-TORQUE	1	
-51	0514043-1	PAWL-SEAT BACK ADJUST REPLACE IN PAIRS ONLY	2	
		ATTACHING PARTS		
	NAS561C3-10	ROLL PIN	1	
		---*---		
-52	1414107-1	SPRING-SEAT ADJUSTMENT	1	
-53	S1957-2	ASH RECEIVER	1	
-54	S1746W2	BELT ASSEMBLY-SEAT	2	B
	S2070W103 %*	BELT ASSEMBLY-SEAT	2	C
		ATTACHING PARTS		
-55	AN4-5A	BOLT	2	
-56	NAS43HT4-12	SPACER	2	
-56A	AN960-416	WASHER	3	
-57	NAS679A4	NUT OUTBOARD FITTINGS ONLY	1	
		---*---		
-58	0510205-5	FITTING-SEAT BELT LH OUTBOARD & RH INBOARD	2	
	0510205-6	FITTING-SEAT BELT RH OUTBOARD & LH INBOARD	2	
		ATTACHING PARTS		
-59	AN3-4A	BOLT	2	
-60	AN970-3	WASHER UNDER FORWARD NUT ONLY	1	
-61	MS21044N3	NUT	2	
		---*---		
-62	0514048-1 #	HEADREST ASSEMBLY	2	
-63	0514048-9 #	COVER-HEADREST	1	

NOTE. #THIS PART NUMBER MUST HAVE A SECOND DASH NUMBER ADDED TO DENOTE COLOR. REFER TO HOW TO ORDER UPHOLSTERED PARTS-PAGE XII.

NOTE. #THIS PART NUMBER MUST HAVE A SECOND DASH NUMBER ADDED TO DENOTE COLOR. REFER TO HOW TO ORDER INTERIOR PARTS-PAGE XIII.

NOTE. *SEE FIGURE 70 FOR SHOULDER HARNESS INSTL.

NOTE. %WHEN ORDERING SEAT BELT FOR AUSTRALIAN AIRCRAFT ADD VH TO PART NUMBER. EXAMPLE S2070W103VH.

A---SERIAL 18501600 THRU 18502310
SERIAL 18052104 THRU 18052384
B---SERIAL 18501600 THRU 18501832
SERIAL 18052104 THRU 18052175
C---SERIAL 18501833 THRU 18502310
SERIAL 18052176 THRU 18052384

Front Seat (Cont)

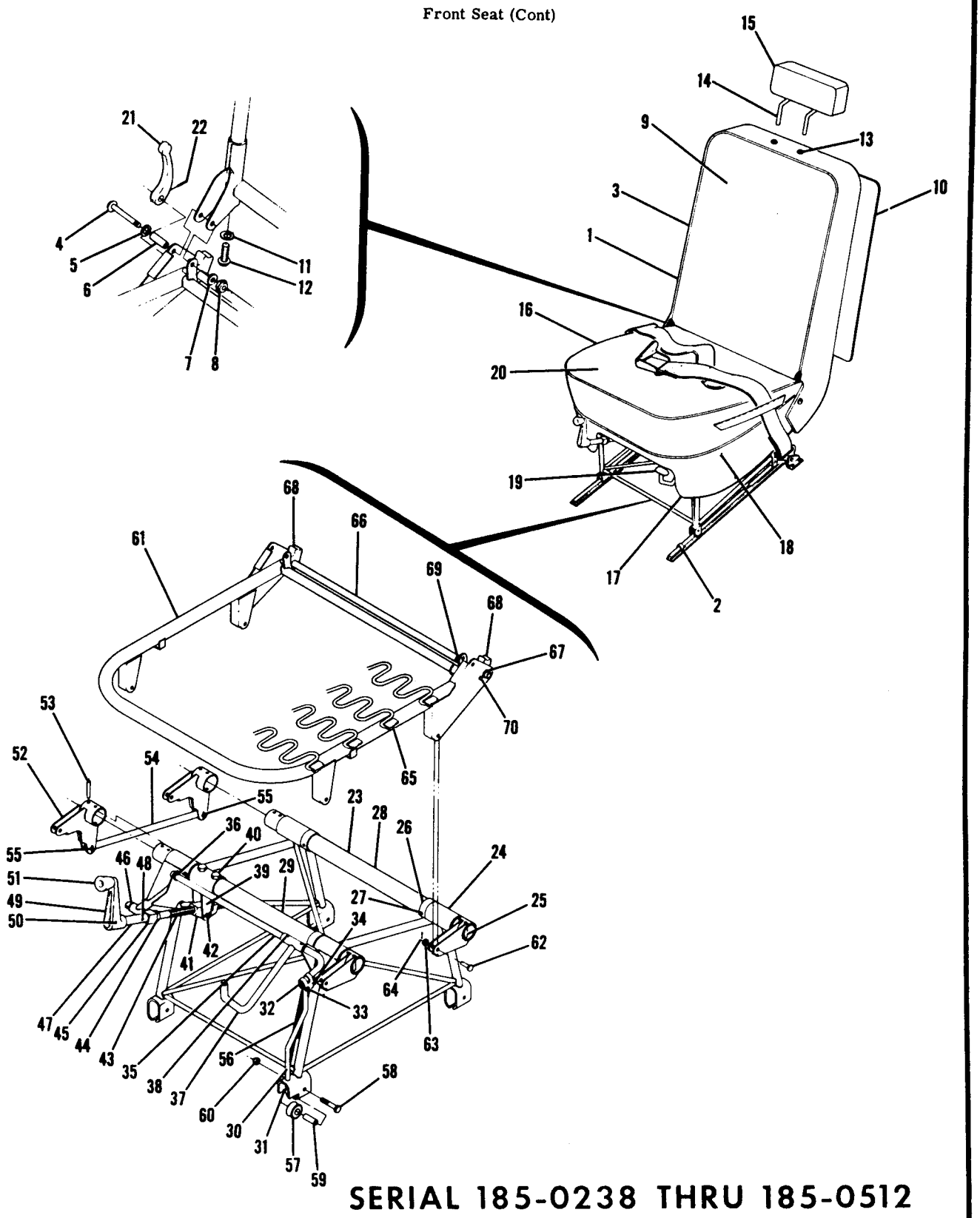

SERIAL 185-0238 THRU 185-0512

Figure 62. Adjustable Front Seat Installation

FIGURE AND INDEX NO.	PART NUMBER	DESCRIPTION 1 2 3 4 5 6 7	UNITS PER ASSY	USABLE ON CODE
62 -		SEAT INSTALLATION-ADJUSTABLE FRONT	NP	A
- 1	1200162-21	SEAT ASSEMBLY-ADJUSTABLE FRONT LH	1	
	1200162-22	SEAT ASSEMBLY-ADJUSTABLE FRONT RH	1	
		ATTACHING PARTS		
- 2	0713074-1	STOP-SEAT	2	
	MS20392-1C21	PIN-CLEVIS	2	
	MS24665-151	PIN-COTTER	2	
		---*---		
- 3	1200162-25	BACK ASSEMBLY-SEAT UPHOLSTERED LH	1	
	1200162-26	BACK ASSEMBLY-SEAT UPHOLSTERED RH	1	
		ATTACHING PARTS		
- 4	AN24-28A	BOLT	2	
- 5	AN960-416L	WASHER	2	
- 6	0710313-2	BUSHING	2	
- 7	S1074-1	WASHER	2	
- 8	NAS679A4	NUT	2	
		---*---		
- 9	1200162-28	COVER ASSEMBLY-SEAT BACK	1	
-10	0700105-425	PANEL ASSEMBLY-REAR	1	
	0700105-397	PLATE ASSEMBLY-ACTUATOR LEVER TRIM	1	
-11	AN960D10	WASHER	1	
-12	NAS603-10	SCREW	1	
-13	0700320-1	RETAINER-HEADREST	2	
	0800023-5	HEADREST ASSEMBLY-SEAT	1	
-14	1200108-1	FRAME-HEADREST	1	
-15	1200134-1	CUSHION-FOAM FILLER	1	
	0800023-3	COVER ASSEMBLY-HEADREST	1	
-16	1200162-23	CUSHION ASSEMBLY-SEAT UPHOLSTERED LH	1	
	1200162-24	CUSHION ASSEMBLY-SEAT UPHOLSTERED RH	1	
-17	1200161-1	SKIRT-FRONT SEAT	1	
		ATTACHING PARTS		
-18	S1021Z4-6	SCREW	11	
		---*---		
-19	1200164-1	KNOB-FRONT SEAT LATCH	1	
		ATTACHING PARTS		
	S1022Z6-10	SCREW	1	
		---*---		
-20	1200162-27	COVER-SEAT BOTTOM	1	
-21	0710312-2	HANDLE-SEAT BACK ACTUATOR	1	
		ATTACHING PARTS		
-22	NAS561C3-10	ROLLPIN	1	
		---*---		
		SEAT BOTTOM MECHANISM INSTALLATION-ADJUSTABLE	NP	
-23	1200163-1	BOTTOM ASSEMBLY-SEAT LH	1	
	1200163-2	BOTTOM ASSEMBLY-SEAT RH	1	
-24	1200142-1	ARM ASSEMBLY-LH SEAT	2	
	1200142-2	ARM ASSEMBLY-RH SEAT	2	
		ATTACHING PARTS		
-25	NAS561-6-18	ROLLPIN	2	
		---*---		
-26	1200136-1	COLLAR-TORQUE TUBE	3	
		ATTACHING PARTS		
-27	NAS561-6-18	ROLLPIN	1	
		---*---		
-28	1200147-1	TORQUE TUBE-AFT	1	
-29	1200147-2	TORQUE TUBE-FORWARD	1	
-30	1200152-1	LATCH PIN	1	
		ATTACHING PARTS		
-31	MS24665-132	PIN-COTTER	1	
-32	0311644	CLEVIS	1	
-33	MS20392-1C15	PIN-FLATHEAD	1	
	MS24665-134	PIN-COTTER	1	
-34	MS24665-285	PIN-COTTER	1	
		---*---		
-35	1200146-1	TORQUE TUBE-LATCH PIN	1	
		ATTACHING PARTS		
-36	AN960C616L	WASHER	1	
	MS24665-134	PIN-COTTER	1	
		---*---		
-37	1200157-1	ARM ASSEMBLY-SEAT CATCH PIN	1	
		ATTACHING PARTS		
-38	NAS561P3-8	ROLLPIN	2	
		---*---		

CONTINUED ON NEXT PAGE

FIGURE AND INDEX NO.	PART NUMBER	DESCRIPTION 1 2 3 4 5 6 7	UNITS PER ASSY	USABLE ON CODE
62 -39	1200141-1	BELLCRANK ASSEMBLY-LH SEAT SCREW	1	
	1200141-2	BELLCRANK ASSEMBLY-RH SEAT SCREW	1	
		ATTACHING PARTS		
-40	AN4-14A	BOLT	2	
	NAS679A4	NUT	2	
		---*---		
-41	1200139-1	NUT-SEAT ADJUST SCREW	1	
		ATTACHING PARTS		
-42	MS20392-2C20	PIN-FLATHEAD	1	
	AN960-10	WASHER	1	
	MS24665-132	PIN-COTTER	1	
		---*---		
-43	1200186-1	SCREW-ADJUSTABLE FRONT SEAT	1	
-44	1200138-1	COLLAR-ADJUSTABLE FRONT SEAT SCREW	1	
		ATTACHING PARTS		
	NAS561P4-10	ROLLPIN	1	
		---*---		
-45	1200154-1	BEARING BLOCK-SCREW	1	
		ATTACHING PARTS		
-46	AN960-716	WASHER	1	
	MS24665-351	PIN	1	
		---*---		
-47	1200156-1	SPACER-SCREW HANDLE	1	
		ATTACHING PARTS		
-48	NAS561P4-8	ROLLPIN	1	
		---*---		
-49	1200159-1	HANDLE ASSEMBLY-ADJUSTABLE FRONT SEAT	1	
		ATTACHING PARTS		
-50	NAS561P4-12	ROLLPIN	1	
		---*---		
-51	1200092-1	KNOB-SCREW HANDLE	1	
-52	1200143-1	ARM ASSEMBLY-SEAT LH	2	
	1200143-2	ARM ASSEMBLY-SEAT RH	2	
		ATTACHING PARTS		
-53	NAS561-6-18	ROLLPIN	2	
		---*---		
-54	1200137-1	ROD-SEAT ACTUATOR	1	
		ATTACHING PARTS		
-55	MS20392-2C17	PIN-FLATHEAD	2	
	AN960-10	WASHER	2	
	MS24665-132	PIN-COTTER	2	
		---*---		
-56	0310196-15	SPRING-SEAT LATCH PIN	1	
-57	0311310	ROLLER-SEAT	4	
		ATTACHING PARTS		
-58	AN3-11A	BOLT	1	
-59	0311586	BUSHING-ROLLER	1	
-60	MS21044N3	NUT	1	
		---*---		
-61	1200158-1	FRAME ASSEMBLY-SEAT LH	1	
	1200158-5	FRAME ASSEMBLY-SEAT RH	1	
		ATTACHING PARTS		
-62	MS20392-2C17	PIN	4	
-63	AN960-10	WASHER	4	
-64	MS24665-132	PIN-COTTER	4	
		---*---		
-65	S1146-1	CLIP-UPHOLSTERY SPRING	8	
-66	0710302-1	TUBE-SEAT BACK RECLINER	1	
		ATTACHING PARTS		
-67	AN960C616L	WASHER	2	
	NAS561C3-10	ROLLPIN	2	
		---*---		
-68	0710317-1	RECLINER CAM-SEAT BACK	2	
		ATTACHING PARTS		
	NAS561C3-12	ROLLPIN	1	
		---*---		
-69	0710308-1	SPRING-CAM RETURN	1	
-70	MS20392-1C39	PIN-FLATHEAD	2	
		ATTACHING PARTS		
	MS24665-132	PIN-COTTER	1	
		---*---		
		A---SERIAL 185-0238 THRU 185-0512		

FIGURE AND INDEX NO.	PART NUMBER		DESCRIPTION 1 2 3 4 5 6 7	UNITS PER ASSY	USABLE ON CODE
			SEAT INSTALLATION-VERTICALLY ADJUSTABLE FRONT	NP	B
63 -			SEAT ASSEMBLY-VERTICALLY ADJUSTABLE LH UTILITY	1	N
	0700630-9	#	SEAT ASSEMBLY-VERTICALLY ADJUSTABLE LH DELUXE	1	A
	0700630-11	#	SEAT ASSEMBLY-VERTICALLY ADJUSTABLE LH	1	S
	0700630-41	#	SEAT ASSEMBLY-VERTICALLY ADJUSTABLE LH AG CARRYALL	1	U
	0700630-47	#	SEAT ASSEMBLY-VERTICALLY ADJUSTABLE RH UTILITY	1	N
	0700630-10	#	SEAT ASSEMBLY-VERTICALLY ADJUSTABLE RH DELUXE	1	A
	0700630-12	#	SEAT ASSEMBLY-VERTICALLY ADJUSTABLE RH	1	S
	0700630-42	#	SEAT ASSEMBLY-VERTICALLY ADJUSTABLE RH AG CARRYALL	1	U
	0700630-48	#	ATTACHING PARTS		
- 1	0713074-1		STOP-SEAT	2	
	MS20392-1C21		PIN	2	
	MS24665-151		PIN-COTTER	2	
			---*---		
	0700630-207	#	BACK ASSEMBLY-UPHOLSTERED SEAT DELUXE	1	W
	0700630-225	#	BACK ASSEMBLY-UPHOLSTERED SEAT DELUXE	1	X
	0700630-208	#	BACK ASSEMBLY-UPHOLSTERED SEAT UTILITY	1	L
	0700630-226	#	BACK ASSEMBLY-UPHOLSTERED SEAT UTILITY	1	X
	0700630-224	#	BACK ASSEMBLY-UPHOLSTERED SEAT	1	P
			ATTACHING PARTS		
- 2	AN23-16A		BOLT	2	
- 3	1414104-4		BUSHING	2	
- 4	0711668-1		BUSHING	2	
- 5	0711667-1		SPRING	2	
- 6	AN507-832R14		SCREW	2	
- 7	NAS679A08		NUT	2	
- 8	AN960-10L		WASHER	2	
- 9	S1914-8		NUT		
			---*---		
- 9A	1414111-2		CAM-SEAT BACK ADJUST WHEN EXHAUSTED USE 1414111-5	2	G
	1414111-5		CAM-SEAT BACK ADJUST	2	H
-10	0500210-26	#	COVER-SEAT BACK DELUXE	1	A
	0700114-44	#	COVER-SEAT BACK UTILITY	1	N
	1200605-12	#	COVER-SEAT BACK	1	P
-11	1414100-9		CUSHION-SEAT BACK	1	N
	1200605-33		CUSHION-SEAT BACK	1	P
-12	1414110-1	¤	TRIM ASSEMBLY-SEAT BACK	1	L
	0715001-1	¤	TRIM ASSEMBLY-SEAT BACK	1	X
	1215034-200	#	TRIM ASSEMBLY-SEAT BACK	1	P
			ATTACHING PARTS		
-13	S1021Z8-6C		SCREW	3	N
			---*---		
-14	1414110-3	¤	POCKET ASSEMBLY-MAGAZINE	1	L
	1715023-3	¤	POCKET ASSEMBLY-MAGAZINE	1	X
	1414045-2		SPRING	1	X
	0700630-202	#	CUSHION ASSEMBLY-UPHOLSTERED SEAT BOTTOM DELUXE	1	A
	0700630-203	#	CUSHION ASSEMBLY-UPHOLSTERED SEAT BOTTOM UTILITY	1	N
	0700630-204	#	CUSHION ASSEMBLY-UPHOLSTERED SEAT BOTTOM	1	S
			CUSHION ASSEMBLY-UPHOLSTERED SEAT BOTTOM	NP	U
			ATTACHING PARTS		
-15	MS20392-2C17		PIN	4	
	MS24665-132		PIN-COTTER	4	
			---*---		
-16	0500210-24	#	COVER-SEAT BOTTOM DELUXE	1	A
	0700114-42	#	COVER-SEAT BOTTOM UTILITY	1	N
	1200605-11	#	COVER-SEAT BOTTOM	1	P
-17	1414100-8		CUSHION-SEAT BOTTOM	1	
-18	AN23-15A		BOLT LH SIDE ONLY	2	
	AN23-19A		BOLT RH SIDE ONLY	1	
	NAS43HT3-16		SPACER RH SIDE ONLY	1	
	MS21044N3		NUT	2	
-19	0700646-1	¤	SKIRT-SEAT BOTTOM LH	1	T
-20	0700646-2	¤	SKIRT-SEAT BOTTOM RH	1	T
			ATTACHING PARTS		
-21	S1021Z6-4		SCREW	4	T
			---*---		
-21A	0715020-1	¤	TRIM-SEAT BOTTOM AG CARRYALL	1	U
-22	1414217-3		RETAINER	1	
-23	1414217-7		RETAINER	1	
-24	S1021Z6-4		SCREW	14	

CONTINUED ON NEXT PAGE

Front Seat (cont)

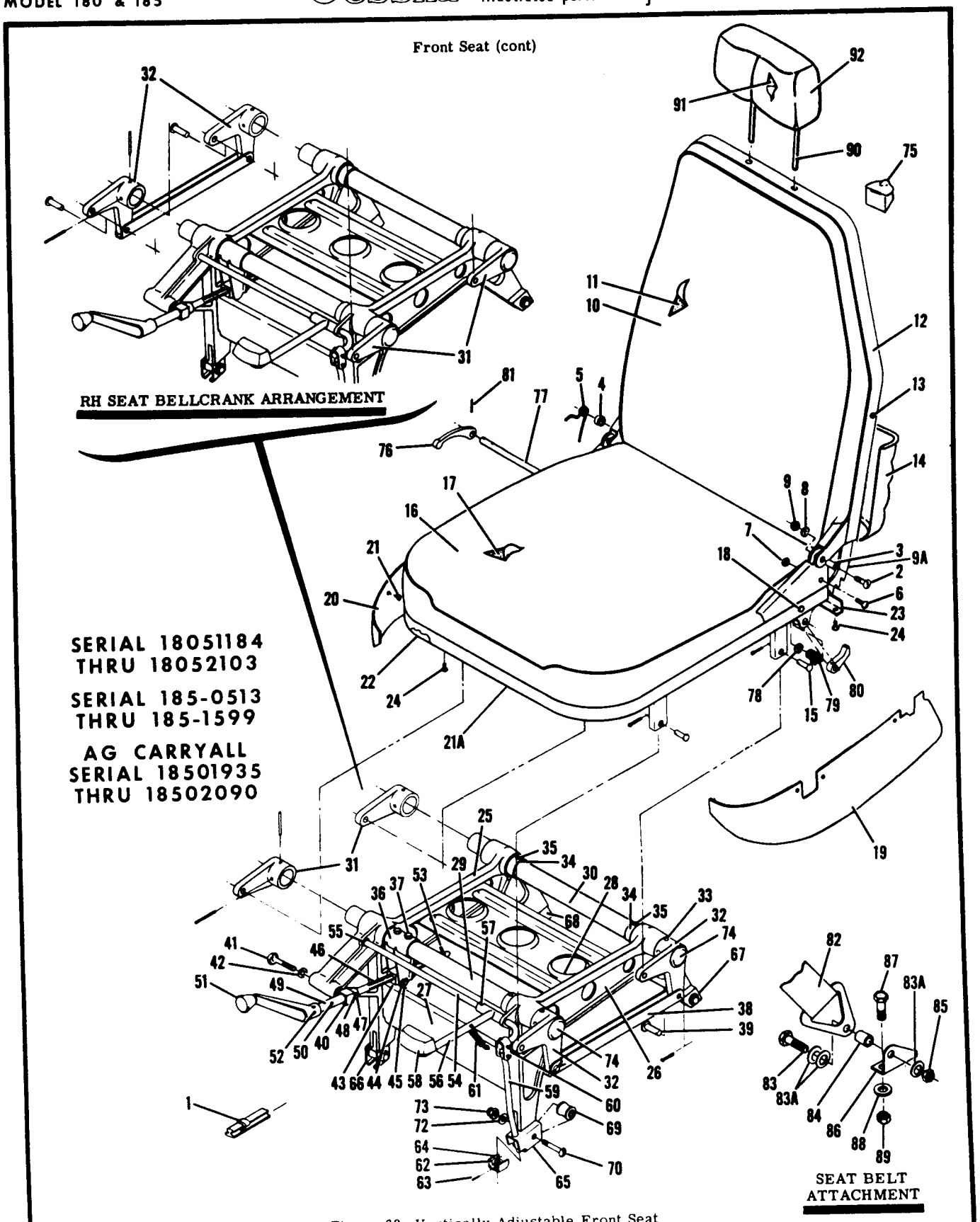

Figure 63. Vertically Adjustable Front Seat

FIGURE AND INDEX NO.	PART NUMBER	DESCRIPTION 1 2 3 4 5 6 7	UNITS PER ASSY	USABLE ON CODE
63 -	0700631-5	FRAME ASSEMBLY-SEAT BOTTOM LH	1	K
	0700631-5 ¤	FRAME ASSEMBLY-SEAT BOTTOM LH	1	F
	0700631-6	FRAME ASSEMBLY-SEAT BOTTOM RH	1	K
	0700631-6 ¤	FRAME ASSEMBLY-SEAT BOTTOM RH	1	F
-25	0700640-1	LEG-SEAT INBOARD LH	1	
	0700640-2	LEG-SEAT INBOARD RH	1	
-26	0700640-5	LEG-SEAT OUTBOARD LH	1	
	0700640-6	LEG-SEAT OUTBOARD RH	1	
-27	0700641-1	BRACE-FORWARD BULKHEAD WHEN EXHAUSTED USE 0700641-5 -	1	
	0700641-5	BRACE-FORWARD BULKHEAD	1	
-28	0700641-2	BRACE-UPPER BULKHEAD	1	
-29	0700639-1	TUBE-FORWARD TORQUE	1	
-30	0700639-2	TUBE-AFT TORQUE	2	
-31	0700633-2	BELLCRANK	2	
-32	0700633-4	BELLCRANK LH SEAT ONLY	2	
	0700633-1	BELLCRANK RH SEAT ONLY	8	
-33	NAS561P6-22	ROLLPIN	3	
-34	1200136-1	COLLAR	3	
-35	NAS561P6-18	ROLLPIN	1	
-36	1200141-1	BELLCRANK-LH	1	
	1200141-2	BELLCRANK-RH		
		ATTACHING PARTS		
-37	AN4-14A	BOLT	2	
	NAS679A4	NUT	2	
		---*---		
-38	0700634-1	CHANNEL-PUSH PULL	1	
		ATTACHING PARTS		
-39	MS20392-2C17	PIN	2	
	MS24665-132	PIN-COTTER	2	
		---*---		
-40	0700638-1	BLOCK-BEARING	1	
-41	AN520-10R8	SCREW	1	
-42	AN960-10L	WASHER	1	
-43	1200139-1	NUT	1	
-44	AN960-10	WASHER	1	
-45	MS20392-2C27	PIN	1	
	MS24665-132	PIN-COTTER	1	
-46	1200186-1	SCREW-SEAT ADJUSTMENT	1	
-47	1200138-1	COLLAR	1	
-48	NAS561P4-10	ROLLPIN	1	
-49	1200156-1	SPACER	1	
-50	NAS561P4-8	ROLLPIN	1	
-51	1200159-1	HANDLE ASSEMBLY-VERTICAL ADJUSTMENT	2	
-52	NAS561P4-12	ROLLPIN	1	
-53	NAS561P4-10	ROLLPIN	1	
-54	0700642-1	TUBE-SEAT ADJUSTMENT TORQUE	1	
-55	AN960-616L	WASHER	1	
	MS24665-5	PIN-COTTER	1	
-56	0700643-1	ARM-SEAT ADJUSTMENT	2	
-57	NAS561P3-8	ROLLPIN	1	
-58	1200164-1	KNOB-FORE & AFT ADJUSTMENT		
		ATTACHING PARTS		
	S1022Z6-10	SCREW	1	
		---*---		
-59	0700644-1	PIN-SEAT ADJUSTMENT	1	
-60	1414104-56	CLAMP	1	
	MS24665-134	PIN-COTTER	2	
-61	1414116-1	SPRING	1	
-62	AN960-416	WASHER	1	
-63	MS24665-132	PIN-COTTER	1	
-64	1414104-8	BRACKET-SEAT ADJUSTMENT	1	
-65	0700645-1	HOUSING-ROLLER	1	
-66	0700645-2	HOUSING-ROLLER	1	
-67	0700645-3	HOUSING-ROLLER	1	
-68	0700645-4	HOUSING-ROLLER	4	
-69	1414100-212	SEAT ROLLER KIT		
		ATTACHING PARTS		
-70	AN23-19A	BOLT	1	
-71		DELETED, NOT AVAILABLE		
-72	AN960-10L	WASHER	1	
-73	S1914-8	NUT	1	
		---*---		
-74	51045	PLUG BUTTON UC	2	

CONTINUED ON NEXT PAGE

FIGURE AND INDEX NO.	PART NUMBER		DESCRIPTION 1 2 3 4 5 6 7	UNITS PER ASSY	USABLE ON CODE
			ASH RECEIVER-SEAT BACK	1	
63 -75	S1957-2		RETAINER-ASH RECEIVER GDR	1	P
	1A1001		ATTACHING PARTS		
			SCREW	2	P
	S1021Z6-8		NUT	2	P
	NAS395-5		---*---		
-76	0710312-2		HANDLE-RECLINING ADJUSTMENT	1	
-77	1414104-1		TUBE-SEAT ADJUSTMENT TORQUE	1	
-78	AN960D616		WASHER	2	
-79	1414107-1		SPRING-SEAT ADJUSTMENT	1	
-80	0700636-1		PAWL-SEAT ADJUSTMENT	2	
-81	NAS561C3-10		PIN	3	
-82	S1060-15		BELT ASSEMBLY-FRONT SEAT BEIGE	2	D
	S1618B3		BELT ASSEMBLY-FRONT SEAT BLACK	2	E
	S1618D3		BELT ASSEMBLY-FRONT SEAT TAN	2	V
	S2070W103	Z*	BELT ASSEMBLY-FRONT SEAT CLOVE BROWN	2	U
			ATTACHING PARTS		
-83	AN4-5A		BOLT	2	
-83A	AN960-416		WASHER	3	U
-84	NAS43HT4-20		SPACER	2	T
	NAS43HT4-12		SPACER	2	U
-85	NAS679A4		NUT	2	T
	NAS679A4		NUT OUTBOARD FITTINGS ONLY	1	U
			---*---		
-86	0511301-18		FITTING-SEAT BELT INBOARD LH & OUTBOARD RH WHEN EXHAUSTED USE 0510205-6	2	Q
	0510205-6		FITTING-SEAT BELT INBOARD LH & OUTBOARD RH	2	R
	0511301-19		FITTING-SEAT BELT OUTBOARD LH & INBOARD RH WHEN EXHAUSTED USE 0510205-5	2	Q
	0510205-5		FITTING-SEAT BELT OUTBOARD LH & INBOARD RH	2	R
			ATTACHING PARTS		
-87	AN3-4A		BOLT INBOARD FITTINGS ONLY	2	
	AN3-5A		BOLT OUTBOARD FITTINGS ONLY	2	
-88	AN970-3		WASHER UNDER FORWARD NUT ONLY	1	
-89	MS21044N3		NUT	2	
			---*---		
	1414252-1	#	HEADREST ASSEMBLY	2	L
	1714040-1	#	HEADREST ASSEMBLY	2	M
	0514048-1	#	HEADREST ASSEMBLY	2	U
-90	1414252-2		FRAME-HEADREST	1	T
-91	1414252-7		CUSHION-HEADREST	1	L
	1714035-1		CUSHION-HEADREST	1	M
-92	1414252-6	#	COVER-HEADREST	1	L
	1714040-2	#	COVER-HEADREST	1	M
	0514048-9	#	COVER-HEADREST	1	U

NOTE. #THIS PART NUMBER MUST HAVE A SECOND DASH NUMBER ADDED TO DENOTE COLOR. REFER TO HOW TO ORDER UPHOLSTERED PARTS-PAGE XII.

NOTE. #THIS PART NUMBER MUST HAVE A SECOND DASH NUMBER ADDED TO DENOTE COLOR. REFER TO HOW TO ORDER INTERIOR PARTS-PAGE XIII.

NOTE. *SEE FIGURE 70 FOR SHOULDER HARNESS INSTL.

NOTE. ZWHEN ORDERING SEAT BELT FOR AUSTRALIAN AIRCRAFT ADD VH TO PART NUMBER. EXAMPLE S2070W103VH.

A---SERIAL 185-0654 THRU 185-1447
SERIAL 18051184 THRU 18051993
B---SERIAL 185-0513 THRU 185-1599
SERIAL 18501935 THRU 18502090 AG CARRYALL
SERIAL 18051184 THRU 18052103
C---SERIAL 185-0777 THRU 185-1599
SERIAL 18051446 THRU 18052103

CONTINUED ON NEXT PAGE

FIGURE AND INDEX NO.	PART NUMBER	DESCRIPTION 1 2 3 4 5 6 7	UNITS PER ASSY	USABLE ON CODE
63 -		D---SERIAL 185-0513 THRU 185-0776		
		SERIAL 18051184 THRU 18051445		
		E---SERIAL 185-0777 THRU 185-0967		
		SERIAL 18051446 THRU 18051607		
		F---SERIAL 185-0968 THRU 185-1599		
		SERIAL 18501935 THRU 18502090 AG CARRYALL		
		SERIAL 18051608 THRU 18052103		
		G---SERIAL 185-0513 THRU 185-0926		
		SERIAL 18051184 THRU 18051573		
		H---SERIAL 185-0927 THRU 185-1599		
		SERIAL 18501935 THRU 18502090 AG CARRYALL		
		SERIAL 18051574 THRU 18052103		
		K---SERIAL 185-0513 THRU 185-0967		
		SERIAL 18051184 THRU 18051607		
		L---SERIAL 185-0513 THRU 185-1300		
		SERIAL 18051184 THRU 18051875		
		M---SERIAL 185-1301 THRU 185-1599		
		SERIAL 18051876 THRU 18052103		
		N---SERIAL 185-0513 THRU 185-1447		
		SERIAL 18051184 THRU 18051993		
		P---SERIAL 185-1448 THRU 185-1599		
		SERIAL 18501935 THRU 18502090 AG CARRYALL		
		SERIAL 18051994 THRU 18052103		
		Q---SERIAL 185-0513 THRU 185-1563		
		SERIAL 18051184 THRU 18052085		
		R---SERIAL 185-1564 THRU 185-1599		
		SERIAL 18501935 THRU 18502090 AG CARRYALL		
		SERIAL 18052086 THRU 18052103		
		S---SERIAL 185-1448 THRU 185-1599		
		SERIAL 18051994 THRU 18052103		
		T---SERIAL 185-0513 THRU 185-1599		
		SERIAL 18051184 THRU 18052103		
		U---SERIAL 18501935 THRU 18502090 AG CARRYALL		
		V---SERIAL 185-0968 THRU 185-1599		
		SERIAL 18051608 THRU 18052103		
		W---SERIAL 185-0654 THRU 185-1300		
		SERIAL 18051184 THRU 18051875		
		X---SERIAL 185-1301 THRU 185-1447		
		SERIAL 18051876 THRU 18051993		

FIGURE AND INDEX NO.	PART NUMBER		DESCRIPTION 1 2 3 4 5 6 7	UNITS PER ASSY	USABLE ON CODE
63A-			PILOT & CO-PILOT POWER ADJUSTABLE SEAT INSTL.	NP	A
	1414265-11	#	SEAT ASSEMBLY-PILOT POWER VERTICALLY ADJUSTABLE	1	
	1414265-12	#	SEAT ASSEMBLY-CO-PILOT POWER VERTICALLY ADJUSTABLE	1	
			ATTACHING PARTS		
- 1	0511242-1		STOP-SEAT	4	
- 2	AN500A8-4		SCREW	4	
			---*---		
	1414265-212	#	BACK ASSEMBLY-UPHOLSTERED SEAT	1	
			ATTACHING PARTS		
- 3	AN23-16A		BOLT	2	
- 4	NAS43HT4-18		SPACER	2	
- 5	1414104-4		BUSHING	2	
- 6	AN960-10L		WASHER	2	
- 7	S1914-8		NUT	2	
			---*---		
- 8	0700114-44	#	COVER-SEAT BACK	1	
- 9	1414100-9		CUSHION-SEAT BACK	1	
-10	1414264-13	¤	TRIM ASSEMBLY-SEAT BACK	1	
			ATTACHING PARTS		
-11	S1021Z8-6C		SCREW	AR	
			---*---		
-12	1414264-5	¤	POCKET ASSEMBLY MAGAZINE	1	

CONTINUED ON NEXT PAGE

Front Seat (Cont)

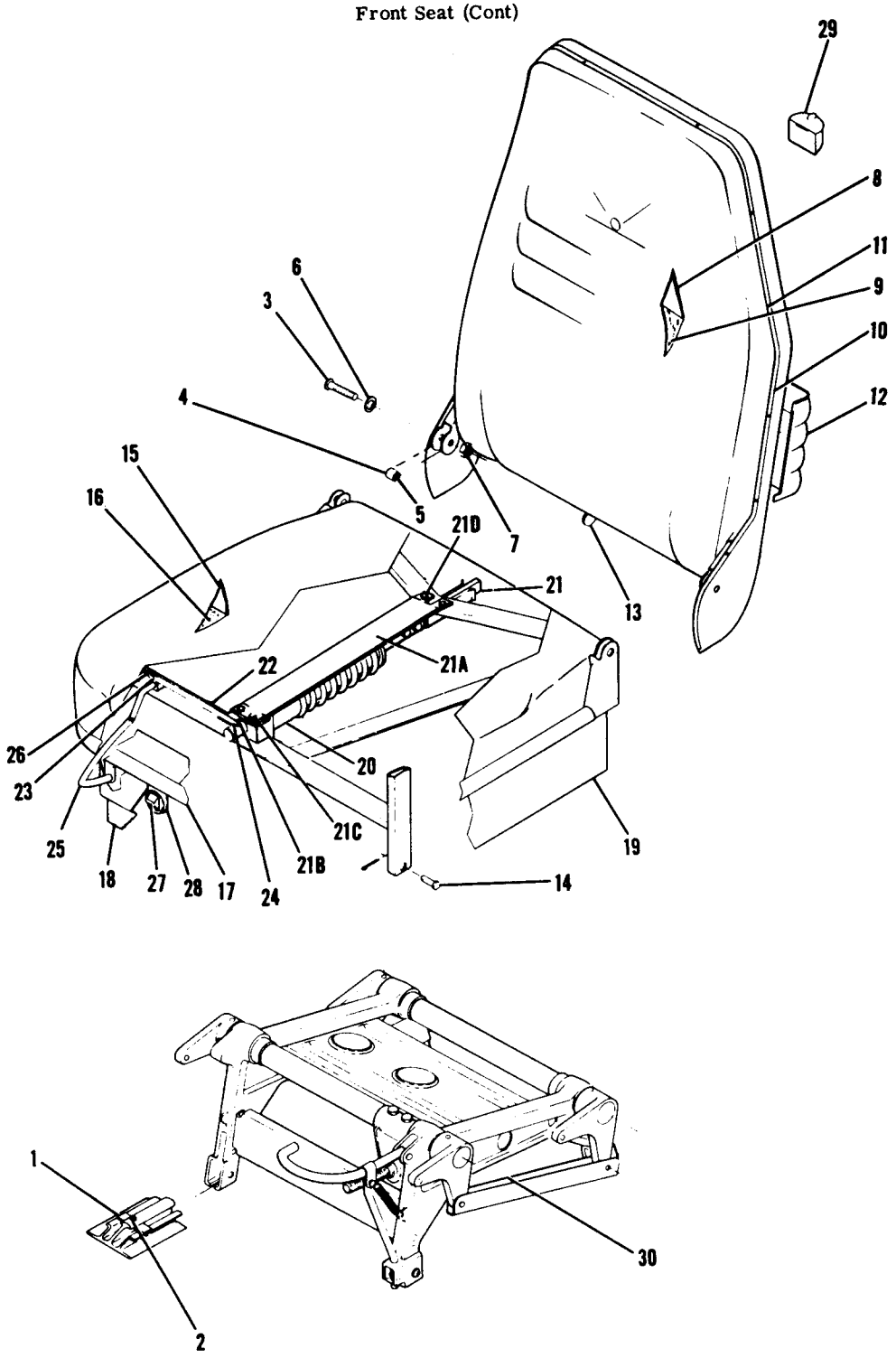

SERIAL 185-0691 THRU 185-1149
SERIAL 18051347 THRU 18051774

Figure 63A. Pilot & Co-Pilot Power Adjustable Seat Installation

FIGURE AND INDEX NO.	PART NUMBER	DESCRIPTION 1 2 3 4 5 6 7	UNITS PER ASSY	USABLE ON CODE
63A-13	1414262-1	CAM-SEAT BACK RECLINE	1	
		ATTACHING PARTS		
	AN3-10A	BOLT	3	
	AN960-10L	WASHER	3	
	MS21044N3	NUT	3	
		---*---		
	1414265-213 #	CUSHION ASSEMBLY-UPHOLSTERED SEAT BOTTOM	1	
		ATTACHING PARTS		
-14	MS20392-2C17	PIN	4	
	MS24665-132	COTTER PIN	4	
		---*---		
-15	0700114-42 #	COVER-SEAT BOTTOM	1	
-16	1414265-8	CUSHION-SEAT BOTTOM	1	
-17	1414217-7	RETAINER-SEAT BOTTOM	1	
	1414217-3	RETAINER-SEAT BOTTOM	1	
		ATTACHING PARTS		
	S1021Z6-4	SCREW	12	
		---*---		
-18	0700646-3 ¤	SKIRT-SEAT LH	1	
-19	0700646-4 ¤	SKIRT-SEAT RH	1	
		ATTACHING PARTS		
	S1021Z6-4	SCREW	AR	
		---*---		
-20	1414266-1	ACTUATOR-SEAT BACK	1	
-21	1414261-1	STOP-SEAT BACK	1	
		ATTACHING PARTS		
	AN3-10A	BOLT	2	
	AN960-10L	WASHER	2	
	MS21044N3	NUT	2	
		---*---		
-21A	1514059-1	STIFFENER	1	B
		ATTACHING PARTS		
-21B	1414269-1	SEAT STOP	1	B
-21C	AN3-17A	BOLT	2	B
	AN960-10L	WASHER	4	B
	MS21044N3	NUT	4	B
	NAS43DD3-12	SPACER UNDER STIFFENER	2	B
	NAS43DD3-3	SPACER BETWEEN ACTUATOR & FRAME	2	B
-21D	AN3-13A	BOLT	2	B
		---*---		
-22	1414258-1	LINK	1	
		ATTACHING PARTS		
-23	MS20392-1C9	PIN	2	
	MS24665-132	COTTER PIN	2	
		---*---		
-24	1414259-1	SCREW	1	
-25	1414257-5	HANDLE ASSEMBLY	1	
		ATTACHING PARTS		
	MS24665-283	COTTER PIN	2	
		---*---		
-26	1200478-2	SPRING-HANDLE RETURN	1	
-27	1414268-1	SWITCH ASSEMBLY	1	
-28	1414267-1	BRACKET-SWITCH	1	
		ATTACHING PARTS		
	S1021Z6-6	SCREW	2	
		---*---		
	0700719-1 ¤	COVER-FLOORBOARD TERMINAL	1	
-29	S1957-2	ASH RECEIVER	1	
-30		POWER SEAT BOTTOM ASSEMBLY SEE FIGURE 63B	1	

NOTE. #THIS PART NUMBER MUST HAVE A SECOND DASH NUMBER ADDED TO DENOTE COLOR. REFER TO HOW TO ORDER UPHOLSTERED PARTS-PAGE XII.

NOTE. ¤THIS PART NUMBER MUST HAVE A SECOND DASH NUMBER ADDED TO DENOTE COLOR. REFER TO HOW TO ORDER INTERIOR PARTS-PAGE XIII.

A---SERIAL 18051347 THRU 18051774
SERIAL 185-0691 THRU 185-1149
B---SERIAL 18051504 THRU 18051774
SERIAL 185-0828 THRU 185-1149

Front Seat (Cont)

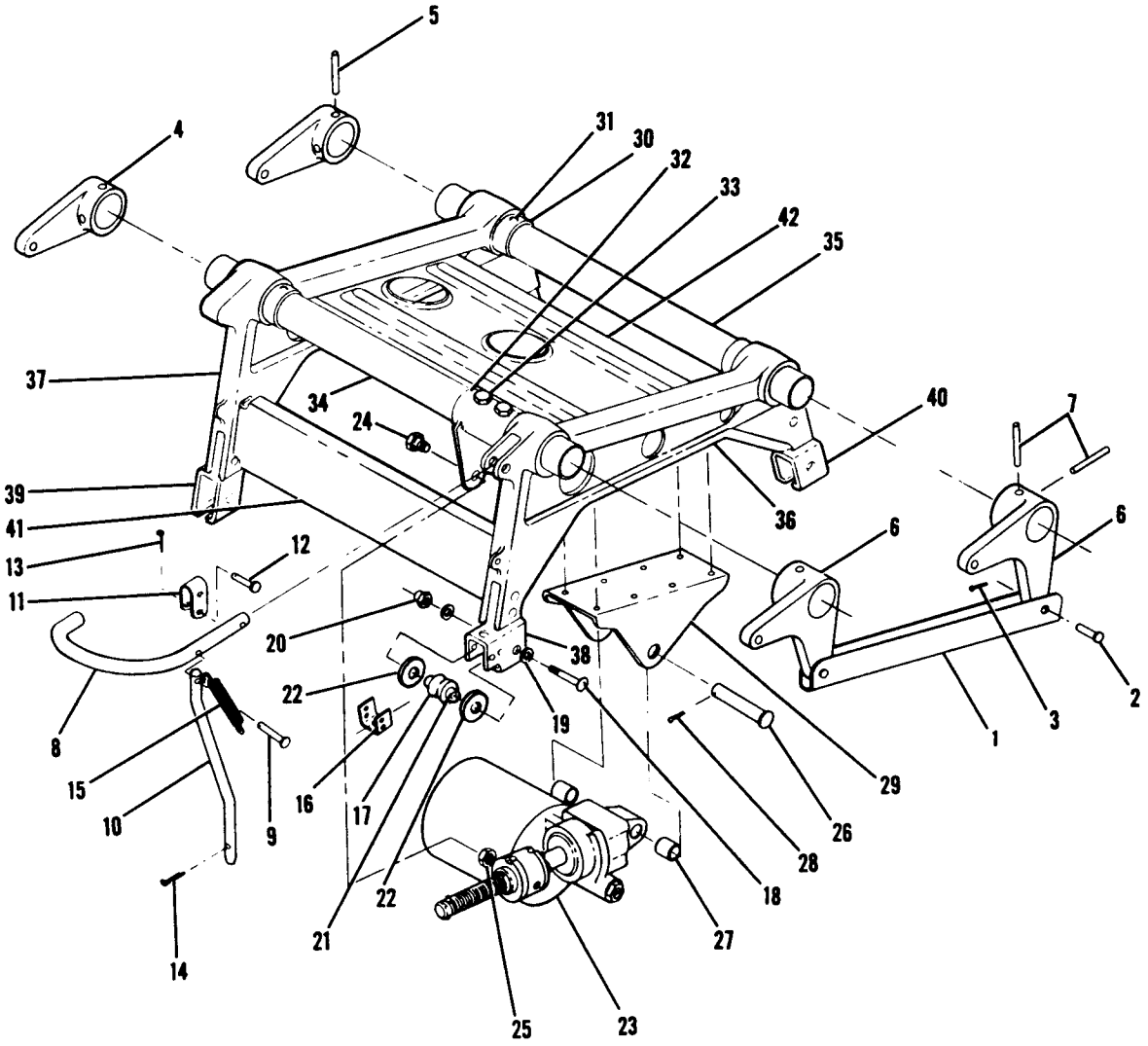

SERIAL 185-0691 THRU 185-1149
SERIAL 18051347 THRU 18051774

Figure 63B. Power Seat Bottom Assembly - Pilot & Co-Pilot

FIGURE AND INDEX NO.	PART NUMBER	DESCRIPTION 1 2 3 4 5 6 7	UNITS PER ASSY	USABLE ON CODE
638-	1414240-3	POWER SEAT BOTTOM ASSEMBLY-PILOTS	1	A
	1414240-3 ¤	POWER SEAT BOTTOM ASSEMBLY-PILOTS	1	B
	1414240-4	POWER SEAT BOTTOM ASSEMBLY-CO-PILOTS	1	A
	1414240-4 ¤	POWER SEAT BOTTOM ASSEMBLY-CO-PILOTS	1	B
- 1	0700634-1	CHANNEL OUTBOARD SIDE ONLY	1	
		ATTACHING PARTS		
- 2	MS20392-2C17	PIN	2	
- 3	MS24665-132	COTTER PIN	2	
		---*---		
- 4	0700633-2	BELLCRANK-INBOARD	2	
		ATTACHING PARTS		
- 5	NAS561P6-22	ROLL PIN	4	
		---*---		
- 6	0700633-4	BELLCRANK-OUTBOARD PILOTS SEAT	2	
	0700633-1	BELLCRANK-OUTBOARD CO-PILOTS SEAT	2	
		ATTACHING PARTS		
- 7	NAS561P6-22	ROLL PIN	4	
		---*---		
- 8	1414248-1	HANDLE-SEAT ADJUSTMENT	1	
		ATTACHING PARTS		
- 9	MS20392-2C21	PIN	1	
	MS24665-132	COTTER PIN	1	
		---*---		
-10	1414245-2	ROD-SEAT ADJUSTMENT	1	
		ATTACHING PARTS		
-11	1414104-56	CLAMP	1	
-12	MS20392-1C15	PIN	2	
-13	MS24665-132	COTTER PIN	2	
-14	MS24665-132	COTTER PIN	1	
		---*---		
-15	1414116-1	SPRING	1	
-16	1414104-8	BRACKET-SEAT ADJUSTMENT ROD	1	
-17	S1551-1	ROLLER-SEAT	4	
		ATTACHING PARTS		
-18	AN23-19A	BOLT	1	
-19	AN960-10L	WASHER	2	
-20	S1914-8	NUT	1	
-21	1414104-54	BUSHING-SEAT ROLLER	1	
-22	S1554-1	WASHER	2	
		---*---		
-23	1414249-2	MOTOR ASSEMBLY	1	
		ATTACHING PARTS		
-24	1414247-1	BOLT	1	
-25	AN316C5R	NUT	1	
-26	MS20392-5C65	PIN	1	
-27	NAS43DD6-33	SPACER	2	
-28	MS24665-283	COTTER PIN	1	
		---*---		
-29	1414242-1	BRACKET-MOTOR ASSEMBLY	1	
-30	1200136-1	COLLAR-TORQUE TUBE	3	
		ATTACHING PARTS		
-31	NAS561P6-18	ROLL PIN	3	
		---*---		
-32	1414243-1	BELLCRANK	1	
		ATTACHING PARTS		
-33	AN4-14A	BOLT	2	
	NAS679A4	NUT	2	
		---*---		
-34	0700639-3	TORQUE TUBE-FORWARD	1	
-35	0700639-2	TORQUE TUBE-AFT	1	
-36	1414241-3	LEG-LH	1	
-37	1414241-4	LEG-RH	1	
-38	0700645-1	HOUSING-SEAT ROLLER FWD LH	1	
-39	0700645-2	HOUSING-SEAT ROLLER FWD RH	1	
-40	0700645-3	HOUSING-SEAT ROLLER AFT LH	1	
	0700645-4	HOUSING-SEAT ROLLER AFT RH	1	
-41	0700641-3	BRACE-SEAT	1	
-42	0700641-4	BRACE-SEAT	1	

NOTE. ¤THIS PART NUMBER MUST HAVE A SECOND DASH NUMBER ADDED TO DENOTE COLOR. REFER TO HOW TO ORDER INTERIOR PARTS-PAGE XIII.

A---SERIAL 18051347 THRU 18051607
SERIAL 185-0691 THRU 185-0967
B---SERIAL 18051608 THRU 18051774
SERIAL 185-0968 THRU 185-1149

Seats (Cont)

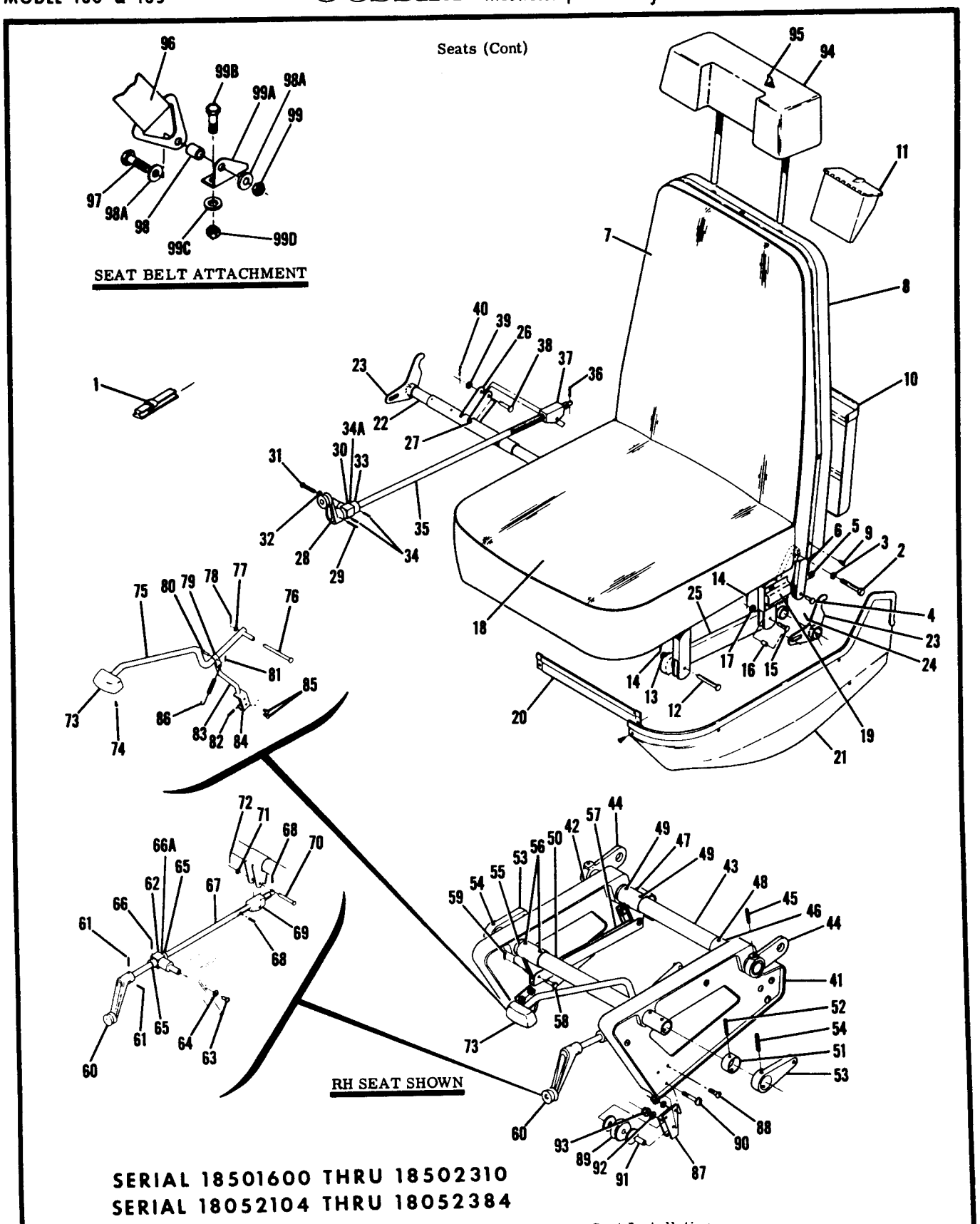

SERIAL 18501600 THRU 18502310
SERIAL 18052104 THRU 18052384

Figure 63C. Infinitely Adjustable Front Seat Installation

FIGURE AND INDEX NO.	PART NUMBER	DESCRIPTION 1 2 3 4 5 6 7	UNITS PER ASSY	USABLE ON CODE
63C-		FRONT SEAT INSTALLATION-INFINITE ADJUST	NP	A
	0515001-1 #	FRONT SEAT ASSEMBLY-INFINITE ADJUST CO-PILOT	1	B
	0515001-26 #	FRONT SEAT ASSEMBLY-INFINITE ADJUST CO-PILOT	1	C
	0515001-20 #	FRONT SEAT ASSEMBLY-INFINITE ADJUST PILOT	1	B
	0515001-25 #	FRONT SEAT ASSEMBLY-INFINITE ADJUST PILOT	1	C
		ATTACHING PARTS	2	
- 1	0713074-1	STOP-SEAT	2	
	MS20392-1C21	PIN	2	
	MS24665-151	PIN-COTTER		
		---*---	1	B
	0515001-200 #	BACK ASSEMBLY-UPHOLSTERED SEAT	NP	C
		BACK ASSEMBLY-UPHOLSTERED SEAT		
		ATTACHING PARTS	2	
- 2	AN3-17A	BOLT	4	
- 3	AN960-10L	WASHER	2	
	0514029-2	SPACER	2	
	MS21044N3	NUT	2	
- 4	MS20392-2C11	PIN	2	
- 5	AN960-10L	WASHER	2	
- 6	MS24665-132	PIN-COTTER		
		---*---	1	B
- 7	0515001-7 #	COVER ASSEMBLY-SEAT BACK	1	C
	0515001-42 #	COVER ASSEMBLY-SEAT BACK	1	B
- 8	0514018-1 ¤	TRIM ASSEMBLY-SEAT BACK	1	C
	0514018-15 ¤	TRIM ASSEMBLY-SEAT BACK		
		ATTACHING PARTS	3	
- 9	S1021A4-6	SCREW		
		---*---	1	
-10	0514018-3 ¤	POCKET ASSEMBLY-MAGAZINE	1	
-11	S1957-2	ASH RECEIVER	1	B
	0515001-201 #	BOTTOM ASSEMBLY-UPHOLSTERED SEAT CO-PILOT	1	B
	0515001-210 #	BOTTOM ASSEMBLY-UPHOLSTERED SEAT PILOT	NP	C
		BOTTOM ASSEMBLY-UPHOLSTERED SEAT		
		ATTACHING PARTS	2	
-12	MS20392-3C49	PIN	2	
-13	AN960-416L	WASHER	4	
-14	MS24665-134	PIN-COTTER	2	
-15	MS20392-3C17	PIN	2	
-16	0514029-1	SPACER	2	
-17	AN960-416L	WASHER		
		---*---	1	B
-18	0515001-10 #	COVER ASSEMBLY-SEAT BOTTOM	1	C
	0515001-38 #	COVER ASSEMBLY-SEAT BOTTOM	1	
-19	0514101-1	SUPPORT-SEAT TRIM LH	1	
	0514101-2	SUPPORT-SEAT TRIM RH		
		ATTACHING PARTS	2	
	S1021A4-6	SCREW		
		---*---	1	
-20	0514017-3 ¤	TRIM	1	J
-21	0514017-1 ¤	TRIM-LH WEU 0714010-1	1	J
	0514017-2 ¤	TRIM-RH WEU 0714010-2	1	K
	0714010-1 ¤	TRIM-LH	1	K
	0714010-2 ¤	TRIM-RH		
		ATTACHING PARTS	4	
	S1021A4-6	SCREW		
		---*---	1	
-22	0514026-11	TUBE-TORQUE	2	
-23	0514030-4	BELLCRANK ASSEMBLY-SEAT BACK ADJUST		
		ATTACHING PARTS	2	
-24	NAS561P4-12	ROLL PIN		
		---*---	2	
-25	0514060-5	BRACKET-SEAT PIVOT	1	F
-26	0514028-10	BELLCRANK ASSEMBLY-SEAT ADJUST	1	H
	0514028-15	BELLCRANK ASSEMBLY-SEAT ADJUST PILOT	1	H
	0514028-16	BELLCRANK ASSEMBLY-SEAT ADJUST CO-PILOT		
		ATTACHING PARTS	5	
-27	NAS561P6-12	ROLL PIN		
		---*---		

CONTINUED ON NEXT PAGE

FIGURE AND INDEX NO.	PART NUMBER	DESCRIPTION 1 2 3 4 5 6 7	UNITS PER ASSY	USABLE ON CODE
63C-28	0514036-1	HANDLE ASSEMBLY-SEAT BACK ADJUST	1	
		ATTACHING PARTS		
-29	NAS561P4-12	ROLL PIN	1	
		---*---		
-30	0514033-1	BEARING BLOCK	1	
		ATTACHING PARTS		
-31	AN520-10P8	SCREW	1	
-32	AN960-10L	WASHER	1	
		---*---		
-33	1200138-2	COLLAR	2	
		ATTACHING PARTS		
-34	NAS561P4-12	ROLL PIN	1	
		---*---		
-34A	S2013-2	BEARING	1	E
	S2014-2	RACE	2	E
-35	0514027-2	SCREW ASSEMBLY WEU 0514027-6	1	D
	0514027-6 **	SCREW ASSEMBLY	1	G
	0514027-9	SCREW ASSEMBLY	1	H
-36	NAS561P4-10	ROLL PIN	1	
-37	1200139-1	NUT-SEAT ADJUST	1	
		ATTACHING PARTS		
-38	MS20392-2C37	PIN	1	
-39	AN960-10	WASHER	1	
-40	MS24665-132	PIN-COTTER	1	
		---*---		
	0514024-1	PEDESTAL ASSEMBLY-CO-PILOT SEAT	1	
	0514024-2	PEDESTAL ASSEMBLY-PILOT SEAT	1	
-41	0514035-1	PEDESTAL-LH	1	
-42	0514035-2	PEDESTAL-RH	1	
-43	0514026-2	TORQUE TUBE-REAR	1	
-44	0514034-1	BELLCRANK-VERTICAL ADJUSTMENT REAR	2	
		ATTACHING PARTS		
-45	NAS561P6-28	ROLL PIN	1	
		---*---		
-46	0514028-6	BELLCRANK ASSEMBLY-REAR TORQUE TUBE	1	
-47	0514028-5	BELLCRANK ASSEMBLY-REAR TORQUE TUBE	1	
		ATTACHING PARTS		
-48	NAS561P8-18	ROLL PIN LH BELLCRANK	2	
-49	NAS561P6-18	ROLL PIN RH BELLCRANK	2	
		---*---		
-50	0514026-4	TORQUE TUBE-FORWARD	1	
-51	1200136-1	COLLAR-FRONT TORQUE TUBE	3	
		ATTACHING PARTS		
-52	NAS561P6-18	ROLL PIN	1	
		---*---		
-53	0700633-5	BELLCRANK ASSEMBLY-VERTICAL ADJUSTMENT FRONT	2	
		ATTACHING PARTS		
-54	NAS561P6-22	ROLL PIN	1	
		---*---		
-55	0514028-5	BELLCRANK ASSEMBLY-FRONT TORQUE TUBE	1	
		ATTACHING PARTS		
-56	NAS561P6-18	ROLL PIN	2	
		---*---		
-57	0514032-1	CHANNEL-TORQUE TUBE INTERCONNECT	1	
		ATTACHING PARTS		
-58	MS20392-2C37	PIN	2	
-59	MS24665-132	PIN-COTTER	2	
		---*---		
-60	1200159-3	HANDLE ASSEMBLY-VERTICAL ADJUST	1	
		ATTACHING PARTS		
-61	NAS561P4-12	ROLL PIN	2	
		---*---		
-62	0514033-1	BEARING BLOCK	1	
		ATTACHING PARTS		
-63	AN520-10R8	SCREW	1	
-64	AN960-10L	WASHER	1	
		---*---		

CONTINUED ON NEXT PAGE

FIGURE AND INDEX NO.	PART NUMBER	DESCRIPTION 1 2 3 4 5 6 7	UNITS PER ASSY	USABLE ON CODE
63C-65	1200138-1	COLLAR	2	
		ATTACHING PARTS		
-66	NAS561P4-12	ROLL PIN	1	
		---*---		
-66A	S2013-2	BEARING	1	E
	S2014-2	RACE	2	E
-67	0514027-1	SCREW ASSEMBLY-VERTICAL ADJUST WEU 0514027-5	1	D
	0514027-5 **	SCREW ASSEMBLY-VERTICAL ADJUST	1	E
-68	NAS561P4-10	ROLL PIN-PILOT SEAT	1	
	NAS561P4-10	ROLL PIN-CO-PILOT SEAT	2	
-69	0514037-1	NUT-SEAT ADJUST	1	
		ATTACHING PARTS		
-70	MS20392-2C37	PIN	1	
-71	AN960-10	WASHER	1	
-72	MS24665-132	PIN-COTTER	1	
		---*---		
-73	0700113-1	KNOB-SEAT ADJUST	1	
		ATTACHING PARTS		
-74	S1021Z6-8	SCREW	1	
		---*---		
-75	0514047-1	ARM ASSEMBLY-CO-PILOT SEAT ADJUST	1	
	0514047-9	ARM ASSEMBLY-PILOT SEAT ADJUST	1	
		ATTACHING PARTS		
-76	MS20392-2C83	PIN CO-PILOT SEAT	1	
	MS20392-2C45	PIN PILOT SEAT	1	
-77	AN960-10L	WASHER	1	
-78	MS24665-132	PIN-COTTER	1	
		---*---		
-79	1414104-56	CLAMP USED ON CO-PILOT SEAT ONLY	2	
-80	MS20392-1C15	PIN-CO-PILOT SEAT	1	
	MS20392-1C15	PIN-PILOT SEAT	1	
-81	MS24665-132	PIN-COTTER CO-PILOT SEAT	1	
-82	NAS561-3-16	ROLL PIN	1	
-83	1714067-2	PIN-CO-PILOT SEAT ADJUST	1	
	1714067-4	PIN-PILOT SEAT ADJUST	1	
-84	1714061-1	GUIDE	2	
		ATTACHING PARTS		
-85	AN515-8R6	SCREW	2	
	NAS679A08	NUT	1	
		---*---		
-86	1414116-1	SPRING	4	
-87	1714000-33	HOUSING ASSEMBLY-ROLLER	2	
		ATTACHING PARTS		
-88	NAS220-11	SCREW	2	
	AN960-8	WASHER	2	
	NAS679A08	NUT	4	
		---*---		
-89	1714000-200	KIT-SEAT ROLLER	1	
		ATTACHING PARTS		
-90	AN23-20A	SCREW	1	
-91	1414104-54	BUSHING	1	
-92	AN960-10L	WASHER	1	
-93	S1914-8	NUT	2	
		---*---		
-94	0514048-1 #	HEADREST ASSEMBLY	1	
-95	0514048-9 #	COVER-HEADREST	2	B
-96	S1746W2	BELT ASSEMBLY-FRONT SEAT	2	C
	S2070W103 *Z	BELT ASSEMBLY-FRONT SEAT		
		ATTACHING PARTS		
-97	AN4-5A	BOLT	2	
-98	NAS43HT4-12	SPACER	2	
-98A	AN960-416	WASHER	3	
-99	NAS679A4	NUT OUTBOARD FITTINGS ONLY	1	
		---*---		

CONTINUED ON NEXT PAGE

FIGURE AND INDEX NO.	PART NUMBER	DESCRIPTION 1 2 3 4 5 6 7	UNITS PER ASSY	USABLE ON CODE
63C-99A	0510205-5	FITTING-SEAT BELT LH OUTBOARD & RH INBOARD ----------	2	
	0510205-6	FITTING-SEAT BELT RH OUTBOARD & LH INBOARD ----------	2	
		ATTACHING PARTS		
-99B	AN3-4A	BOLT INBOARD FITTINGS ONLY ----------	2	
	AN3-5A	BOLT OUTBOARD FITTINGS ONLY ----------	2	
-99C	AN970-3	WASHER UNDER FORWARD NUT ONLY ----------	1	
-99D	MS21044N3	NUT ----------	2	
		---*---		
		NOTE. ØTHIS PART NUMBER MUST HAVE A SECOND DASH NUMBER ADDED TO DENOTE COLOR. REFER TO HOW TO ORDER UPHOLSTERED PARTS-PAGE XII.		
		NOTE. ¤THIS PART NUMBER MUST HAVE A SECOND DASH NUMBER ADDED TO DENOTE COLOR. REFER TO HOW TO ORDER INTERIOR PARTS-PAGE XIII.		
		NOTE. **WHEN INITIALLY ORDERING THIS PART FOR AIRCRAFT PRIOR TO SERIALS 18052195 & 18501876 ALSO ORDER ONE S2013-2 BEARING & TWO S2014-2 RACE.		
		NOTE. %SEE FIGURE 70 FOR SHOULDER HARNESS INSTL.		
		NOTE. *WHEN ORDERING SEAT BELT FOR AUSTRAILIAN AIRCRAFT ADD VH TO PART NUMBER. EXAMPLE S2070W103VH.		
		A---SERIAL 18501600 THRU 18502310		
		SERIAL 18052104 THRU 18052384		
		B---SERIAL 18501600 THRU 18501832		
		SERIAL 18052104 THRU 18052175		
		C---SERIAL 18501833 THRU 18502310		
		SERIAL 18052176 THRU 18052384		
		D---SERIAL 18501600 THRU 18501875		
		SERIAL 18052104 THRU 18052194		
		E---SERIAL 18501876 THRU 18502310		
		SERIAL 18052195 THRU 18052195		
		F---SERIAL 18501600 THRU 18501934		
		SERIAL 18052104 THRU 18052222		
		G---SERIAL 18501876 THRU 18501934		
		SERIAL 18052195 THRU 18052222		
		H---SERIAL 18501935 THRU 18502310		
		SERIAL 18052223 THRU 18052195		
		J---SERIAL 18501600 THRU 18502090		
		SERIAL 18052104 THRU 18052284		
		K---SERIAL 18502091 THRU 18502310		
		SERIAL 18052285 THRU 18052195		

Rear Seat

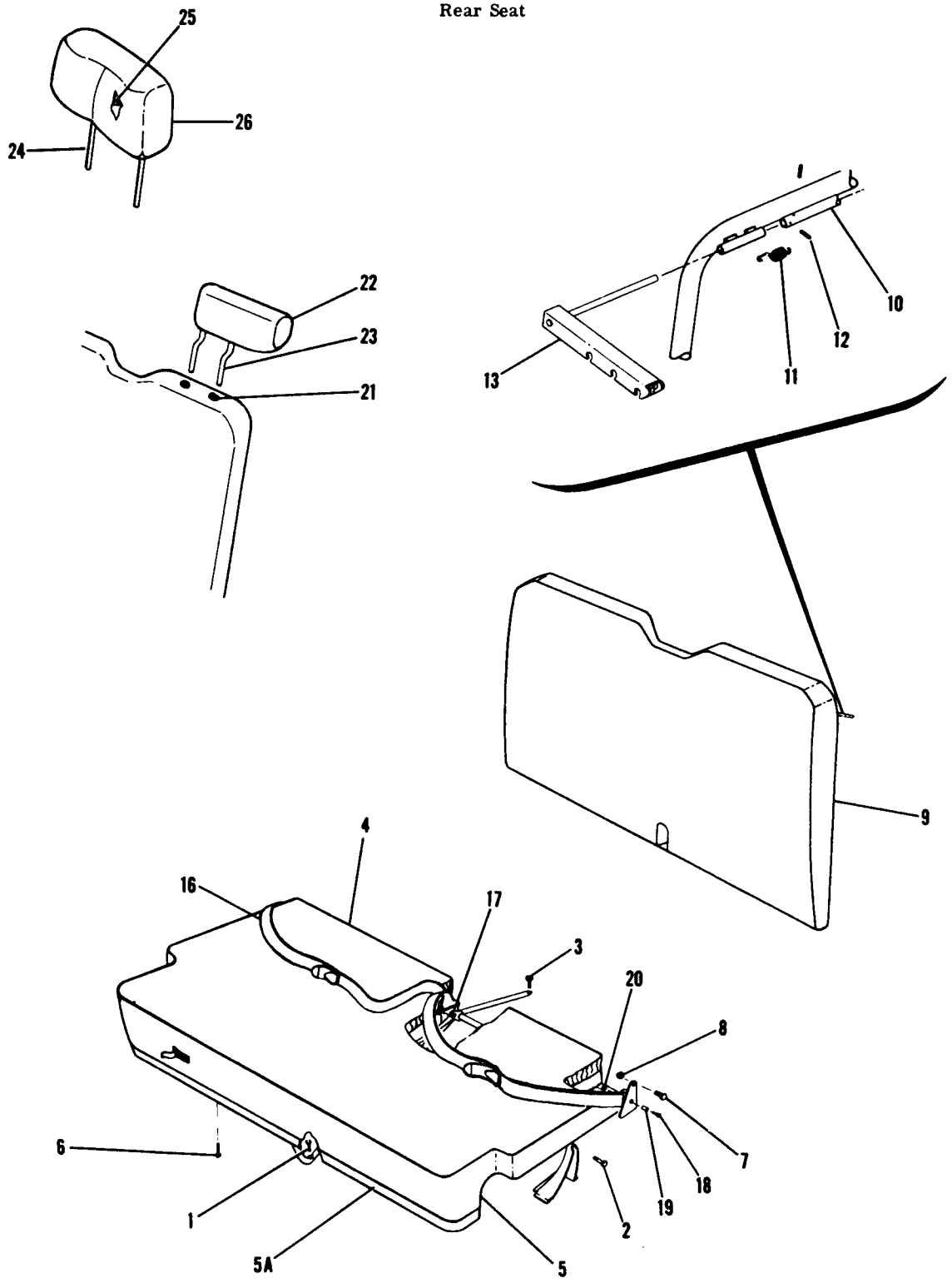

SERIAL 185-0001 THRU 185-1599
SERIAL 18051184 THRU 18052103

Figure 64. Rear Seat Installation

FIGURE AND INDEX NO.	PART NUMBER	DESCRIPTION 1 2 3 4 5 6 7	UNITS PER ASSY	USABLE ON CODE
			NP	K
64 -		SEAT INSTALLATION-REAR	1	
		CUSHION ASSEMBLY-REAR SEAT FSO 0715018-2 SEE FIG 64A-		
		ATTACHING PARTS	1	
- 1	AN3-11A	BOLT	2	
- 2	AN4-11A	BOLT	1	
- 3	AN4-6A	BOLT		
		---*---	1	
- 4	0700105-11 #	COVER ASSEMBLY-REAR SEAT CUSHION DELUXE UPHOLSTERY	1	
	0700105-465 #	COVER ASSEMBLY-REAR SEAT CUSHION UTILITY UPHOLSTERY	1	
- 5	0511174-1	RETAINER-REAR SEAT UPHOLSTERY	1	E
- 5A	0700126-1	RETAINER-REAR SEAT UPHOLSTERY		
		ATTACHING PARTS	6	
- 6	S1021Z6-4	SCREW		
		---*---	1	C
		BACK ASSEMBLY-REAR SEAT FSO 0715018-1 SEE FIG 64A	1	D
	0700105-462 #	BACK ASSEMBLY-REAR SEAT UTILITY UPHOLSTERY	1	D
	0700105-351 #	BACK ASSEMBLY-REAR SEAT DELUXE UPHOLSTERY		
		ATTACHING PARTS	2	
- 7	AN4-26A	BOLT	2	
- 8	NAS679A4	NUT		
		---*---	1	C
- 9	0700105-457 #	COVER ASSEMBLY-REAR SEAT BACK DELUXE UPHOLSTERY	1	C
	0700105-417 #	COVER ASSEMBLY-REAR SEAT BACK UTILITY UPHOLSTERY	1	D
	0700105-10 #	COVER ASSEMBLY-REAR SEAT BACK	1	
-10	0411623-1	LATCH-SEAT BACK	1	
-11	0511049	SPRING-LATCH LH	1	
	0511049-1	SPRING-LATCH RH		
		ATTACHING PARTS	1	
-12	59-022-044-375	PIN-ROLL EN		
		---*---	1	
-13	0511284-3	LATCH ASSEMBLY-REAR SEAT LH	1	
	0511284-4	LATCH ASSEMBLY-REAR SEAT RH		
-14		DELETED, NOT AVAILABLE		
-15		DELETED, NOT AVAILABLE		
-16	S1060-1	BELT ASSEMBLY-SEAT BLACK	2	A
	S1060-14	BELT ASSEMBLY-SEAT BEIGE	2	B
	S1618D1	BELT ASSEMBLY-SEAT TAN	2	F
	S1746D1	BELT ASSEMBLY-SEAT TAN	2	J
		ATTACHING PARTS	1	C
-17	AN4-12A	BOLT	1	D
	AN4-11A	BOLT	1	
	NAS43HT4-47	SPACER	1	
	NAS679A4	NUT	1	C
	AN960-416	WASHER	1	
-18	AN4-6A	BOLT	1	
-19	NAS43HT4-20	SPACER	1	
-20	NAS679A4	NUT		
		---*---	4	
-21	0700320-1	RETAINER-REAR SEAT HEADREST		

CONTINUED ON NEXT PAGE

FIGURE AND INDEX NO.	PART NUMBER	DESCRIPTION 1 2 3 4 5 6 7	UNITS PER ASSY	USABLE ON CODE
64 -22	1200103-3	HEADREST ASSEMBLY-REAR SEAT LH	1	G
	1200103-4	HEADREST ASSEMBLY-REAR SEAT RH	1	G
-23	1200103-5	FRAME-REAR SEAT HEADREST	2	G
	1414252-1 #	HEADREST ASSEMBLY	2	H
	1714040-1 #	HEADREST ASSEMBLY	2	J
-24	1414252-2	FRAME-HEADREST	1	E
-25	1414252-7	CUSHION-HEADREST	1	H
	1714035-1	CUSHION-HEADREST	1	J
-26	1414252-6 #	COVER-HEADREST	1	H
	1714040-2 #	COVER-HEADREST	1	J

NOTE. #THIS PART NUMBER MUST HAVE A SECOND DASH NUMBER ADDED TO DENOTE COLOR. REFER TO HOW TO ORDER UPHOLSTERED PARTS-PAGE XII.

A---SERIAL 185-0001 THRU 185-0237,
SERIAL 185-0777 THRU 185-0967
SERIAL 18051446 THRU 18051607
B---SERIAL 185-0238 THRU 185-0776
SERIAL 18051184 THRU 18051445
C---SERIAL 185-0001 THRU 185-1599
D---SERIAL 18051184 THRU 18052103
E---SERIAL 185-0513 THRU 185-1599
SERIAL 18051184 THRU 18052103
F---SERIAL 185-0968 THRU 185-1300
SERIAL 18051608 THRU 18051875
G---SERIAL 185-0001 THRU 185-0512
H---SERIAL 185-0513 THRU 185-1300
SERIAL 18051184 THRU 18051875
J---SERIAL 185-1301 THRU 185-1599
SERIAL 18051876 THRU 18052103
K---SERIAL 185-0001 THRU 185-1599
SERIAL 18051184 THRU 18052103

Seat (Cont)

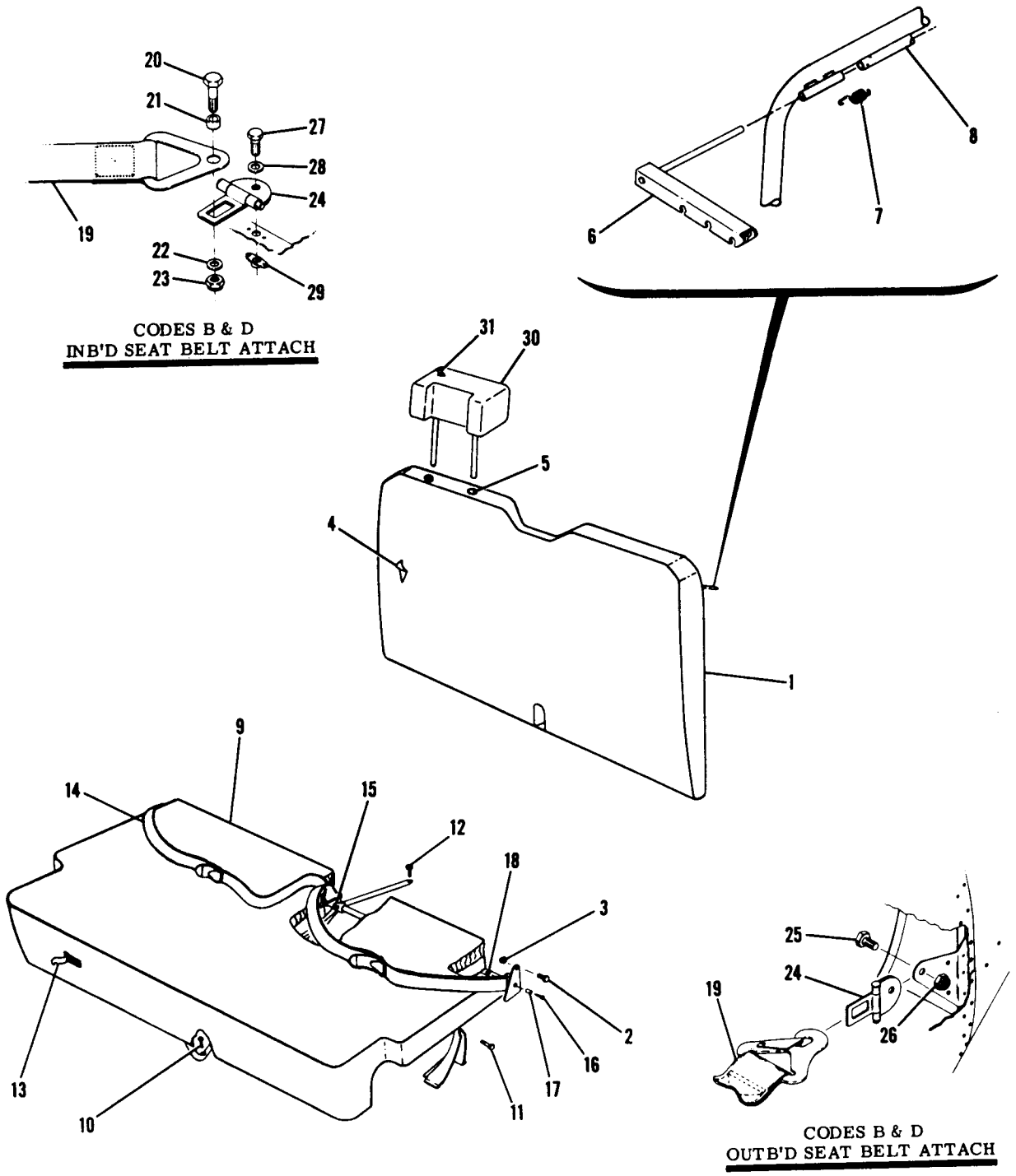

SERIAL 18501600 THRU 18502310
SERIAL 18052104 THRU 18052384

Figure 64A. Rear Seat Installation

FIGURE AND INDEX NO.	PART NUMBER		DESCRIPTION 1 2 3 4 5 6 7	UNITS PER ASSY	USABLE ON CODE
64A-			SEAT INSTALLATION-REAR	NP	A
- 1	0715018-1	#	SEAT BACK ASSEMBLY-UPHOLSTERED	1	
			ATTACHING PARTS		
- 2	AN4-26A		BOLT	2	
- 3	NAS679A4		NUT	2	
			---*---		
- 4	0715018-7	#	COVER ASSEMBLY-SEAT BACK	1	
- 5	0700320-1		RETAINER-HEADREST	4	
- 6	0511284-3		LATCH ASSEMBLY-LH	1	
	0511284-4		LATCH ASSEMBLY-RH	1	
- 7	0511049		SPRING-LATCH LH	1	
	0511049-1		SPRING-LATCH RH	1	
- 8	0411623-1		LATCH-SEAT BACK	1	
- 9	0715018-2	#	SEAT BOTTOM ASSEMBLY-UPHOLSTERED	1	
			ATTACHING PARTS		
-10	AN3-11A		BOLT	2	
-11	AN4-11A		BOLT	1	
-12	AN4-6A		BOLT	1	
			---*---		
-13	0715018-10	#	COVER ASSEMBLY-SEAT BOTTOM	2	C
-14	S1746W1		BELT ASSEMBLY-SEAT	1	C
			ATTACHING PARTS		
-15	AN4-11A		BOLT	1	C
	NAS43HT4-47		SPACER	1	C
	NAS679A4		NUT	1	C
-16	AN4-6A		BOLT	1	C
-17	NAS43HT4-20		SPACER	1	C
-18	NAS679A4		NUT	1	C
			---*---		
-19	S1746W35		BELT ASSEMBLY-SEAT	2	D
	S2070W112	%*	BELT ASSEMBLY-SEAT	2	B
			ATTACHING PARTS		
-20	AN4-6A		BOLT	1	
-21	NAS43HT4-11		SPACER	1	
-22	AN960-416L		WASHER	1	
-23	NAS679A4		NUT	1	
			---*---		
-24	0711083-1		LATCH ASSEMBLY-SEAT BELT	4	B
			ATTACHING PARTS		
-25	AN4-5A		BOLT	1	B
-26	NAS679A4		NUT	1	B
-27	AN4-6A		BOLT	1	B
-28	S1074-1		WASHER	1	B
-29	NAS696A4		NUTPLATE	1	B
			---*---		
-30	0514048-1	#	HEADREST ASSEMBLY	2	
-31	0514048-9	#	COVER-HEADREST	1	

NOTE. #THIS PART NUMBER MUST HAVE A SECOND DASH NUMBER ADDED TO DENOTE COLOR. REFER TO HOW TO ORDER UPHOLSTERED PARTS-PAGE XII.

NOTE. *USED ON AIRCRAFT EQUIPPED WITH SHOULDER HARNESS. SEE FIGURE 70 FOR SHOULDER HARNESS.

NOTE. %WHEN ORDERING SEAT BELT FOR AUSTRALIAN AIRCRAFT ADD VH TO PART NUMBER. EXAMPLE S2070W112VH.

A---SERIAL 18501600 THRU 18502310
SERIAL 18052104 THRU 18052384
B---SERIAL 18501833 THRU 18502310
SERIAL 18052176 THRU 18052384
C---SERIAL 18501600 THRU 18507870
SERIAL 18052104 THRU 18052197
D---SERIAL 18501871 THRU 18502310
SERIAL 18052198 THRU 18052384

Stowable Seats

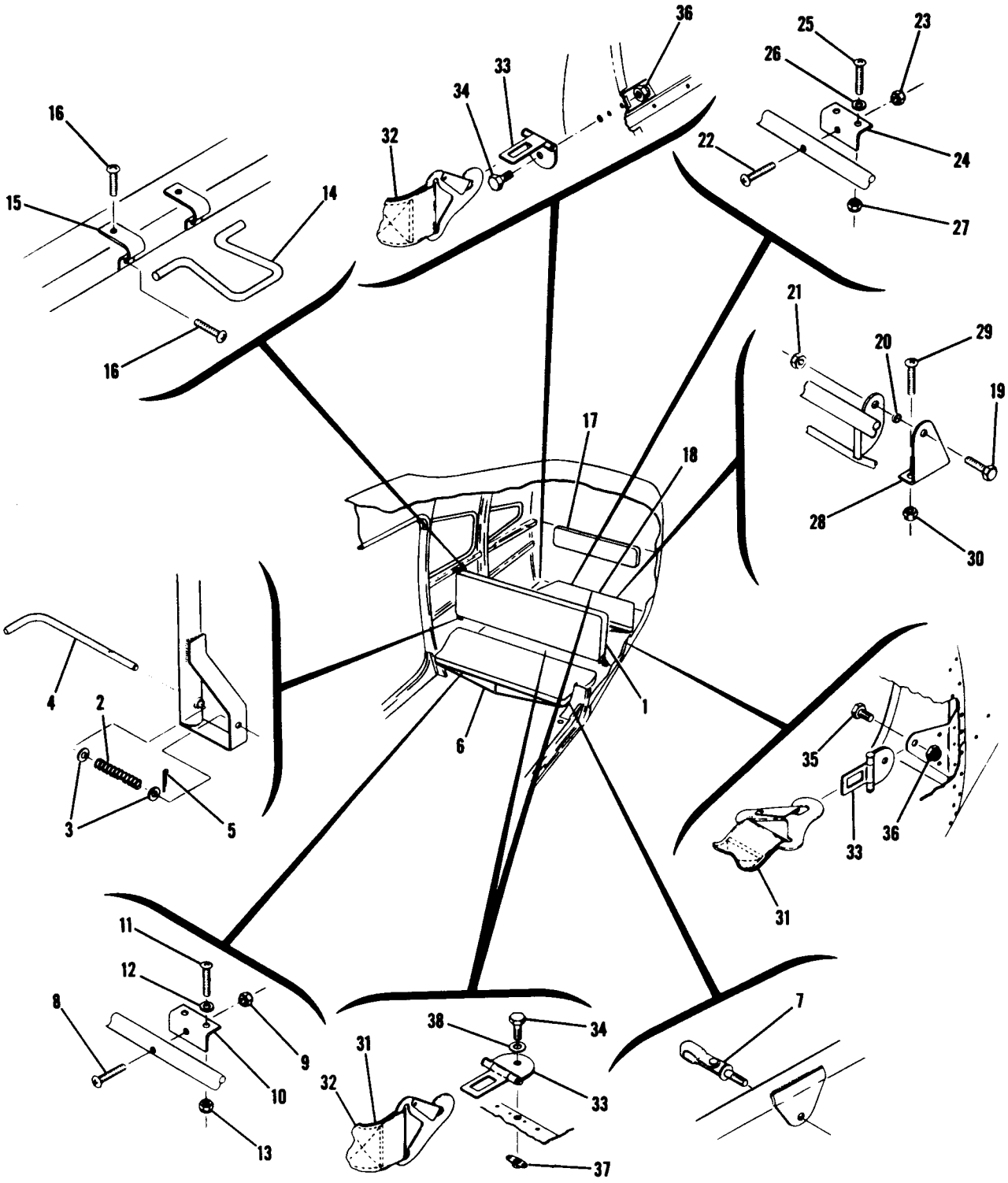

SERIAL 185-0001 THRU 18502310
SERIAL 18051313 THRU 18052384

Figure 65. Stowable Rear Seats Installation

FIGURE AND INDEX NO.	PART NUMBER	DESCRIPTION 1 2 3 4 5 6 7	UNITS PER ASSY	USABLE ON CODE
65 -		SEATS INSTALLATION-STOWABLE REAR	NP	C
- 1	0711094-4 #	BACK ASSEMBLY-CENTER SEAT	1	E
	0711094-11 #	CUSHION ASSEMBLY-CENTER SEAT BACK	1	E
		ATTACHING PARTS		
	AN520-10R22	SCREW	2	E
	AN520-10R16	SCREW	2	E
		---*---		
- 2	0711129-3	SPRING	1	E
- 3	AN960-10	WASHER	2	E
- 4	0711129-2	HANDLE	1	E
- 5	MS24665-132	PIN-COTTER	1	E
- 6	0711094-3 #	BOTTOM ASSEMBLY-CENTER SEAT	1	E
		ATTACHING PARTS		
- 7	0711122-1	EYEBOLT	4	E
		---*---		
	0711094-5 #	CUSHION ASSEMBLY-CENTER SEAT BOTTOM	1	E
		ATTACHING PARTS		
- 8	AN515-8R18	SCREW	4	E
- 9	NAS679A08	NUT	4	E
		---*---		
-10	0711098-2	CLIP	4	E
		ATTACHING PARTS		
-11	AN515-8R10	SCREW	2	E
-12	AN960-8	WASHER	2	E
-13	NAS679A08	NUT	2	E
		---*---		
-14	0711128-1	SUPPORT-CENTER SEAT BACK	2	E
-15	0711129-4	CLAMP	4	E
-16	AN520-10R7	SCREW	2	E
	SEE FIG 65A	SEAT ASSEMBLY-DIVIDED MIDDLE	2	F
-17	0711080-1 #	BACK REST ASSEMBLY-REAR SEAT	1	
-18	0711097-5 #	BOTTOM ASSEMBLY-REAR SEAT	1	H
	0711097-28 #	BOTTOM ASSEMBLY-REAR SEAT	1	J
		ATTACHING PARTS		
-19	AN3-4A	BOLT	2	
-20	NAS43HT3-6	SPACER	2	
-21	MS21044N3	NUT	2	
		---*---		
	0711097-21	STRAP ASSEMBLY-UP POSITION	1	
		ATTACHING PARTS		
	AN545-6R3	SCREW	1	
		---*---		
	0711097-4 #	CUSHION ASSEMBLY	1	H
	0711097-25 #	CUSHION ASSEMBLY	1	J
		ATTACHING PARTS		
-22	AN516-8R14	SCREW	4	
-23	NAS679A08	NUT	4	
		---*---		
-24	0711098-2	CLIP	4	
		ATTACHING PARTS		
-25	AN515-8R10	SCREW	2	
-26	AN960-8	WASHER	2	
-27	NAS679A08	NUT	2	
		---*---		
-28	0711098-3	HINGE-REAR SEAT BOTTOM LH	1	K
	0711098-5	HINGE-REAR SEAT BOTTOM LH	1	L
	0711098-4	HINGE-REAR SEAT BOTTOM RH	1	K
	0711098-6	HINGE-REAR SEAT BOTTOM RH	1	L
		ATTACHING PARTS		
-29	AN515-8R8	SCREW	2	
-30	NAS679A08	NUT	2	
		---*---		
-31	S1620B5	BELT ASSEMBLY-CENTER SEAT BLACK	2	A
	S1243-5	BELT ASSEMBLY-CENTER SEAT BEIGE	2	B
	S1620D5	BELT ASSEMBLY-CENTER SEAT TAN	2	M
	SEE FIG 65A	BELT ASSEMBLY-CENTER SEAT	2	F
-32	S1620B2	BELT ASSEMBLY-REAR SEAT BLACK	2	A
	S1243-4	BELT ASSEMBLY-REAR SEAT BEIGE	2	B
	S1620D2	BELT ASSEMBLY-REAR SEAT TAN	2	D
	S1746D36	BELT ASSEMBLY-REAR SEAT TAN	2	G
	S1746W36	BELT ASSEMBLY-REAR SEAT CLOVE BROWN	2	R
	S2070W118 %*	BELT ASSEMBLY-REAR SEAT CLOVE BROWN	2	Q

CONTINUED ON NEXT PAGE

FIGURE AND INDEX NO.	PART NUMBER	DESCRIPTION 1 2 3 4 5 6 7	UNITS PER ASSY	USABLE ON CODE
65 -33	0711083-1	LATCH ASSEMBLY-SEAT BELT	6	E
	0711083-1	LATCH ASSEMBLY-SEAT BELT	3	P
	0711083-1	LATCH ASSEMBLY-SEAT BELT	4	Q
		ATTACHING PARTS		
-34	AN4-6A	BOLT	1	
-35	AN4-5A	BOLT	1	
-36	NAS679A4	NUT	1	
-37	NAS697A4	NUTPLATE	1	N
	NAS696A4	NUTPLATE	1	Q
-38	S1074-1	WASHER	1	
		---*---		

NOTE. *THIS PART NUMBER MUST HAVE A SECOND DASH NUMBER ADDED TO DENOTE COLOR. REFER TO HOW TO ORDER UPHOLSTERED PARTS-PAGE XII.

NOTE. *USED ON AIRCRAFT EQUIPPED WITH SHOULDER HARNESS. SEE FIGURE 70 FOR SHOULDER HARNESS.

NOTE. %WHEN ORDERING SEAT BELT FOR AUSTRALIAN AIRCRAFT ADD VH TO PART NUMBER. EXAMPLE S2070W118VH.

A---SERIAL 185-0001 THRU 185-0237,
SERIAL 185-0777 THRU 185-0967
SERIAL 18051446 THRU 18051607
B---SERIAL 185-0238 THRU 185-0776
SERIAL 18051313 THRU 18051445
C---SERIAL 185-0001 THRU 18502310
SERIAL 18051313 THRU 18052384
D---SERIAL 185-0968 THRU 185-1300
SERIAL 18051608 THRU 18051875
E---SERIAL 185-0001 THRU 185-1149
SERIAL 18051313 THRU 18051774
F---SERIAL 185-1150 THRU 18502310
SERIAL 18051775 THRU 18052384
G---SERIAL 185-1301 THRU 185-1599
SERIAL 18051876 THRU 18052103
H---SERIAL 185-0001 THRU 185-1447
SERIAL 18051313 THRU 18051993
J---SERIAL 185-1448 THRU 18502310
SERIAL 18051994 THRU 18052384
K---SERIAL 185-0001 THRU 185-0004, 185-0006,
185-0008 & 185-0009
L---SERIAL 185-0005, 185-0007, 185-0010 THRU 18502310
SERIAL 18051313 THRU 18052384
M---SERIAL 185-0968 THRU 185-1149
SERIAL 18051608 THRU 18051774
N---SERIAL 185-0001 THRU 18501832
SERIAL 18051313 THRU 18052175
P---SERIAL 185-1150 THRU 18501832
SERIAL 18051775 THRU 18052175
Q---SERIAL 18501833 THRU 18502310
SERIAL 18052176 THRU 18052384
R---SERIAL 18501600 THRU 18502310
SERIAL 18052104 THRU 18052384

Stowable Seats (Cont)

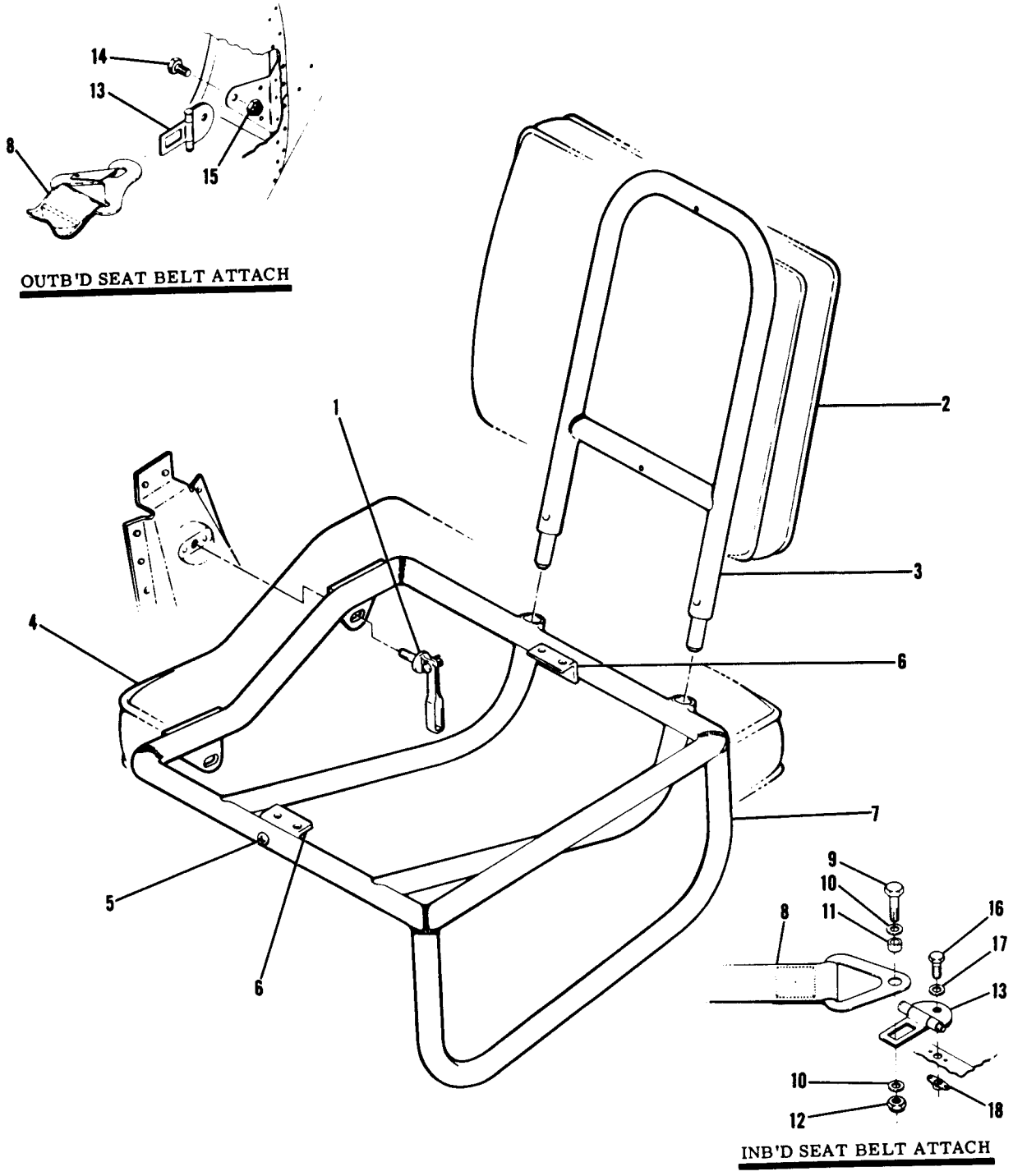

SERIAL 185-1150 THRU 18502310
SERIAL 18051775 THRU 18052384

Figure 65A. Divided Middle Seat Assembly

FIGURE AND INDEX NO.	PART NUMBER		DESCRIPTION 1 2 3 4 5 6 7	UNITS PER ASSY	USABLE ON CODE
65A-			DIVIDED MIDDLE SEAT ASSEMBLY	NP	A
			ATTACHING PARTS	2	
- 1	0711122-1		EYEBOLT	2	B
			---*---		
- 2	0711702-16	#	CUSHION ASSEMBLY-SEAT BACK	2	C
	0711702-29	#	CUSHION ASSEMBLY-SEAT BACK		
			ATTACHING PARTS	2	
	AN520-10R16		SCREW	2	
	SS58310		NUT UC		
			---*---	2	
- 3	0711702-20	¤	FRAME ASSEMBLY-SEAT BACK	1	
- 4	0711702-8	#	CUSHION ASSEMBLY-SEAT BOTTOM RH	1	
	0711702-7	#	CUSHION ASSEMBLY-SEAT BOTTOM LH		
			ATTACHING PARTS	2	
- 5	AN515-8R18		SCREW	2	
	AN960-8L		WASHER	2	
	NAS679A08		NUT		
			---*---	2	
- 6	0711098-2		CLIP-SEAT CUSHION		
			ATTACHING PARTS	2	
	AN515-8R10		SCREW	2	
	AN960-8L		WASHER	2	
	NAS679A08		NUT		
			---*---	1	
- 7	0711702-6	¤	FRAME ASSEMBLY-SEAT BOTTOM RH	1	
	0711702-5	¤	FRAME ASSEMBLY-SEAT BOTTOM LH	2	B
- 8	S1620D5		BELT ASSEMBLY-MIDDLE SEAT TAN	2	D
	S174608		BELT ASSEMBLY-MIDDLE SEAT TAN	2	E
	S1746W27		BELT ASSEMBLY-MIDDLE SEAT CLOVE BROWN	2	G
	S2070W112	*	BELT ASSEMBLY-MIDDLE SEAT CLOVE BROWN	1	F
- 9	AN4-7A		BOLT	2	G
	AN4-6A		BOLT	2	E
-10	A960-416L		WASHER	2	E
-11	NAS43HT4-11		SPACER	1	F
-12	NAS679A4		NUT	2	G
	NAS679A4		NUT	3	H
-13	0711083-1		LATCH ASSEMBLY-SEAT BELT	4	G
	0711083-1		LATCH ASSEMBLY-SEAT BELT		
			ATTACHING PARTS	1	
-14	AN4-5A		BOLT	1	
-15	NAS679A4		NUT	1	
-16	AN4-6A		BOLT	1	
-17	S1074-1		WASHER	1	H
-18	NAS697A4		NUTPLATE	1	G
	NAS696A4		NUTPLATE		
			---*---		

NOTE. #THIS PART NUMBER MUST HAVE A SECOND DASH NUMBER ADDED TO DENOTE COLOR. REFER TO HOW TO ORDER UPHOLSTERED PARTS-PAGE XII.

NOTE. ¤THIS PART NUMBER MUST HAVE A SECOND DASH NUMBER ADDED TO DENOTE COLOR. REFER TO HOW TO ORDER INTERIOR PARTS-PAGE XIII.

NOTE. *USED ON AIRCRAFT EQUIPPED WITH SHOULDER HARNESS. SEE FIGURE 70 FOR SHOULDER HARNESS. WHEN ORDERING SEAT BELT FOR AUSTRALIAN AIRCRAFT ADD VH TO PART NUMBER. EXAMPLE S2070W112VH.

A---SERIAL 185-1150 THRU 18502310
SERIAL 18051775 THRU 18052384
B---SERIAL 185-1150 THRU 185-1300
SERIAL 18051775 THRU 18051875
C---SERIAL 185-1301 THRU 18502310
SERIAL 18051876 THRU 18052384
D---SERIAL 185-1301 THRU 185-1599
SERIAL 18051876 THRU 18052103
E---SERIAL 18501600 THRU 18502310
SERIAL 18052104 THRU 18052384
F---SERIAL 18501600 THRU 18501832
SERIAL 18052104 THRU 18052175
G---SERIAL 18501833 THRU 18502310
SERIAL 18052176 THRU 18052384
H---SERIAL 185-1150 THRU 18501832
SERIAL 18051775 THRU 18052175

Seat (Cont)

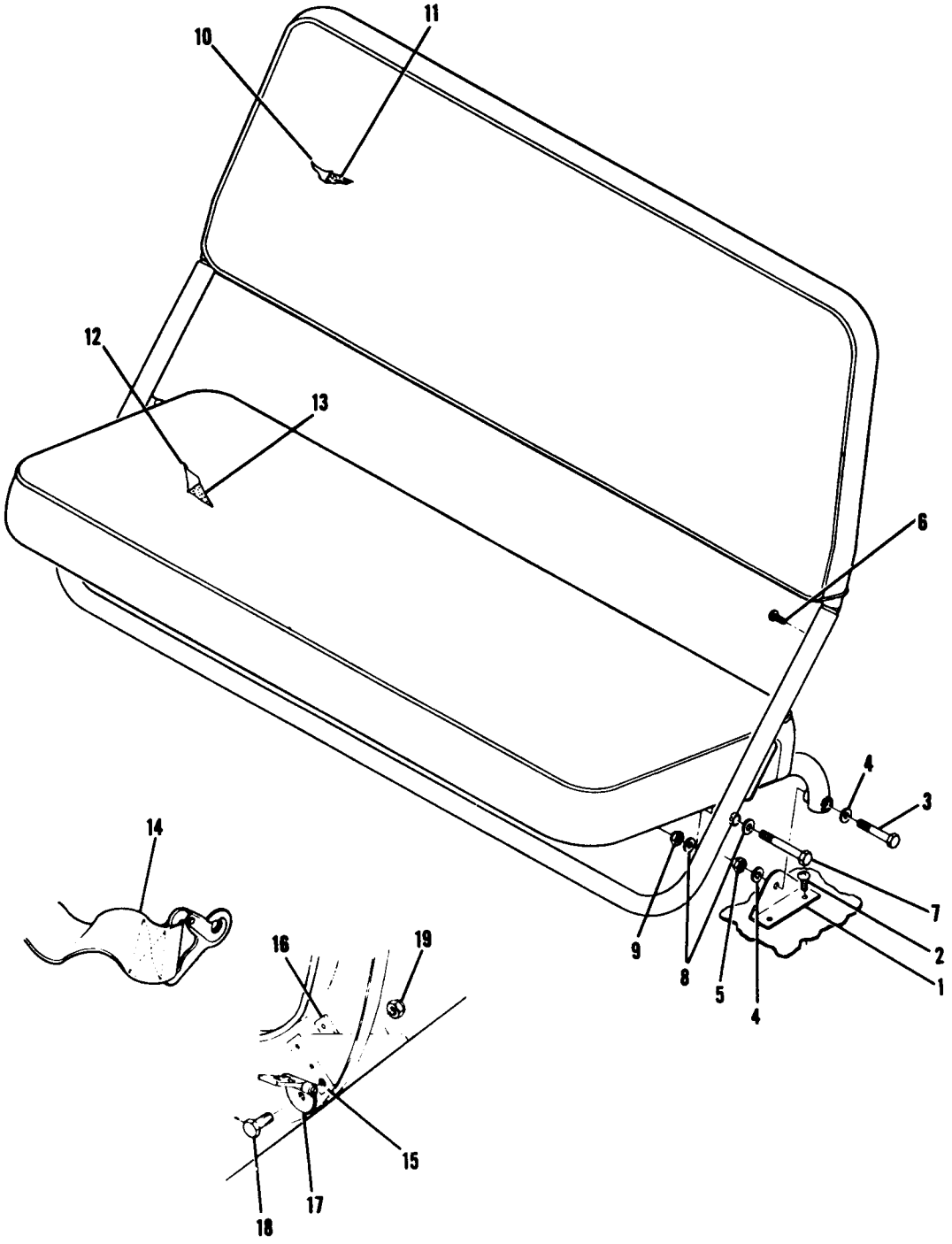

SERIAL 18501600 THRU 18502310
SERIAL 18052104 THRU 18052384

Figure 65B. Child Seat Installation

FIGURE AND INDEX NO.	PART NUMBER	DESCRIPTION 1 2 3 4 5 6 7	UNITS PER ASSY	USABLE ON CODE
658-		CHILD SEAT INSTALLATION	NP	A
	0515002-2 *	SEAT ASSEMBLY-CHILD	1	
		ATTACHING PARTS		
- 1	0514042-1	BRACKET-SEAT MOUNTING	2	
- 2	AN515-8R8	SCREW	4	
- 3	AN4-13A	BOLT	2	
- 4	AN960-416	WASHER	4	
- 5	NAS679A4	NUT	2	
		---*---		
- 6	S1021Z8-8C	SCREW	2	
- 7	AN4-17A	BOLT	2	
- 8	AN960-416	WASHER	4	
- 9	NAS679A4	NUT	2	
-10	0515002-3 *	COVER ASSEMBLY-SEAT BACK	1	
-11	0515002-9	CUSHION-SEAT BACK	1	
-12	0515002-5 *	COVER ASSEMBLY-SEAT BOTTOM	1	
-13	0515002-10	CUSHION-SEAT BOTTOM	1	
-14	S1746W5	BELT ASSEMBLY-SAFETY	2	B
-15	0712008-1	BRACKET-SEAT BELT	2	C
	0712008-2	BRACKET-SEAT BELT	2	
-16	0712009-1	SPACER-SUPPORT	2	
-17	0711083-1	LATCH ASSEMBLY	1	
		ATTACHING PARTS		
-18	AN4-6A	BOLT	1	
-19	NAS679A4	NUT	1	
		---*---		

NOTE. *THIS PART NUMBER MUST HAVE A SECOND DASH NUMBER ADDED TO DENOTE COLOR. REFER TO HOW TO ORDER UPHOLSTERED PARTS-PAGE XII.

A---SERIAL 18501600 THRU 18502310
SERIAL 18052104 THRU 18052384
B---SERIAL 18501600 THRU 18501832
SERIAL 18052104 THRU 18052175
C---SERIAL 18501833 THRU 18502310
SERIAL 18052176 THRU 18052384

Auxiliary Seat

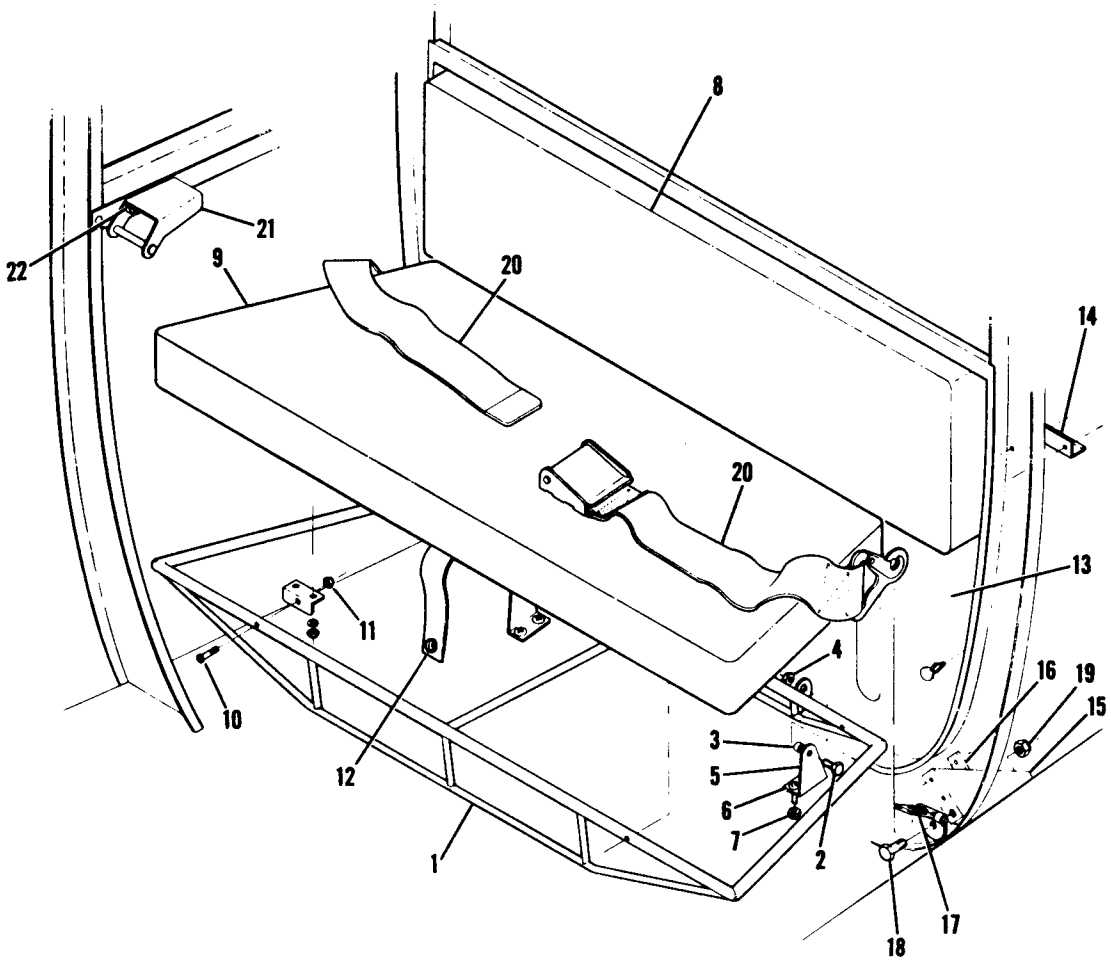

SERIAL 18051184 THRU 18051312

Figure 66. Auxilliary Seat Installation

FIGURE AND INDEX NO.	PART NUMBER	DESCRIPTION 1 2 3 4 5 6 7	UNITS PER ASSY	USABLE ON CODE
66 -		SEAT INSTALLATION-AUXILIARY	NP	A
- 1	0711097-2	FRAME ASSEMBLY	1	
		ATTACHING PARTS		
- 2	AN3-4A	BOLT	2	
- 3	NAS43HT3-6	SPACER	2	
- 4	NAS679A4	NUT	2	
		---*---		
- 5	0711098-3	HINGE-FLOOR FITTING LH	1	
	0711098-4	HINGE-FLOOR FITTING RH	1	
		ATTACHING PARTS		
- 6	AN515-8R8	SCREW	2	
- 7	NAS679A08	NUT	2	
		---*---		
- 8	0711080-1	BACKREST ASSEMBLY	1	
	AN227-7	SOCKET	5	
	AN227-6	BUTTON	5	
- 9	0711097-4	CUSHION ASSEMBLY	1	
		ATTACHING PARTS		
-10	AN515-8R14	SCREW	4	
-11	NAS679A08	NUT	4	
		---*---		
-12	0711097-21	STRAP ASSEMBLY	1	
-13	0711079-1	TRAY ASSEMBLY	1	
		ATTACHING PARTS		
	49265F938	STUD UC	4	
		---*---		
-14	0710011-1	ANGLE	1	
-15	0712008-1	BRACKET	2	
-16	0712009-1	SPACER	2	
-17	0711083-1	LATCH ASSEMBLY	2	
		ATTACHING PARTS		
-18	AN4-6A	BOLT	1	
-19	NAS679A4	NUT	1	
		---*---		
-20	S1243-6	BELT ASSEMBLY-SAFETY	1	
-21	0511286	LATCH ASSEMBLY-REAR SEAT BACK	1	
		ATTACHING PARTS		
-22	AN3-3A	BOLT	2	
		---*---		
		A---SERIAL 18051184 THRU 18051312		

Instruments (Cont)

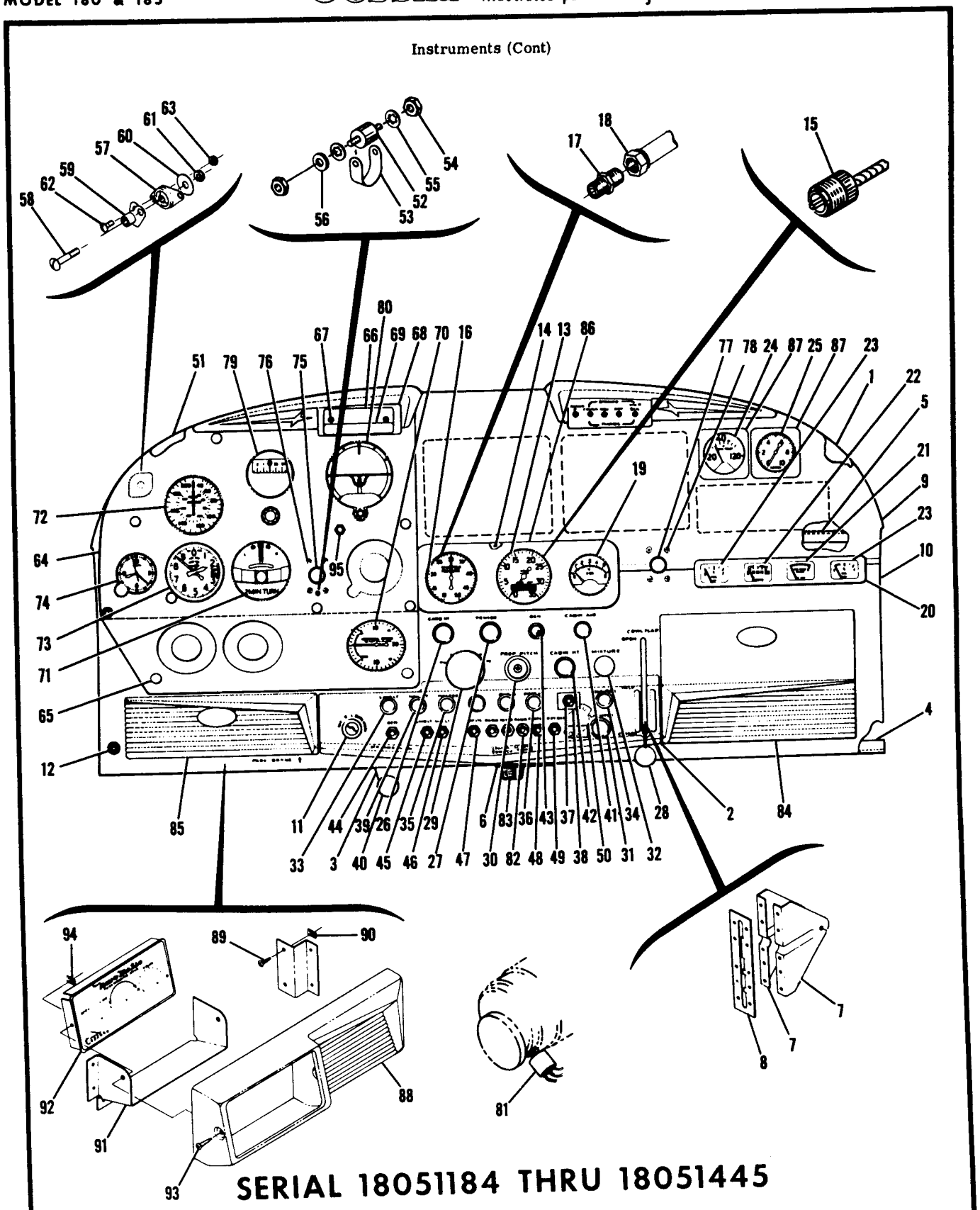

Figure 67. Instrument Panel Equipment Installation and Assembly

FIGURE AND INDEX NO.	PART NUMBER		DESCRIPTION 1 2 3 4 5 6 7	UNITS PER ASSY	USABLE ON CODE
67 -			EQUIPMENT INSTALLATION & ASSEMBLY-INSTRUMENT PANEL	NP	A
- 1	0713185-1	*	PANEL ASSEMBLY-STATIONARY	1	
- 2	0713126-1		PAN	1	
- 3	0756001-13		SUPPORT-STRAINER DRAIN CONTROL	1	
- 4	0713501-4		STIFFENER	1	
- 5	0713501-5		STIFFENER	1	
- 6	0413131-3		BRACKET-RHEOSTAT	2	
- 7	0713127-1		BRACKET-FLAP CONTROL	1	
- 8	1213035-4		PLATE ASSEMBLY	1	
- 9	0713187-3-418		COVER-STATIONARY PANEL UPPER	1	
-10	0713518-18-418		COVER-STATIONARY PANEL LOWER		
			ATTACHING PARTS	5	
	S1021Z4-68		SCREW		
			---*---	1	
-11	S1255-3	*	SWITCH, STARTER & LOCK KIT	1	
-12	S1102-1		JACK-MICROPHONE	1	
-13	S1305N3		TACHOMETER WHEN EXHAUSTED USE S-1305N8	1	
	S1305N8		TACHOMETER		
			ATTACHING PARTS	4	
-14	AN5078632R12		SCREW	4	
	MS20365B632C		NUT		
			---*---	1	
-15	S1605-3		SHAFT-TACHOMETER		
			ATTACHING PARTS	1	
	2981A4-27		CLAMP TIN	1	
	S1021Z8-6		SCREW		
			---*---	1	
-16	S1301N1		GAGE-MANIFOLD PRESSURE		
			ATTACHING PARTS	4	
	AN5078632R12		SCREW	4	
	MS20365B632C		NUT		
			---*---	1	
-17	AN816-2D		NIPPLE	1	
-18	0500106-273		LINE ASSEMBLY-MANIFOLD PRESSURE WEU 0500118-96	1	
	0500118-96		LINE ASSEMBLY-MANIFOLD PRESSURE	1	
-19	S1307N2		GAGE-CYLINDER HEAD TEMPERATURE		
			ATTACHING PARTS	4	
	AN5078632R12		SCREW	4	
	MS20365B632C		NUT		
			---*---	1	
	0311018-10		LEAD-CYLINDER HEAD TEMPERATURE GAGE	1	
-20	0513144-16		PANEL ASSEMBLY		
			ATTACHING PARTS	2	
	AN5078632R12		SCREW	2	
	AN936A6B		WASHER	2	
	AN34086		NUT		
			---*---	1	
-21	0513144-2		GAGE-OIL TEMPERATURE	1	
-22	0513144-10		GAGE-OIL PRESSURE	2	
-23	0513144-14		GAGE-FUEL	1	
	0716128-30		GAGE-AUXILIARY FUEL	1	
-24	S1311N1		GAGE-CARBURETOR AIR TEMPERATURE		
			ATTACHING PARTS	1	
	0713208-1		ESCUTCHEON	4	
	AN5078632R12		SCREW		
			---*---	1	
	0713209-1		PLACARD-CARBURETOR AIR TEMPERATURE GAGE	1	
-25	S1414N1		GAGE-SUCTION		
			ATTACHING PARTS	4	
	AN5078632R12		SCREW	4	
	MS20365B632C		NUT		
			---*---	1	
-26	S1230-2		CONTROL-CARBURETOR HEAT	1	
-27	0311538-12		PRIMER ASSEMBLY WHEN EXHAUSTED USE C291502-0101	1	
	S1240-5		KNOB	1	
-28	SEE FIG 87		CONTROL SYSTEM INSTALLATION-COWL FLAPS	1	
-29	S1222-1		CONTROL-THROTTLE	1	C
	0713192-2		REDUCER-THROTTLE CONTROL	1	
-30	S1223-4		CONTROL-PROPELLER PITCH	1	
-31	0513039-7	**	LIGHTER-CIGAR CUNO	1	
	L4858-1	**	HEATING ELEMENT CUNO	1	
	S1240-6		KNOB-CIGAR LIGHTER		

CONTINUED ON NEXT PAGE

FIGURE AND INDEX NO.	PART NUMBER	DESCRIPTION 1 2 3 4 5 6 7	UNITS PER ASSY	USABLE ON CODE
67 -32	S1234-1	CONTROL-MIXTURE	1	
	0713192-1	REDUCER-MIXTURE CONTROL	1	C
-33	0713303-5	SWITCH-LANDING LIGHT	1	
	0713303-2	KNOB	1	
-34	0713026-9	SWITCH-ROTATING BEACON	1	
	0713303-2	KNOB-ROTATING BEACON SWITCH	1	
-35	0713026-5	SWITCH-MASTER	1	
	0713303-2	KNOB-MASTER SWITCH	1	
	0716128-28	SWITCH-AUXILIARY FUEL	1	
-36	0713026-4	SWITCH-PITOT HEAT	1	
	0713303-2	KNOB-PITOT HEAT SWITCH	1	
-37	0511063	SWITCH-OIL DILUTION	1	B
	0511063-2	NUT	1	B
-38	0713222-1	PLACARD-OIL DILUTION	1	B
-39	0713026-4	SWITCH-NAVIGATION LIGHTS SINGLE POLE	1	
	0713026-9	SWITCH-NAVIGATION LIGHTS DOUBLE POLE	1	
	0713171-1	SHIELD-NAVIGATION LIGHT SWITCH	1	
	0713303-2	KNOB-NAVIGATION LIGHT SWITCH	1	
-40	S1239-4	CONTROL-STRAINER DRAIN REF S1239-12	1	
	S1239-13	CONTROL-STRAINER DRAIN FLOATPLANE CP	1	
-41	S1239-6	CONTROL-CABIN AIR	1	
-42	S1241-7	CONTROL-CABIN HEAT	1	
-43	0513051-8	LIGHT ASSEMBLY-CHARGE INDICATOR	1	
	S1876-1	BULB	1	
	S1320-1	AMMETER	1	
		ATTACHING PARTS		
	0700036-2	ADAPTER	1	
	AN515-6R6	SCREW	4	
	NAS679A06	NUT	4	
		---*---		
-44	S1360-50	CIRCUIT BREAKER SPT	1	
-45	S1360-20	CIRCUIT BREAKER SPT	1	
-46	S1360-10	CIRCUIT BREAKER SPT	1	
-47	S1360-10	CIRCUIT BREAKER SPT	1	
-48	S1360-10	CIRCUIT BREAKER SPT	1	
-49	S1360-10	CIRCUIT BREAKER SPT	1	
-50	CA2	CIRCUIT BREAKER SPT	1	
	PA2	CIRCUIT BREAKER SPT ALT	1	
		ATTACHING PARTS		
	AN507-832R12	SCREW	2	
	AN936A8	WASHER	2	
	AN340-8	NUT	2	
		---*---		
-51	0713504-3	PANEL-SHOCK MOUNTED INSTRUMENT	1	
		ATTACHING PARTS		
-52	0411059-1	MOUNT-SHOCK	3	
-53	0413247	STRAP-GROUND	1	
-54	AN340B8	NUT	6	
-55	AN936A8	WASHER	6	
-56	S355	SPACER	3	
-57	102PDLN4	MOUNT-SHOCK LO	2	
-58	AN507B832R12	SCREW	2	
-59	NAS43DD3-14	SPACER	2	
-60	J2049-1D	WASHER LO	2	
-61	MS20365B832C	NUT	2	
-62	AN515B6R6	SCREW	4	
-63	MS20365B632C	NUT	4	
		---*---		
-64	0713522-1-418	COVER-SHOCK PANEL	1	
		ATTACHING PARTS		
-65	49265K2215	FASTENER UC	4	
		---*---		
-66	0713028-8	CARD-CORRECTION	1	
	0713028-3	COVER-CORRECTION CARD	1	
		RETAINER ASSEMBLY-CORRECTION CARD	NP	
		ATTACHING PARTS		
-67	S1022Z4-12B	SCREW	2	
	NAS43DD1-18	SPACER	2	
		---*---		

CONTINUED ON NEXT PAGE

FIGURE AND INDEX NO.	PART NUMBER	DESCRIPTION 1 2 3 4 5 6 7	UNITS PER ASSY	USABLE ON CODE
67 -68	0813569-2	RETAINER-CORRECTION CARD	1	
-69		PLATE-REGISTRATION NUMBER	NP	
-70	S1304N2	INDICATOR-VERTICAL SPEED	1	
	S1392N1	INDICATOR-VERTICAL SPEED ALT	1	
	CM2647N1	INDICATOR-VERTICAL SPEED 10 METER PER MIN.	1	
	S1385N1	INDICATOR-VERTICAL SPEED ALT 10 METERS PER. MIN.	1	
		ATTACHING PARTS		
	AN51586R12	SCREW	4	
	AN34086	NUT	4	
	AN936B6B	WASHER	4	
		---*---		
	MS20825-4D	ELBOW	1	
-71	S1302N1	INDICATOR-TURN & BANK	1	
		ATTACHING PARTS		
	AN51586R12	SCREW	4	
	AN34086	NUT	4	
	AN936B6B	WASHER	4	
		---*---		
-72	S1324N3	INDICATOR-AIRSPEED	1	D
	S1470N3	INDICATOR-AIRSPEED ALTERNATE	1	D
	S1324N6	INDICATOR-AIRSPEED	1	C
	S1470N6	INDICATOR-AIRSPEED ALTERNATE	1	C
	S1387N3	INDICATOR-AIRSPEED KILOMETERS PER HOUR & MPH	1	
	S1324N2	INDICATOR-AIRSPEED-AMPHIBIAN	1	D
	S1470N2	INDICATOR-AIRSPEED-AMPHIBIAN	1	C
	S1387N2	INDICATOR-AIRSPEED-AMPHIBIAN KILOMETERS PER HOUR & MPH	1	
		ATTACHING PARTS		
	AN51586R12	SCREW	4	
	MS20365B632C	NUT	4	
		---*---		
-73	S1314N1	ALTIMETER-20,000 FT FOR VFR APPLICATIONS ONLY WHEN EXHAUSTED USE C661011-0105	1	
	S1313N1	ALTIMETER-35,000 FT SENSITIVE FOR VFR APPLICATIONS ONLY WHEN EXHAUSTED USE C661011-0105	1	
	C661011-0105	ALTIMETER-20,000 FT SENSITIVE	1	
	S1432N1	ALTIMETER-35,000 FT FEET/MILLIBARS FOR VFR APPLICATIONS ONLY WHEN EXHAUSTED USE C661011-0106	1	
	C661011-0106	ALTIMETER-20,000 FT FEET/MILLIBARS	1	
	S1384N1	ALTIMETER-METERS/MILLIBARS FOR VFR APPLICATIONS ONLY	1	
		ATTACHING PARTS		
	AN51586R12	SCREW	4	
		---*---		
-74	CM2629N1	CLOCK 8 DAY	1	
	S1317N1	CLOCK ELECTRIC	1	
		ATTACHING PARTS		
	AN51586R12	SCREW	4	
	MS20365B632C	NUT	4	
		---*---		
-75	0513146-11	COLLAR-CONTROL TUBE LH	1	
	0411224	BALL-CONTROL TUBE LH	1	
	0713099-1	SOCKET-CONTROL TUBE LH	1	
		ATTACHING PARTS		
-76	AN515-6R8	SCREW	4	
	NAS679A06	NUT	4	
	AN960-6L	WASHER	AR	
		---*---		
-77	0713099-1	SOCKET-CONTROL TUBE RH	1	
	0411224	BALL-CONTROL TUBE RH	1	
		ATTACHING PARTS		
-78	AN5156R8	SCREW	4	
	NAS679A06	NUT	4	
	AN960-6L	WASHER	AR	
		---*---		

CONTINUED ON NEXT PAGE

FIGURE AND INDEX NO.	PART NUMBER	DESCRIPTION 1 2 3 4 5 6 7	UNITS PER ASSY	USABLE ON CODE
67 -79	S1316N1	GYRO-DIRECTIONAL-REBUILT WHEN EXHAUSTED ----------	1	
		USE C661002-0101		
	C661002-0101	GYRO-DIRECTIONAL-REMANUFACTURED WHEN EXHAUSTED ----------	1	
		ORDER AK172-116 KIT		
	0311056-5	GYRO-DIRECTIONAL-NEW WHEN EXHAUSTED ORDER AK172-116 KIT -	1	
	S1327N1	INDICATOR-DIRECTIONAL GYRO-AZIMUTH-PICTORIAL-TYPE 34B -------	1	
		WITH VACUUM WARNING LIGHTS WHEN EXHAUSTED		
		ORDER AK172-116 KIT		
		ATTACHING PARTS		
	AN515B10R14	SCREW ----------	4	
	MS20365B632C	NUT ----------	4	
		---*---		
-80	S1309N1	GYRO-HORIZON-REBUILT WEU C661001-0101 ----------	1	
	C661001-0101	GYRO-HORIZON-REMANUFACTURED WHEN EXHAUSTED ----------	1	
		ORDER AK172-116 KIT		
	0311058-4	GYRO-HORIZON-NEW WHEN EXHAUSTED ORDER AK172-116 KIT -----	1	
	S1326N1	INDICATOR-GYRO HORIZON-PICTORIAL-TYPE 34B ----------	1	
		WITH VACUUM WARNING LIGHTS WHEN EXHAUSTED		
		ORDER AK172-116 KIT		
		ATTACHING PARTS		
	AN515B10R16	SCREW ----------	4	
	AN520B10R14	SCREW ----------	4	
	MS20365B632C	NUT ----------	4	
		---*---		
	330R	BULB ----------	2	
-81	S1365-1	SWITCH ----------	1	
-82	49265	STUD-TRI MOUNT UC ----------	AR	
	S290D832	WASHER ----------	AR	
-83	0413126-7	RHEOSTAT ASSEMBLY ----------	1	
-84	SEE FIG 69	GLOVE BOX INSTALLATION ----------	1	
-85	SEE FIG 69	MAP CASE INSTALLATION ----------	1	
-86	0713189-1	ESCUTCHEON ----------	1	
-87	0713208-1	ESCUTCHEON ----------	2	
-88	0770056-1	COVER ASSEMBLY ----------	1	
		ATTACHING PARTS		
-89	S1021Z6-6	SCREW ----------	2	
-90	NAS446-2-3	NUT ----------	2	
		---*---		
-91	0770057-1	BRACKET ----------	1	
-92	0713721-1	FACEPLATE & BRACKET ASSEMBLY ----------	1	
		ATTACHING PARTS		
-93	S1021Z4-6	SCREW ----------	2	
-94	NAS446-1-3	NUT ----------	2	
		---*---		
-95	S1284-1	SWITCH-PUSH BUTTON VACUUM PRESS TO TEST ----------	1	

NOTE. *THIS KIT ALSO INCLUDES 2 DOOR LOCKS & KEYS.

NOTE. **CASCO PARTS ARE NO LONGER AVAILABLE. FOR REPLACEMENT ORDER COMPLETE CUND ASSEMBLY, 0513039-7 & RESPECTIVE KNOB.

NOTE. #WHEN ORDERING THIS PART FOR AIRCRAFT SERIALS 18051184 THRU 18051312 ALSO ORDER 0411897-1.

A---SERIAL 18051184 THRU 18051445
B---SERIAL 18051184 THRU 18051237
C---SERIAL 18051313 THRU 18051445
D---SERIAL 18051184 THRU 18051312

FIGURE AND INDEX NO.	PART NUMBER	DESCRIPTION 1 2 3 4 5 6 7	UNITS PER ASSY	USABLE ON CODE
68 -		EQUIPMENT INSTALLATION & ASSEMBLY-INSTRUMENT PANEL	1	A
- 1	0713185-1	PANEL ASSEMBLY-STATIONARY	1	
	0713125-8	PANEL ASSEMBLY-STATIONARY	1	B
- 2	0713126-1	PAN	1	
- 3	0756001-4	BRACKET-INDUCTION HOT AIR	1	
- 4	0756001-13	BRACKET-STRAINER DRAIN CONTROL	1	
- 5	0713159-1	BRACKET-STARTER SWITCH CUTOUT	1	B
		ATTACHING PARTS		
	S1021Z6-8	SCREW	2	B
	NAS446-2-3	NUT	2	B
		---*---		
- 6	0713501-4	STIFFENER	1	
- 7	0713501-5	STIFFENER	1	
- 8	0413131-3	BRACKET-RHEOSTAT	1	
- 9	0713127-1	BRACKET-FLAP CONTROL	2	
-10	1213035-4	PLATE ASSEMBLY-FLAP CONTROL	1	
-11	0713518-10	COVER-STATIONARY PANEL UPPER	1	B
	0713188-3	COVER-STATIONARY PANEL UPPER	1	C
-12	0713518-8-279	COVER-STATIONARY PANEL LOWER	1	B
	0713518-12-279	COVER-STATIONARY PANEL LOWER	1	D
	0713518-20-418	COVER-STATIONARY PANEL LOWER	1	K
	0713188-1-418	COVER-STATIONARY PANEL LOWER	1	J
		ATTACHING PARTS		
	S1021Z4-6B	SCREW	5	
		---*---		
-13	0713129-4 *	KIT-IGNITION SWITCH WHEN EXHAUSTED USE C292501-0102	1	F
	C292501-0102 *	KIT-IGNITION SWITCH	1	F
	S1255-3 *	KIT-IGNITION SWITCH WHEN EXHAUSTED USE S1255-6	1	D
	S1255-6 *	KIT-IGNITION SWITCH	1	D
-14	S1102-1	JACK-MICROPHONE	1	
	CM2692-12-3S	PLUG BUTTON UC USED WHEN PHONE JACK NOT INSTALLED	1	
-15	0511035-5	TACHOMETER WHEN EXHAUSTED USE S-1305N9	1	G
	S1305N9	TACHOMETER	1	E
		ATTACHING PARTS		
-16	AN5078632R12	SCREW	4	
	MS20365B632C	NUT	4	
		---*---		
-17	S1605-3	SHAFT-TACHOMETER	1	
		ATTACHING PARTS		
	S1485D4U	CLAMP TIN	1	G
	NAS434F4	CLAMP	1	E
	S1021Z8-6	SCREW	1	
		---*---		
-18	0311029-6	GAGE-MANIFOLD PRESSURE WHEN EXHAUSTED USE S-1301N2	1	
	S1301N2	GAGE-MANIFOLD PRESSURE	1	
		ATTACHING PARTS		
	AN5078632R12	SCREW	4	
	MS20365B632C	NUT	4	
		---*---		
-19	AN816-2D	NIPPLE	1	
-20	0500106-273	LINE ASSEMBLY-MANIFOLD PRESSURE WEU 0500118-96	1	
	0500118-96	LINE ASSEMBLY-MANIFOLD PRESSURE	1	
-21	0813601-9	GAGE-CYLINDER HEAD TEMP WHEN EXHAUSTED USE S-1310N1	1	
	S1310N1	GAGE-CYLINDER HEAD TEMP	1	
		ATTACHING PARTS		
	AN5078632R12	SCREW	4	
	MS20365B632C	NUT	4	
		---*---		
	0311018-10	LEAD-CYLINDER HEAD TEMPERATURE GAGE	1	
-22	0513144-16	PANEL ASSEMBLY	1	
		ATTACHING PARTS		
	AN5078632R12	SCREW	2	
	AN936A6B	WASHER	2	
	AN34086	NUT	2	
		---*---		
-23	0513144-2	GAGE-OIL TEMPERATURE	1	
-24	0513144-10	GAGE-OIL PRESSURE	1	
-25	0513144-14	GAGE-FUEL	2	
-26	0311057-1	GAGE-SUCTION WHEN EXHAUSTED USE S1414N1	1	
	S1414N1	GAGE-SUCTION	1	
		ATTACHING PARTS		
	AN5078632R12	SCREW	4	
	MS20365B632C	NUT	4	
		---*---		

CONTINUED ON NEXT PAGE

Instruments

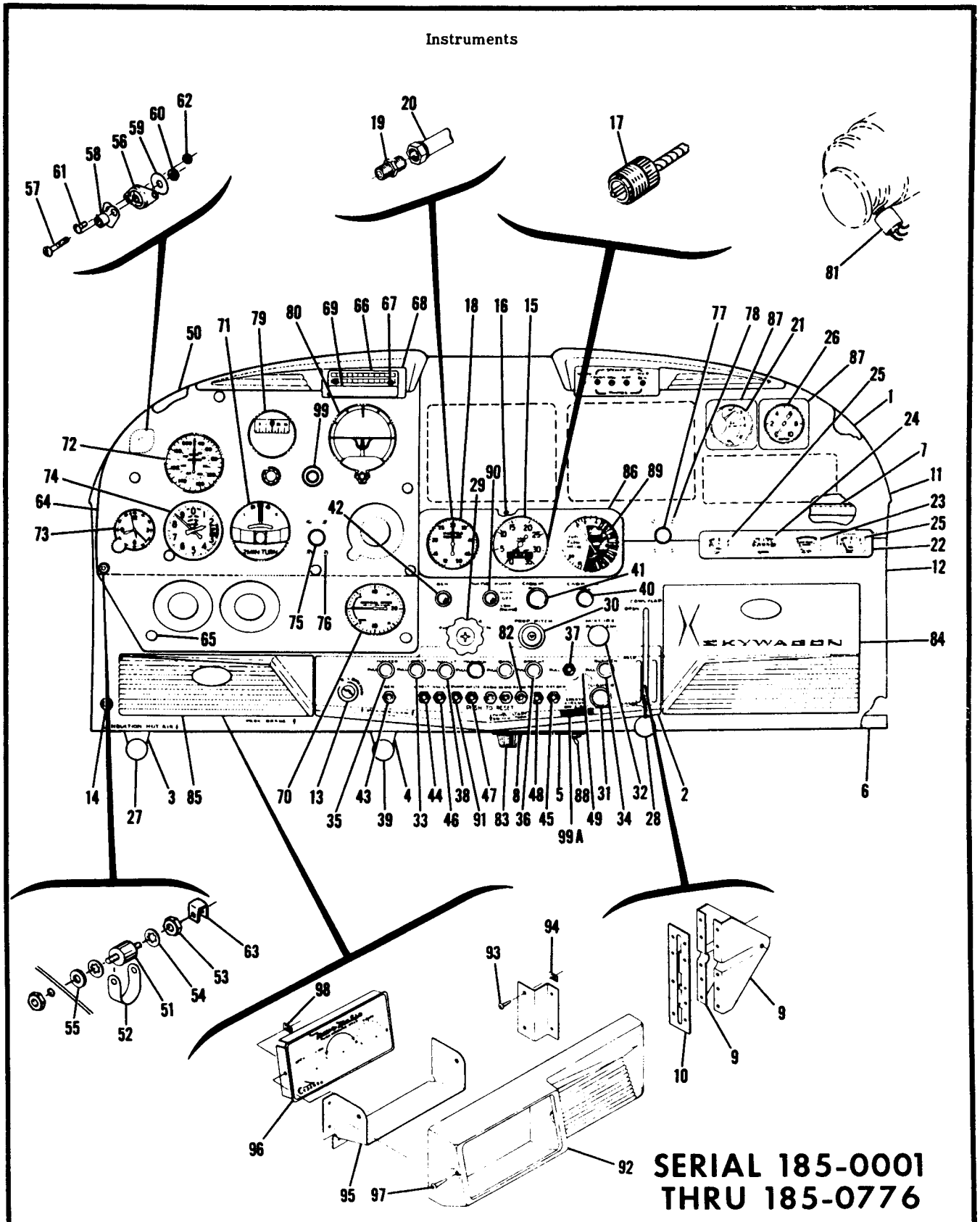

Figure 68. Instrument Panel Equipment Installation & Assembly

FIGURE AND INDEX NO.	PART NUMBER	DESCRIPTION 1 2 3 4 5 6 7	UNITS PER ASSY	USABLE ON CODE
68 -27	S1230-2	CONTROL-INDUCTION AIR	1	
		ATTACHING PARTS	1	
	S1485D4U	CLAMP	1	
	AN742D3	CLAMP	1	
	S1021Z8-8	SCREW		
		---*---	NP	
-28	SEE FIG 87	CONTROL SYSTEM INSTALLATION-COWL FLAPS	1	B
-29	1213228-3	CONTROL-THROTTLE	1	C
	S1294-1	CONTROL-THROTTLE	1	
-30	S1223-5	CONTROL-PROPELLER PITCH	1	
-31	0513039-7 **	LIGHTER ASSEMBLY CUNO	1	
	L4858-1 **	HEATING ELEMENT CUNO	1	
	S1240-6	KNOB-CIGAR LIGHTER	1	B
-32	1213229-2	CONTROL-MIXTURE	1	C
	S1220-4	CONTROL-MIXTURE	1	
-33	0713035	SWITCH-LANDING LIGHT	1	
	0713303-2	KNOB-LANDING LIGHT SWITCH	1	
-34	0713026-4	SWITCH-ROTATING BEACON	1	
	0713303-2	KNOB-ROTATING BEACON SWITCH	1	
-35	0713026-5	SWITCH-MASTER	1	
	0713303-2	KNOB-MASTER SWITCH	1	
-36	0713026-4	SWITCH-PITOT HEAT	1	
	0713303-2	KNOB-PITOT HEAT SWITCH	1	
-37	0511063	SWITCH-OIL DILUTION	1	
-38	0713026-4	SWITCH-NAVIGATION LIGHTS SINGLE POLE	1	
	0713026-9	SWITCH-NAVIGATION LIGHTS DOUBLE POLE	1	
	0713303-2	KNOB-NAVIGATION LIGHT SWITCH	1	
-39	S1239-4	CONTROL-STRAINER DRAIN REF S1239-12	1	
	S1239-13	CONTROL-STRAINER DRAIN FLOATPLANE CP	1	
-40	S1239-6	CONTROL-CABIN AIR	1	
-41	S1241-7	CONTROL-CABIN HEAT REF 0713141-5	1	
-42	0513051-8	LIGHT ASSEMBLY-CHARGE INDICATOR	1	
	S1876-1	BULB	1	
	0713038	AMMETER WHEN EXHAUSTED USE S-1320-1	1	
	S1320-1	AMMETER		
		ATTACHING PARTS	1	
	0700036-2	ADAPTER	4	
	AN515-6R6	SCREW	4	
	NAS679A06	NUT		
		---*---	1	
-43	S1360-50	CIRCUIT BREAKER SPT	1	
-44	S1360-20	CIRCUIT BREAKER SPT	1	
-45	S1360-15	CIRCUIT BREAKER SPT	1	
-46	S1360-10	CIRCUIT BREAKER SPT	1	
-47	S1360-10	CIRCUIT BREAKER SPT	1	
-48	S1360-10	CIRCUIT BREAKER SPT	1	
-49	CA2	CIRCUIT BREAKER SPT	1	
	PA2	CIRCUIT BREAKER SPT ALT	1	
		ATTACHING PARTS	2	
	AN507-832R12	SCREW		
		---*---	1	G
-50	0713504-2	PANEL-SHOCK MOUNTED INSTRUMENT	1	E
	0713504-3	PANEL-SHOCK MOUNTED INSTRUMENT		
		ATTACHING PARTS	3	
-51	0411059-1	MOUNT-SHOCK	1	
-52	0413247	STRAP-GROUND	6	
-53	AN340B8	NUT	6	
-54	AN936C8	WASHER	3	
-55	S355	SPACER	2	
-56	102PDLN4	MOUNT-SHOCK LO	2	
-57	AN5078832R12	SCREW	2	
-58	NAS43DD3-14	SPACER	2	
-59	J2049-1D	WASHER LO	2	
-60	MS20365B832C	NUT	4	
-61	AN51586R6	SCREW	4	
-62	MS20365B632C	NUT		
		---*---	1	
-63	0713308-1	BRACKET	1	G
-64	0713522-1-279	COVER-SHOCK PANEL	1	E
	0713522-1-418	COVER-SHOCK PANEL		
		ATTACHING PARTS	5	
-65	49265K2215	FASTENER UC		
		---*---		

CONTINUED ON NEXT PAGE

FIGURE AND INDEX NO.	PART NUMBER	DESCRIPTION 1 2 3 4 5 6 7	UNITS PER ASSY	USABLE ON CODE
68 -66	0713028-8	CARD-CORRECTION	1	
	0713028-3	COVER-CORRECTION CARD	1	
		RETAINER ASSEMBLY-CORRECTION CARD	NP	
		ATTACHING PARTS		
-67	S1022Z4-12B	SCREW	2	
	NAS43DD1-18	SPACER	2	
		---*---		
-68	0813569-2	RETAINER-CORRECTION CARD	1	
-69		PLATE-REGISTRATION NUMBER	NP	
-70	0411069-1	INDICATOR-VERTICAL SPEED WHEN EXHAUSTED USE S-1304N2	1	B
	S1304N2	INDICATOR-VERTICAL SPEED	1	C
	S1392N1	INDICATOR-VERTICAL SPEED ALT	1	
	0411069-3	INDICATOR-VERTICAL SPEED-ALT WHEN EXHAUSTED USE S-1304N1-	1	B
	S1304N1	INDICATOR-VERTICAL SPEED	1	C
	CM2647N1	INDICATOR-VERTICAL SPEED 10 METERS PER MIN.	1	
	S1385N1	INDICATOR-VERTICAL SPEED ALT 10 METERS PER MIN.	1	
		ATTACHING PARTS		
	AN51586R12	SCREW	4	
	MS20365B632C	NUT	4	
		---*---		
	MS20825-4D	TEE	1	
-71	0411009-6	INDICATOR-TURN & BANK WHEN EXHAUSTED USE S-1302N1	1	
	S1302N1	INDICATOR-TURN & BANK	1	
		ATTACHING PARTS		
	AN51586R12	SCREW	4	
	MS20365B632C	NUT	4	
		---*---		
-72	0713163-1	INDICATOR-AIRSPEED WHEN EXHAUSTED USE S-1321N2	1	B
	S1321N2	INDICATOR-AIRSPEED	1	C
	S1471N2	INDICATOR-AIRSPEED ALT	1	
	S1388N2	INDICATOR-AIRSPEED KILOMETERS PER HOUR & MPH	1	
		ATTACHING PARTS		
	AN515B6R	SCREW	4	
	MS20365B632C	NUT	4	
		---*---		
-73	CM2629N1	CLOCK-8 DAY	1	
	0713131-1	CLOCK-ELECTRIC WHEN EXHAUSTED USE S-1317N1	1	
	S1317N1	CLOCK-ELECTRIC	1	
		ATTACHING PARTS		
	AN515B6R	SCREW	4	
	MS20365B632C	NUT	4	
		---*---		
-74	0411007-7	ALTIMETER-20,000 FT FOR VFR APPLICATIONS ONLY WHEN EXHAUSTED USE C661011-0105	1	B
	S1314N1	ALTIMETER-20,000 FT FOR VFR APPLICATIONS ONLY WHEN EXHAUSTED USE C661011-0105	1	C
	0411007-8	ALTIMETER-SENSITIVE FOR VFR APPLICATIONS ONLY WHEN EXHAUSTED USE C661011-0105	1	B
	S1313N1	ALTIMETER-35,000 FT SENSITIVE FOR VFR APPLICATIONS ONLY WHEN EXHAUSTED USE C661011-0105	1	C
	C661011-0105	ALTIMETER-20,000 FT SENSITIVE	1	
	S1432N1	ALTIMETER-35,000 FT FEET/MILLIBARS FOR VFR APPLICATIONS ONLY WHEN EXHAUSTED USE C661011-0106	1	C
	C661011-0106	ALTIMETER-20,000 FT FEET/MILLIBARS	1	
	S1384N1	ALTIMETER-METERS/MILLIBARS FOR VFR APPLICATIONS ONLY	1	
		ATTACHING PARTS		
	AN51586R12	SCREW	4	
	MS20365B632C	NUT	4	
		---*---		
-75	0513146-11	COLLAR-CONTROL TUBE LH	1	
	0411224	BALL-CONTROL TUBE LH	1	
	0713099-1	SOCKET-CONTROL TUBE LH	1	
		ATTACHING PARTS		
-76	AN515-6R8	SCREW	4	
	NAS679A06	NUT	4	
	AN960-6L	WASHER	AR	
		---*---		
-77	0713099-1	SOCKET-CONTROL TUBE RH	1	
	0411224	BALL-CONTROL TUBE RH	1	
		ATTACHING PARTS		
-78	AN515-6R8	SCREW	4	
	NAS679A06	NUT	4	
	AN960-6L	WASHER	AR	
		---*---		

CONTINUED ON NEXT PAGE

FIGURE AND INDEX NO.	PART NUMBER	DESCRIPTION 1 2 3 4 5 6 7	UNITS PER ASSY	USABLE ON CODE
68 -79	0311056-4	GYRO-DIRECTIONAL-REBUILT WHEN EXHAUSTED USE S-1316N1 ----	1	
	S1316N1	GYRO-DIRECTIONAL-REBUILT WHEN EXHAUSTED ----------	1	
		USE C661002-0101		
	C661002-0101	GYRO-DIRECTIONAL-REMANUFACTURED WHEN EXHAUSTED ----------	1	
		ORDER AK172-116 KIT		
	0311056-5	GYRO-DIRECTIONAL-NEW WHEN EXHAUSTED ORDER AK172-116 KIT -	1	
	S1327N1	INDICATOR-DIRECTIONAL GYRO-AZIMUTH-PICTORIAL-TYPE 34B -------	1	C
		WITH VACUUM WARNING LIGHTS WHEN EXHAUSTED		
		ORDER AK172-116 KIT		
		ATTACHING PARTS		
	AN515B6R	SCREW ----------	4	
	MS20365B632C	NUT ----------	4	
		---*---		
-80	0311058-5	GYRO-HORIZON-REBUILT WHEN EXHAUSTED USE S-1309N1 --------	1	
	S1309N1	GYRO-HORIZON-REBUILT WEU C661001-0101 ----------	1	
	C661001-0101	GYRO-HORIZON-REMANUFACTURED WHEN EXHAUSTED ----------	1	
		ORDER AK172-116 KIT		
	0311058-4	GYRO-HORIZON-NEW WHEN EXHAUSTED ORDER AK172-116 KIT -----	1	
	S1326N1	INDICATOR-GYRO HORIZON-PICTORIAL-TYPE 34B ----------	1	C
		WITH VACUUM WARNING LIGHTS WHEN EXHAUSTED		
		ORDER AK172-116 KIT		
		ATTACHING PARTS		
	AN515B6R	SCREW ----------	4	
	AN520B10R14	SCREW ----------	4	C
	MS20365B632C	NUT ----------	4	
		---*---		
	330R	BULB ----------	2	C
-81	S1365-1	SWITCH ----------	1	C
-82	49265	STUD-TRI MOUNT UC ----------	AR	
	S290D832	WASHER ----------	AR	
-83	0413126-7	RHEOSTAT ASSEMBLY ----------	1	
-84	SEE FIG 69	GLOVE BOX INSTALLATION ----------	1	
-85	SEE FIG 69	MAP CASE INSTALLATION ----------	1	
-86	0713157-1	ESCUTCHEON ----------	1	
-87	0713208-1	ESCUTCHEON ----------	2	
-88	S382-2	SWITCH-STARTER CIRCUIT ----------	1	B
-89	S1393N1	GAGE-FUEL FLOW WHEN EXHAUSTED USE C662010-0102 ----------	1	
	AN816-3D	NIPPLE ----------	1	
-90	S392-1	SWITCH-AUXILIARY FUEL ----------	1	
	0713192-3	REDUCER-AUXILIARY FUEL PUMP SWITCH ----------	1	J
-91	PSM10N	CIRCUIT BREAKER-FUEL PUMP SPT ----------	1	
-92	0770056-1	COVER ASSEMBLY ----------	1	C
		ATTACHING PARTS		
-93	S1021Z6-6	SCREW ----------	2	
-94	NAS446-2-3	NUT ----------	2	
		---*---		
-95	0770057-1	BRACKET ----------	1	C
-96	0713721-1	FACEPLATE & BRACKET ASSEMBLY ----------	1	C
		ATTACHING PARTS		
-97	S1021Z4-6	SCREW ----------	2	
-98	NAS446-1-3	NUT ----------	2	
		---*---		
-99	S1284-1	SWITCH-PUSH TO TEST-VACUUM PRESS TO TEST ----------	1	C
-99A	0716112-1	PLACARD-FUEL 81 GALS. ----------	1	H

NOTE. *THIS KIT ALSO INCLUDES 2 DOOR LOCKS & KEYS

NOTE. **CASCO PARTS ARE NO LONGER AVAILABLE.
FOR REPLACEMENT ORDER COMPLETE CUNO
ASSEMBLY,0513039-7 & RESPECTIVE KNOB.

A---SERIAL 185-0001 THRU 185-0776
B---SERIAL 185-0001 THRU 185-0237
C---SERIAL 185-0238 THRU 185-0776
D---SERIAL 185-0238 THRU 185-0512
E---SERIAL 185-0513 THRU 185-0776
F---SERIAL 185-0001 THRU 185-0237 &
185-0513 THRU 185-0776
G---SERIAL 185-0001 THRU 185-0512
H---SERIAL 185-0414 THRU 185-0776
J---SERIAL 185-0654 THRU 185-0776
K---SERIAL 185-0513 THRU 185-0653

Instruments (Cont)

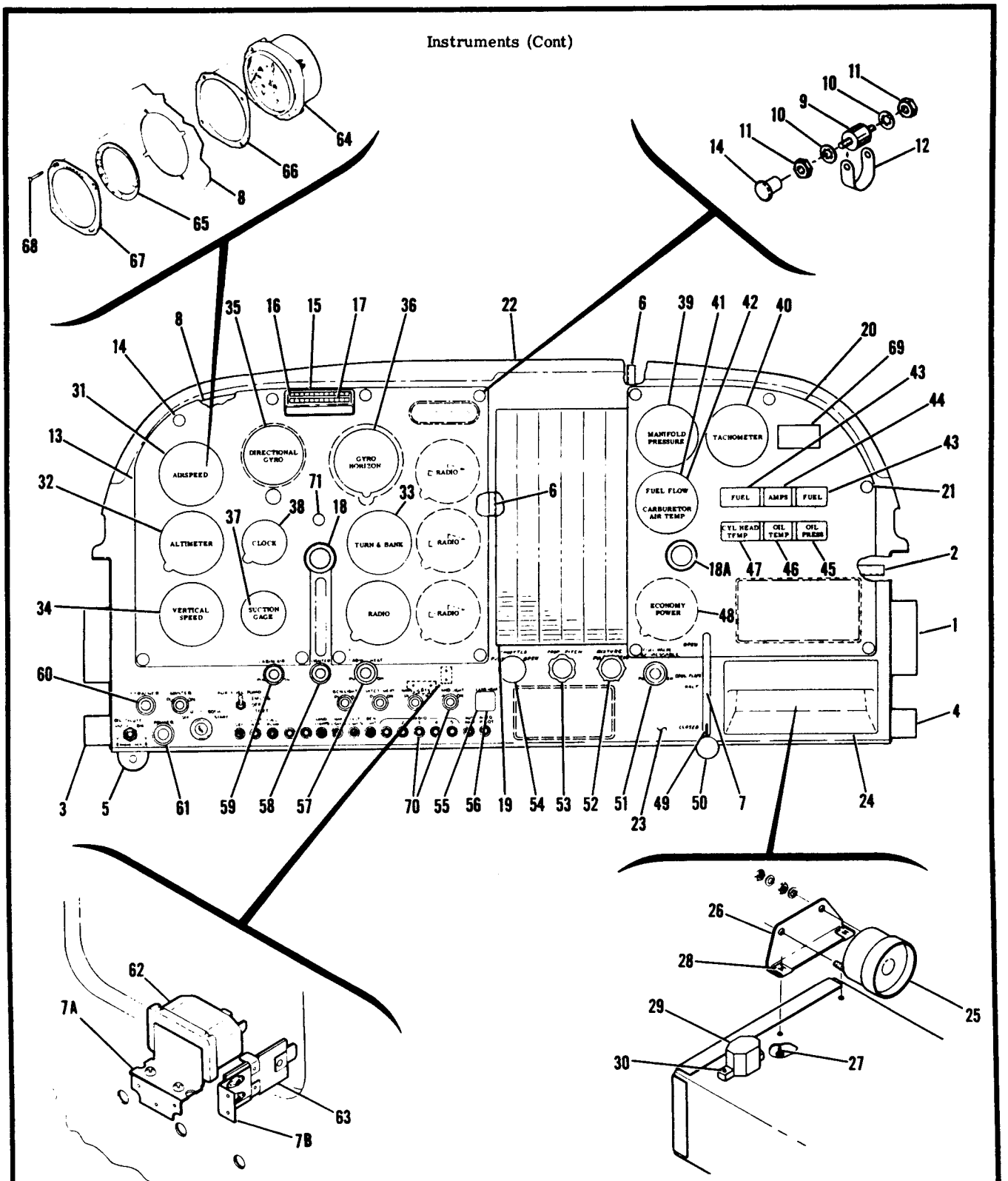

SERIAL 18051446 THRU 18051875
SERIAL 185-0777 THRU 185-1300

Figure 68A. Instrument Panel Equipment Installation

FIGURE AND INDEX NO.	PART NUMBER	DESCRIPTION 1 2 3 4 5 6 7	UNITS PER ASSY	USABLE ON CODE
68A-		INSTRUMENT PANEL EQUIPMENT INSTALLATION	NP	A
- 1	0713755-1	PANEL ASSEMBLY-STATIONARY	1	
- 2	0713755-7	ANGLE	1	
- 3	0713755-8	SUPPORT-LH	1	
- 4	0713755-9	SUPPORT-RH	1	
- 5	0513316-9	MOUNT-PHONE JACK	1	
- 6	0713755-10	ANGLE-LH	1	
	0713755-11	ANGLE-RH	1	
- 7	0713755-4	PLATE ASSEMBLY	2	
	0713127-1	BRACKET-COWL FLAP CONTROL	1	T
- 7A	0713249-1	BRACKET ASSEMBLY-RELAY	1	T
- 7B	0713249-2	BRACKET ASSEMBLY-DIODEBOARD	2	T
	NAS697A08K	NUTPLATE	1	S
- 8	0713755-12	PANEL-SHOCK	1	T
	0713755-15	PANEL-SHOCK		
		ATTACHING PARTS		
- 9	0411059-3	FLEX MOUNT	8	
-10	AN936A8	WASHER	16	
-11	AN34088	NUT	16	
-12	0413247	STRAP-GROUND	2	
		---*---		
-13	0713764-8	COVER-SHOCK PANEL	1	S
	0713764-13 ¤	COVER-SHOCK PANEL	1	T
		ATTACHING PARTS		
-14	0513351-1	SCREW POST	8	
		---*---		
-15	0813569-1	RETAINER-COMPASS CARD	1	
		ATTACHING PARTS		
-16	S1022Z4-68	SCREW	2	
	NAS446-1-3	NUT	2	
		---*---		
-17	0713028-8	CORRECTION CARD	1	
	0713028-3	COVER-CORRECTION CARD	1	
-18	0513311-1 ¤	SUPPORT ASSEMBLY-CONTROL TUBE LH	1	
-18A	0513311-2 ¤	SUPPORT ASSEMBLY-CONTROL TUBE RH	1	
		ATTACHING PARTS		
	AN515B6R8	SCREW	4	
	AN34086	NUT	4	
		---*---		
	0513056-3	GROMMET	2	
-19	0713765-1 ¤	COVER-RADIO	1	S
	0713871-1 ¤	COVER-RADIO	1	T
-20	0713764-12 ¤	COVER-RH	1	B
	0713764-14 ¤	COVER-RH	1	C
		ATTACHING PARTS		
-21	0513351-1	SCREW POST	5	
	AN515-8R7	SCREW	5	
	AN936A8	WASHER	5	
	AN34088	NUT	5	
		---*---		
-22	0713756-1 ¤	COVER ASSEMBLY-UPPER	1	S
	0713872-1 ¤	COVER ASSEMBLY-UPPER	1	T
-23	0713756-8 ¤	COVER-LOWER	1	U
	0713872-3 ¤	COVER-LOWER	1	W
	0713756-7 ¤	COVER-LOWER	1	V
	0713872-4 ¤	COVER-LOWER	1	X
-24	SEE FIG 69A	GLOVE BOX INSTALLATION	NP	
-25	S2077-5	HORN ASSEMBLY-STALL WARNING	1	Z
-26	0713738-3	BRACKET ASSEMBLY-HORN	1	Z
		ATTACHING PARTS		
-27	S1021Z8-6	SCREW	2	Z
		---*---		
-28	NAS395-12-3	NUT	2	Z
-29	CA2	CIRCUIT BREAKER MTCC	1	
		ATTACHING PARTS		
-30	AN515-6R8	SCREW	2	
	AN936A6	WASHER	2	
		---*---		
-31	S1470N6	INDICATOR-AIRSPEED	1	B
	S1471N2	INDICATOR-AIRSPEED	1	L
	S1471N9	INDICATOR-AIRSPEED	1	E
		ATTACHING PARTS		
	AN515B6R12	SCREW	4	
		---*---		

CONTINUED ON NEXT PAGE

FIGURE AND INDEX NO.	PART NUMBER	DESCRIPTION 1 2 3 4 5 6 7	UNITS PER ASSY	USABLE ON CODE
68A-32	S1314N1	ALTIMETER-20,000 FT FOR VFR APPLICATIONS ONLY ---------- WHEN EXHAUSTED USE C661011-0105	1	
	S1313N1	ALTIMETER-35,000 FT SENSITIVE FOR VFR APPLICATIONS -- ONLY WHEN EXHAUSTED USE C661011-0105	1	Y
	C661011-0105	ALTIMETER-20,000 FT SENSITIVE ----------	1	G
	S1432N1	ALTIMETER-35,000 FT FEET/MILLIBARS FOR VFR ---------- APPLICATIONS ONLY WHEN EXHAUSTED USE C661011-0106	1	Y
	C661011-0106	ALTIMETER-20,000 FT FEET/MILLIBARS ----------	1	G
-33	S1302N1	INDICATOR-TURN & BANK ----------	1	
	S1413N1	INDICATOR-TURN & BANK ALTERNATE ----------	1	
-34	S1304N2	INDICATOR-VERTICAL SPEED ----------	1	
	S1392N1	INDICATOR-VERTICAL SPEED ALTERNATE ----------	1	
		ATTACHING PARTS		
	AN515B6R12	SCREW ----------	4	
		---*---		
-35	C661002-0101	GYRO-DIRECTIONAL-REMANUFACTURED WHEN EXHAUSTED ---------- ORDER AK172-116 KIT	1	S
	C661002-0201	GYRO-DIRECTIONAL ----------	1	T
	C661002-0201R	GYRO-DIRECTIONAL RECONDITIONED ----------	1	T
	30370-0100	GYRO-DIRECTIONAL USED WITH NAVO-MATIC ARC ----------	1	
-36	C661001-0101	GYRO-HORIZON WHEN EXHAUSTED ORDER AK172-116 KIT ---------	1	S
	C661001-0201	GYRO-HORIZON ----------	1	T
	C661001-0201R	GYRO-HORIZON RECONDITIONED ----------	1	T
	30475-0000	GYRO-HORIZON USED WITH NAVO-MATIC ARC ----------	1	
-37	S1414N1	GAGE-SUCTION ----------	1	
-38	S1317N1	CLOCK-ELECTRIC ----------	1	
		ATTACHING PARTS		
	AN515B6R12	SCREW ----------	2	
		---*---		
-39	S1301-1	GAGE-MANIFOLD PRESSURE ----------	1	B
	S1301-2	GAGE-MANIFOLD PRESSURE 260 HP ----------	1	M
	C662001-0104	GAGE-MANIFOLD PRESSURE & FUEL FLOW 300 HP ----------	1	N
		ATTACHING PARTS		
	AN507B632R12	SCREW ----------	4	
	AN936A6B	WASHER ----------	4	
	AN340B6	NUT ----------	4	
		---*---		
-40	S1305-8	TACHOMETER ----------	1	B
	S1305-9	TACHOMETER 260 HP ----------	1	M
	S1305-11	TACHOMETER 300 HP ----------	1	N
		ATTACHING PARTS		
	S1021Z6-12	SCREW ----------	4	
	NAS430D1-20	SPACER ----------	4	
	AN936A6B	WASHER ----------	4	
	AN340-6	NUT ----------	4	
		---*---		
	S1605-3	SHAFT-TACHOMETER ----------	1	
		ATTACHING PARTS		
	S1485D4U	CLAMP ATTACH SHAFT AT FIREWALL ----------	1	
	S1021Z8-6	SCREW ----------	1	
		---*---		
-41	S1393-1	GAGE-FUEL FLOW 260 HP WHEN EXHAUSTED USE C662010-0102 ---	1	M
		ATTACHING PARTS		
	S1021Z6-12	SCREW ----------	4	C
	NAS395-4-3	NUT ----------	4	C
		---*---		
		CARBURETOR AIR TEMPERATURE GAGE INSTALLATION ----------	NP	B
-42	S1311-1	GAGE-CARBURETOR AIR ----------	1	B
		ATTACHING PARTS		
	0411897-3	COVER-ADAPTOR ----------	1	B
	AN5078632R12	SCREW ----------	8	B
	AN936A6B	WASHER ----------	8	B
	AN34086	NUT ----------	8	B
		---*---		
	0550209-1	PROBE ----------	1	B

CONTINUED ON NEXT PAGE

FIGURE AND INDEX NO.	PART NUMBER	DESCRIPTION 1 2 3 4 5 6 7	UNITS PER ASSY	USABLE ON CODE
68A-	1213505-8	CLUSTER-INSTRUMENT WHEN EXHAUSTED USE C669502-0201 ------	1	H
	C669502-0103	CLUSTER-INSTRUMENT WHEN EXHAUSTED USE C669502-0201 ------	1	J
	C669502-0201	CLUSTER-INSTRUMENT SEE FIG 68B FOR BREAKDOWN ----------	1	J
	C669502-0104	CLUSTER-INSTRUMENT 300 HP WHEN ----------	1	N
		EXHAUSTED USE C669502-0202		
	C669502-0202	CLUSTER-INSTRUMENT 300 HP SEE FIG 68B FOR BREAKDOWN -	1	N
		ATTACHING PARTS		
	S1021Z8-20	SCREW ----------	2	
	NAS395-13-3	NUT ----------	2	
	0713762-1	SUPPORT ----------	2	
		---*---		
	G815825	COVER & LENS ASSEMBLY SW ----------	1	
	2182D-R	BULB GE ----------	6	
-43	G441304	GAGE-FUEL SW WHEN EXHAUSTED USE G441344 ----------	2	
-44	G440404	AMMETER SW WHEN EXHAUSTED USE G440437 ----------	1	
-45	G444619	GAGE-OIL PRESSURE SW WHEN EXHAUSTED USE G444627 ---	1	
-46	G442697	GAGE-OIL TEMP SW WHEN EXHAUSTED USE G442785 -------	1	P
	G442698	GAGE-OIL TEMP SW 300 HP WHEN ----------	1	N
		EXHAUSTED USE G442786		
-47	G442702	GAGE-CYL HEAD TEMP SW ----------	1	
	811542	POTENTIOMETER SW ----------	1	
	S1372-1	SENDING UNIT-CYL HEAD TEMP ----------	1	
	110691	WIRE-CYL HEAD TEMP GAGE TO SENDING UNIT ----------	AR	
		50 IN LG BULK ITEM		
	1270479-1	LIGHT ASSEMBLY-INST CLUSTER INCLUDES BULB, BASE & WIRE --	1	
		USED WITH C669502-0201 & C669502-0202 ONLY		
	S1894-3	BULB RED ----------	4	
-48	C668501-0101	INDICATOR-POWER ECONOMY ----------	1	Q
	C668501-0201	INDICATOR-POWER ECONOMY ----------	1	R
		ATTACHING PARTS		
	0411897-3	ADAPTER ----------	1	
	AN5078632R12	SCREW ----------	4	
	AN5078632R6	SCREW ----------	4	
	AN34086	NUT ----------	8	
		---*---		
	C668501-0104	LEAD-THERMOCOUPLE POWER ECONOMY INDICATOR ----------	1	Q
	C668501-0206	LEAD-THERMOCOUPLE POWER ECONOMY INDICATOR ----------	1	R
		ATTACHING PARTS		
	AN742D12	CLAMP ----------	1	C
	S1486DG2U	CLAMP ----------	1	C
	S1021Z8-8	SCREW ----------	1	C
		---*---		
-49	0713128-1	LEVER ASSEMBLY ----------	1	
-50	S1249-1	KNOB ----------	1	
-51	S1241-9	CONTROL ASSEMBLY-FUEL SHUT OFF ----------	1	C
-52	S1234-1	CONTROL ASSEMBLY-MIXTURE ----------	1	B
	S1220-4	CONTROL ASSEMBLY-MIXTURE ----------	1	C
-53	S1223-5	CONTROL ASSEMBLY-PROP PITCH ----------	1	
-54	S1222-13	CONTROL ASSEMBLY-THROTTLE ----------	1	B
	S1294-1	CONTROL ASSEMBLY-THROTTLE ----------	1	C
-55	S1230-6	CONTROL ASSEMBLY-CARBURETOR HEAT ----------	1	B
-56	S1230-6	CONTROL ASSEMBLY-INDUCTION AIR ----------	1	C
-57	S1241-3	CONTROL ASSEMBLY-CABIN HEAT ----------	1	
-58	0513039-7	LIGHTER ASSEMBLY-CIGAR ----------	1	
	L4858-1	PLUG-HEATING CUE ----------	1	
	S1240-6	KNOB-CIGAR LIGHTER ----------	1	
	60232-1	CIRCUIT BREAKER-CIGAR LIGHTER CUE ----------	1	F
-59	S1239-25	CONTROL ASSEMBLY-CABIN AIR ----------	1	
-60	S1239-4	CONTROL ASSEMBLY-STRAINER DRAIN REF S1239-19 ----------	1	
	S1239-24	CONTROL ASSEMBLY-STRAINER DRAIN FLOATPLANE ----------	1	
-61	0311538-12	PRIMER ASSEMBLY WHEN EXHAUSTED USE C291502-0101 ---------	1	
	S1240-5	KNOB-PRIMER ----------	1	
-62	S1668-1	RELAY ----------	1	T

CONTINUED ON NEXT PAGE

FIGURE AND INDEX NO.	PART NUMBER	DESCRIPTION 1 2 3 4 5 6 7	UNITS PER ASSY	USABLE ON CODE
68A-63	1570043-1	DIODE BOARD ASSEMBLY	1	T
		TRUE AIRSPEED INSTALLATION	NP	F
-64	C661010-0201	INDICATOR-AIRSPEED	1	D
	C661010-0207	INDICATOR-AIRSPEED	1	E
-65	0700189-2	RING ASSEMBLY-T.A.S. WEU 0700189-9	1	F
-66	0700162-3	SPACER .051 THICK	AR	F
	0700162-4	SPACER .063 THICK	AR	F
	0700162-6	SPACER .071 THICK	AR	F
	0700162-7	SPACER .040 THICK	AR	F
-67	0700162-1	RETAINER ASSEMBLY-T.A.S.	1	F
		ATTACHING PARTS		
-68	AN51586R16	SCREW	4	F
		---*---		
-69	0700167-2	PLACARD-FUEL FLOW 300 HP	1	N
-70	SEE FIG 68D	SWITCH & CIRCUIT BREAKER INSTALLATION	1	
-71	XH99608F1099	PLUG BUTTON UC	1	

NOTE. *THIS PART NUMBER MUST HAVE A SECOND DASH NUMBER ADDED TO DENOTE COLOR. REFER TO HOW TO ORDER INTERIOR PARTS-PAGE XIII.

A---SERIAL 18051446 THRU 18051875
SERIAL 185-0777 THRU 185-1300
B---SERIAL 18051446 THRU 18051875
C---SERIAL 185-0777 THRU 185-1300
D---SERIAL 18051608 THRU 18051875
E---SERIAL 185-0968 THRU 185-1300
F---SERIAL 18051608 THRU 18051875
SERIAL 185-0968 THRU 185-1300
G---SERIAL 18051764 THRU 18051875
SERIAL 185-1113 THRU 185-1300
H---SERIAL 18051446 THRU 18051484
SERIAL 185-0777 THRU 185-0800
J---SERIAL 18051485 THRU 18051875
SERIAL 185-0801 THRU 185-1149 260 HP ONLY
K---SERIAL 18051446 THRU 18051607
L---SERIAL 185-0777 THRU 185-0967
M---SERIAL 185-0777 THRU 185-1149 260 HP ONLY
N---SERIAL 185-0968 THRU 185-1300 300 HP ONLY
P---SERIAL 18051446 THRU 18051875
SERIAL 185-0777 THRU 185-1149 260 HP ONLY
Q---SERIAL 18051446 THRU 18051771
SERIAL 185-0777 THRU 185-1116
R---SERIAL 18051772 THRU 18051875
SERIAL 185-1117 THRU 185-1300
S---SERIAL 18051446 THRU 18051774
SERIAL 185-0777 THRU 185-1149
T---SERIAL 18051775 THRU 18051875
SERIAL 185-1150 THRU 185-1300
U---SERIAL 18051446 THRU 18051774
V---SERIAL 185-0777 THRU 185-1149
W---SERIAL 18051775 THRU 18051875
X---SERIAL 185-1150 THRU 185-1300
Y---SERIAL 18051446 THRU 18051763
SERIAL 185-0777 THRU 185-1112
Z---SERIAL 18051446 THRU 18051823
SERIAL 185-0777 THRU 185-1197 & 185-1200

FIGURE AND INDEX NO.	PART NUMBER		DESCRIPTION 1 2 3 4 5 6 7	UNITS PER ASSY	USABLE ON CODE
68B-			INSTRUMENT PANEL EQUIPMENT INSTALLATION	NP	A
- 1	0700193-2		PANEL ASSEMBLY-STATIONARY	1	M
	0700193-16		PANEL ASSEMBLY-STATIONARY	1	N
- 2	0713755-7		ANGLE	1	
- 3	0713755-8		SUPPORT-LH	1	
- 4	0713755-9		SUPPORT-RH	1	
- 5	0713755-10		ANGLE-LH	1	
	0713755-11		ANGLE-RH	1	
- 6	0713755-4		PLATE ASSEMBLY	2	
	0713127-1		BRACKET-COWL FLAP CONTROL	1	
- 7	0713249-1		BRACKET ASSEMBLY-RELAY	1	
- 8	0713249-2		BRACKET ASSEMBLY-DIODEBOARD	2	
	NAS697A08K		NUTPLATE	1	
- 9	0713755-15		PANEL-SHOCK		
			ATTACHING PARTS	8	
-10	0411059-3		FLEX MOUNT	16	
-11	AN936A8		WASHER	16	
-12	AN340B8		NUT	2	
-13	0413247		STRAP-GROUND		
			---*---	1	
-14	0713764-16	¤	COVER-SHOCK PANEL		
			ATTACHING PARTS	8	
-15	0513351-1		SCREW POST		
			---*---	1	
-16	0813569-1		RETAINER-COMPASS CARD		
			ATTACHING PARTS	2	
	S1022Z4-6B		SCREW	2	
	NAS446-1-3		NUT		
			---*---	1	
-17	0713028-8		CORRECTION CARD	1	
	0713028-3		COVER-CORRECTION CARD	1	AE
-18	0513311-1	¤	SUPPORT ASSEMBLY-CONTROL TUBE LH	1	AF
	0513311-7	¤	SUPPORT ASSEMBLY-CONTROL TUBE LH	1	
-18A	0513311-2	¤	SUPPORT ASSEMBLY-CONTROL TUBE RH		
			ATTACHING PARTS	4	
	AN51586R8		SCREW	4	
	AN340B6		NUT		
			---*---	2	
	0513056-3		GROMMET	1	
-19	0713871-1	¤	COVER-RADIO	1	AJ
-20	0713764-12	¤	COVER-INSTRUMENT PANEL RH 180	1	AA
	0713764-14	¤	COVER-INSTRUMENT PANEL RH 185	1	AB
	0713764-22	¤	COVER-INSTRUMENT PANEL RH 185	1	AH
	0713764-23	¤	COVER-INSTRUMENT PANEL RH 180 & 185		
			ATTACHING PARTS	5	
-21	0513351-1		SCREW POST	5	
	AN515-8R7		SCREW	5	
	AN936A8		WASHER	5	
	AN340B8		NUT		
			---*---	1	E
-22	0713887-1		EYEBROW-INSTRUMENT PANEL	1	E
	0713888-1		SUPPORT-EYEBROW	1	AC
	0713872-9	¤	COVER ASSEMBLY-UPPER	1	AD
	0713957-2		EYEBROW ASSEMBLY-INSTRUMENT PANEL		
			ATTACHING PARTS	1	E
	0713889-1	¤	RETAINER-EYEBROW	11	
	S1023A4-8B		SCREW		
			---*---	1	AD
-22A	0713958-1	¤	COVER-SWITCH PANEL	1	H
-23	0700195-3	¤	COVER-STATIONARY PANEL LOWER 180	1	K
	0700195-6	¤	COVER-STATIONARY PANEL LOWER 180	1	Z
	0700195-12	¤	COVER-STATIONARY PANEL LOWER 180	1	J
	0700195-1	¤	COVER-STATIONARY PANEL LOWER 185	1	L
	0700195-4	¤	COVER-STATIONARY PANEL LOWER 185	1	X
	0700195-8	¤	COVER-STATIONARY PANEL LOWER 185	1	Y
	0700195-11	¤	COVER-STATIONARY PANEL LOWER 185		
-24	SEE FIG 69A		GLOVE BOX INSTALLATION	NP	
-25	CA2		CIRCUIT BREAKER MTCC	1	
			ATTACHING PARTS		
-26	AN515-6R8		SCREW	2	
	AN936A6		WASHER	2	
			---*---		

CONTINUED ON NEXT PAGE

Instruments (Cont)

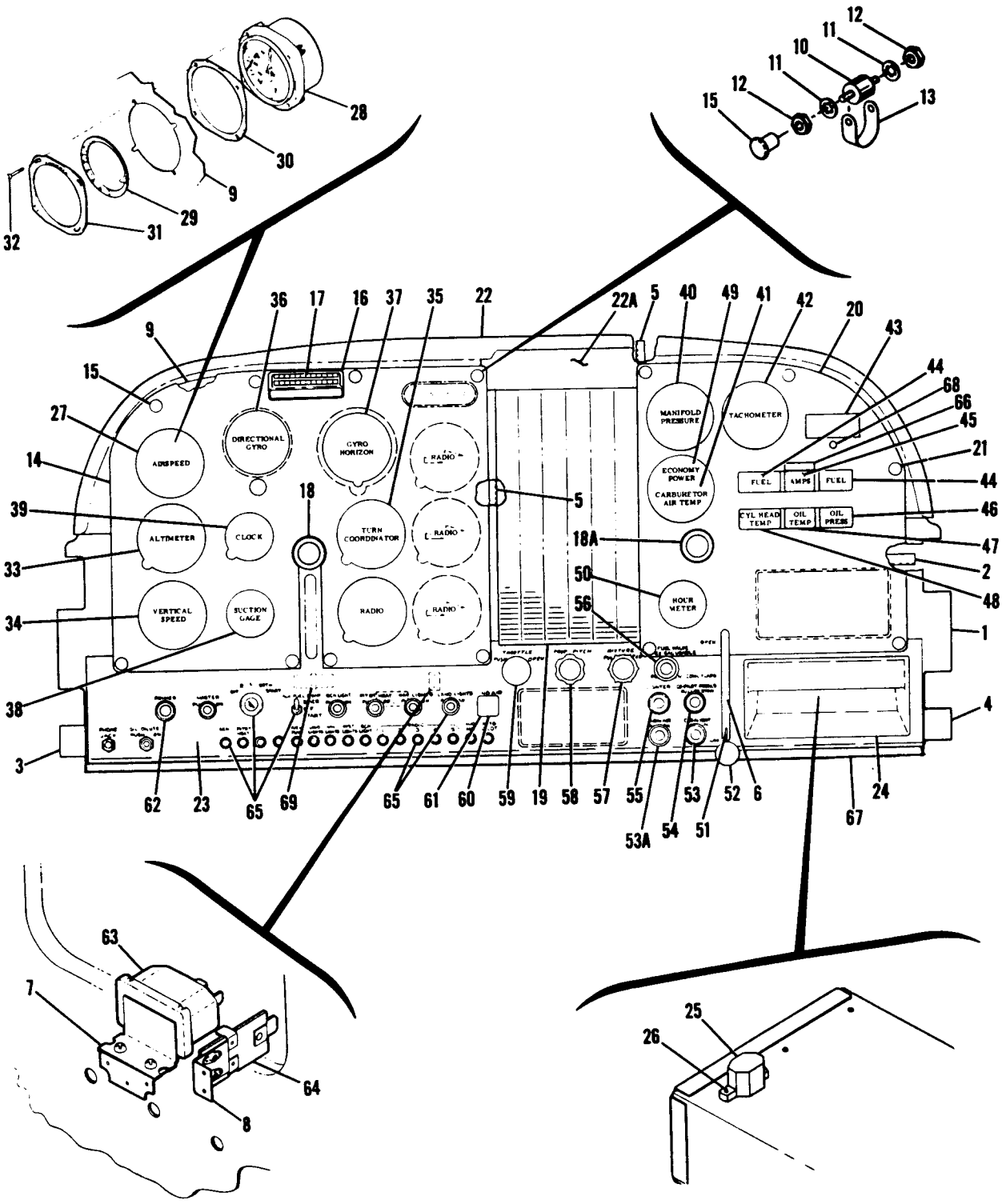

SERIAL 18051876 THRU 18052284
SERIAL 185-1301 THRU 18502090

Figure 68B. Instrument Panel Equipment Installation

FIGURE AND INDEX NO.	PART NUMBER	DESCRIPTION 1 2 3 4 5 6 7	UNITS PER ASSY	USABLE ON CODE
688-27	S1470N6	INDICATOR-AIRSPEED WEU C661060-0105	1	AJ
	C661060-0105	INDICATOR-AIRSPEED	1	AK
	S1471N9	INDICATOR-AIRSPEED WEU C661060-0202	1	AL
	C661060-0202	INDICATOR-AIRSPEED	1	AM
	S1388N2	INDICATOR-AIRSPEED METRIC MARKINGS 185	1	C
	S1387N2	INDICATOR-AIRSPEED METRIC MARKINGS 180	1	B
	S1387N3	INDICATOR-AIRSPEED METRIC MARKINGS 180	1	B
		TRUE AIRSPEED INSTALLATION	NP	
-28	C661010-0201	INDICATOR-AIRSPEED WEU C661061-0206	1	AJ
	C661061-0206	INDICATOR-AIRSPEED	1	AK
	C661010-0207	INDICATOR-AIRSPEED WEU C661061-0202	1	AL
	C661061-0202	INDICATOR-AIRSPEED	1	AM
-29	0700189-9	RING ASSEMBLY-T.A.S.	1	
-30	0700162-3	SPACER .051 THICK	AR	
	0700162-4	SPACER .063 THICK	AR	
	0700162-6	SPACER .071 THICK	AR	
	0700162-7	SPACER .040 THICK	AR	
-31	0700162-1	RETAINER ASSEMBLY-T.A.S.	1	
		ATTACHING PARTS		
-32	AN515B6R16	SCREW	4	
		---*---		
-33	C661012-0101	ALTIMETER-18,000 FT FOR VFR APPLICATIONS ONLY	1	
	C661011-0105	ALTIMETER-20,000 FT SENSITIVE WEU C661071-0101	1	AG
	C661071-0101	ALTIMETER-20,000 FT SENSITIVE	1	AH
	C661011-0106	ALTIMETER-20,000 FT FEET-MILLIBARS WEU C661071-0102	1	AG
	C661071-0102	ALTIMETER-20,000 FT FEET/MILLIBARS	1	AH
	S1384N1	ALTIMETER METRIC MARKINGS	1	
-34	S1304N2	INDICATOR-VERTICAL SPEED WEU C661080-0101	1	AG
	S1392N2	INDICATOR-VERTICAL SPEED ALT WEU C661080-0101	1	AG
	C661080-0101	INDICATOR-VERTICAL SPEED	1	AH
	CM2647N2	INDICATOR-VERTICAL SPEED METRIC MARKINGS 185	1	C
	CM2647N1	INDICATOR-VERTICAL SPEED METRIC MARKINGS 180	1	B
		ATTACHING PARTS		
	AN515B6R12	SCREW	4	
		---*---		
-35	C661003-0201	INDICATOR-TURN COORDINATOR WEU C661003-0501	1	D
	C661003-0501	INDICATOR-TURN COORDINATOR WEU C661003-0504	1	G
	C661003-0504	INDICATOR-TURN COORDINATOR	1	AH
	TVA-1315	CAPACITOR INSTALLED ACROSS POWER PLUG	1	
	2904-1	INDICATOR-TURN COORDINATOR BTID USED WITH WING LEVELER INSTALLATION ONLY	1	AG
	604-200-200	INDICATOR-TURN COORDINATOR BTID USED WITH WING LEVELER INSTALLATION ONLY	1	AH
	S1413N1	INDICATOR-TURN & BANK WEU S1413N2	1	AG
	S1413N2	INDICATOR-TURN & BANK	1	AH
-36	C661002-0501 *	GYRO-DIRECTIONAL WEU C661002-0505	1	V
	C661002-0505 *	GYRO-DIRECTIONAL WEU C661075-0102	1	W
	C661075-0102 *	GYRO-DIRECTIONAL	1	AH
	C661002-0301 *	GYRO-DIRECTIONAL WEU C661075-0104	1	AG
	C661075-0104 *	GYRO-DIRECTIONAL	1	AH
	C661002-0503 *	GYRO-DIRECTIONAL WEU C661002-0506	1	V
	C661002-0506 *	GYRO-DIRECTIONAL WEU C661075-0103	1	W
	C661075-0103 *	GYRO-DIRECTIONAL	1	AH
	C661002-0504 *	GYRO-DIRECTIONAL WEU C661075-0101	1	AG
	C661075-0101 *	GYRO-DIRECTIONAL	1	AH
	30370-0100	GYRO-DIRECTIONAL USED WITH NAVO-MATIC 300 & 400 ARC - WEU 30370-0102	1	AG
	30370-0102	GYRO-DIRECTIONAL USED WITH NAVO-MATIC 300 ARC	1	AH
-37	C661001-0501 **	GYRO-HORIZON WEU C661001-0505	1	V
	C661001-0505 **	GYRO-HORIZON WEU C661076-0104	1	W
	C661076-0104 **	GYRO-HORIZON	1	AH
	C661001-0502 **	GYRO-HORIZON WEU C661076-0101	1	AG
	C661076-0101 **	GYRO-HORIZON	1	AH
	C661001-0503 **	GYRO-HORIZON WEU C661076-0102	1	AG
	C661076-0102 **	GYRO-HORIZON	1	AH
	C661001-0504 **	GYRO-HORIZON WEU C661076-0103	1	AG
	C661076-0103 **	GYRO-HORIZON	1	AH
	37570-0001	GYRO-HORIZON USED WITH NAVO-MATIC 400 ARC	1	E
		ATTACHING PARTS		
	AN507-632R8	SCREW	4	
		---*---		

CONTINUED ON NEXT PAGE

FIGURE AND INDEX NO.	PART NUMBER	DESCRIPTION 1 2 3 4 5 6 7	UNITS PER ASSY	USABLE ON CODE
68B-38	S1414N1	GAGE-SUCTION WEU C668540-0101	1	AG
	C668540-0101	GAGE-SUCTION	1	AH
		ATTACHING PARTS		
	AN5078632R12	SCREW	4	
		---*---		
-39	S1317N2	CLOCK-ELECTRIC WEU C664508-0101	1	AG
	C664508-0101	CLOCK-ELECTRIC	1	AH
		ATTACHING PARTS		
	AN515B6R12	SCREW	2	
		---*---		
-40	S1301-1	GAGE-MANIFOLD PRESSURE WEU C662035-0101	1	AJ
	C662035-0101	GAGE-MANIFOLD PRESSURE	1	AK
	C662001-0104	GAGE-MANIFOLD PRESSURE & FUEL FLOW WEU C662001-0204	1	D
	C662001-0204	GAGE-MANIFOLD PRESSURE & FUEL FLOW WEU C662037-0103	1	AN
	C662037-0103	GAGE-MANIFOLD PRESSURE & FUEL FLOW	1	AM
		ATTACHING PARTS		
	AN5078632R12	SCREW	4	
	AN936A6B	WASHER	4	
	AN340B6	NUT	4	
		---*---		
		CARBURETOR AIR TEMPERATURE GAGE INSTALLATION	NP	B
-41	S1311-1	GAGE-CARBURETOR AIR TEMP WEU S1311-3	1	AJ
	S1311-3	GAGE-CARBURETOR AIR TEMP	1	AK
		ATTACHING PARTS		
	0411897-3	COVER-ADAPTOR	1	B
	AN5078632R12	SCREW	8	B
	AN936A6B	WASHER	8	B
	AN340B6	NUT	8	B
		---*---		
	0550209-1	PROBE	1	B
-42	S1305-8	TACHOMETER WEU C668020-0104	1	AJ
	C668020-0104	TACHOMETER	1	AK
	S1305-11	TACHOMETER WEU C668020-0107	1	AL
	C668020-0107	TACHOMETER	1	AM
		ATTACHING PARTS		
	AN5078632R12	SCREW	4	
	NAS43DD1-20	SPACER	4	
	AN936A6B	WASHER	4	
	AN340B6	NUT	4	
		---*---		
	S1605-3	SHAFT-TACHOMETER	1	
		ATTACHING PARTS		
	S1485D4U	CLAMP ATTACH SHAFT AT FIREWALL	1	
	S1021Z8-6	SCREW	1	
		---*---		
-43	0700167-2	PLACARD-FUEL FLOW WHEN EXHAUSTED USE 0705005-1	1	D
	0705005-1	PLACARD-FUEL FLOW	1	F
	C669502-0201	CLUSTER-INSTRUMENT WITHOUT LIGHTS	1	B
	C669502-0202	CLUSTER-INSTRUMENT WITHOUT LIGHTS	1	C
		ATTACHING PARTS		
	S1021Z8-20	SCREW	2	
	NAS395-13-3	NUT	2	
	0713762-1	SUPPORT	2	
		---*---		
	G818827	COVER & LENS ASSEMBLY SW	1	
-44	G441344	GAGE-FUEL SW	2	
-45	G440437	AMMETER SW	1	
-46	G444627	GAGE-OIL PRESSURE SW	1	
-47	G442785	GAGE-OIL TEMPERATURE SW	1	B
	G442786	GAGE-OIL TEMPERATURE SW	1	C
-48	G442702	GAGE-CYL HEAD TEMP SW	1	
	811542	POTENTIOMETER SW	1	
	S1372-1	SENDING UNIT-CYL HEAD TEMP	1	
	110691	WIRE-CYL HEAD TEMP GAGE TO SENDING UNIT	AR	
		50 IN LG BULK ITEM		
	1270479-1	LIGHT ASSEMBLY-INST CLUSTER INCLUDES BULB, BASE & WIRE	1	
	S1894-3	BULB RED	4	
		CONTINUED ON NEXT PAGE		

FIGURE AND INDEX NO.	PART NUMBER	DESCRIPTION 1 2 3 4 5 6 7	UNITS PER ASSY	USABLE ON CODE
68B-49	C668501-0207	INDICATOR-POWER ECONOMY WEU C668501-0211	1	AG
	C668501-0211	INDICATOR-POWER ECONOMY	1	AH
		ATTACHING PARTS		
	0411897-3	ADAPTER	1	
	AN5078632R12	SCREW	4	
	AN5078632R6	SCREW	4	
	AN340B6	NUT	8	
		---*---		
	C668501-0206	LEAD-THERMOCOUPLE POWER ECONOMY INDICATOR	1	
		ATTACHING PARTS		
	AN742D12	CLAMP	1	C
	S1486DG2U	CLAMP	1	C
	S1021Z8-8	SCREW	1	C
		---*---		
-50	C664501-0101	HOURMETER WEU C664501-0103	1	AG
	C664501-0103	HOURMETER	1	AH
		ATTACHING PARTS		
	0411897-3	ADAPTOR	1	
	AN515-6R6	SCREW	8	
	NAS679A06	NUT	8	
		---*---		
-51	0713128-1	LEVER ASSEMBLY	1	
-52	S1249-1	KNOB	1	
-53	S1239-31	CONTROL ASSEMBLY-CABIN HEAT	1	M
	S1239-48	CONTROL ASSEMBLY-CABIN HEAT	1	N
-53A	S1239-37	CONTROL ASSEMBLY-CABIN AIR	1	M
	S1239-46	CONTROL ASSEMBLY-CABIN AIR	1	N
-54	1260458-6	CONTROL ASSEMBLY-DISENGAGING RUDDER PEDALS	1	M
	1260458-7	CONTROL ASSEMBLY-DISENGAGING RUDDER PEDALS	1	N
-55	0513039-7	LIGHTER ASSEMBLY-CIGAR	1	
	L4858-1	PLUG-HEATING CUE	1	
	S1752-2	KNOB	1	M
	S1982-1	KNOB	1	N
	60232-1	CIRCUIT BREAKER-CIGAR LIGHTER	1	
-56	S1241-17	CONTROL ASSEMBLY-FUEL SHUT OFF	1	J
	S1241-38	CONTROL ASSEMBLY-FUEL SHUT OFF	1	L
-57	S1234-6	CONTROL ASSEMBLY-MIXTURE	1	B
	S1220-9	CONTROL ASSEMBLY-MIXTURE WEU C299507-0201	1	R
	C299507-0201	CONTROL ASSEMBLY-MIXTURE	1	S
	C299507-0401	CONTROL ASSEMBLY-MIXTURE	1	AP
-58	S1223-8	CONTROL ASSEMBLY-PROP PITCH WEU C299506-0103	1	T
	C299506-0103	CONTROL ASSEMBLY-PROP PITCH	1	U
	C299506-0201	CONTROL ASSEMBLY-PROP PITCH	1	AP
-59	S1222-16	CONTROL ASSEMBLY-THROTTLE WEU C299505-0201S	1	P
	C299505-0201S	CONTROL ASSEMBLY-THROTTLE	1	Q
	S1294-2	CONTROL ASSEMBLY-THROTTLE WEU C299505-0301	1	R
	C299505-0301	CONTROL ASSEMBLY-THROTTLE	1	S
	C299505-0501	CONTROL ASSEMBLY-THROTTLE	1	AP
-60	S1230-11	CONTROL ASSEMBLY-CARBURETOR HEAT	1	B
-61	S1791-1	VALVE-WING LEVELER	1	
		ATTACHING PARTS		
	0713026-6	NUT	1	
		---*---		
	S1760-1	KNOB	1	
-62	C291502-0101	PRIMER ASSEMBLY	1	M
	C291502-0103	PRIMER ASSEMBLY	1	N
	S1752-1	KNOB-PRIMER	1	M
	S1974-1	KNOB-PRIMER	1	N
-63	S1668-1	RELAY	1	
-64	1570043-1	DIODE BOARD ASSEMBLY	1	
-65		SWITCH & CIRCUIT BREAKER INSTALLATION SEE FIG 68C & 68D -	1	N
-66	0505020-2	PLACARD-MASTER SWITCH	1	AD
-67	0715019-1	PAD-LOWER INSTRUMENT PANEL	1	AD
		ATTACHING PARTS		
	S1021Z6-10	SCREW	6	AD
	S1066-1	WASHER	6	AD
		---*---		

CONTINUED ON NEXT PAGE

FIGURE AND INDEX NO.	PART NUMBER	DESCRIPTION 1 2 3 4 5 6 7	UNITS PER ASSY	USABLE ON CODE
68A-68	S2135-1	LIGHT ASSEMBLY-OVERVOLTAGE	1	AH
-69	C593001-0101	SENSOR-OVERVOLTAGE	1	AH
		ATTACHING PARTS		
	S1693-2	STA STRAP	1	AH
		---*---		
		NOTE. ¤THIS PART NUMBER MUST HAVE A SECOND DASH NUMBER ADDED TO DENOTE COLOR. REFER TO HOW TO ORDER INTERIOR PARTS-PAGE XIII.		
		NOTE. *THESE GYROS ARE PHYSICALLY & FUNCTIONALLY INTERCHANGABLE.		
		NOTE. **THESE GYROS ARE PHYSICALLY & FUNCTIONALLY INTERCHANGABLE.		
		A---SERIAL 18051876 THRU 18052284		
		SERIAL 185-1301 THRU 18502090		
		B---SERIAL 18051876 THRU 18052284		
		C---SERIAL 185-1301 THRU 18502090		
		D---SERIAL 185-1301 THRU 185-1447		
		E---SERIAL 18051876 THRU 18051993		
		SERIAL 185-1301 THRU 185-1447		
		F---SERIAL 185-1448 THRU 18502090		
		G---SERIAL 18051994 THRU 18501934		
		SERIAL 185-1448 THRU 18052221		
		H---SERIAL 18051876 THRU 18052103		
		J---SERIAL 185-1301 THRU 185-1599		
		K---SERIAL 18052104 THRU 18052175		
		L---SERIAL 18501600 THRU 18501679		
		M---SERIAL 18051876 THRU 18052103		
		SERIAL 185-1301 THRU 185-1599		
		N---SERIAL 18052104 THRU 18052284		
		SERIAL 18501600 THRU 1850290		
		P---SERIAL 18051876 THRU 18052155		
		Q---SERIAL 18052156 THRU 18052284		
		R---SERIAL 185-1301 THRU 18501766		
		S---SERIAL 18501767 THRU 18502007, 18502026, 18502027		
		T---SERIAL 18051876 THRU 18052155		
		SERIAL 185-1301 THRU 18501766		
		U---SERIAL 18052156 THRU 18052284		
		SERIAL 18501767 THRU 18502007, 18502026, 18502027		
		V---SERIAL 18051876 THRU 18052163		
		SERIAL 185-1301 THRU 18501797		
		W---SERIAL 18052164 THRU 18052221		
		SERIAL 18501798 THRU 18501934		
		X---SERIAL 18501680 THRU 18501733		
		Y---SERIAL 18501733 THRU 18502090		
		Z---SERIAL 18052176 THRU 18052284		
		AA---SERIAL 185-1301 THRU 18501679		
		AB---SERIAL 18501680 THRU 18501934		
		AC---SERIAL 18051994 THRU 18052175		
		SERIAL 185-1448 THRU 18501832		
		AD---SERIAL 18052176 THRU 18052284		
		SERIAL 18501833 THRU 18502090		
		AE---SERIAL 18051876 THRU 18052196		
		SERIAL 185-1301 THRU 18501877		
		AF---SERIAL 18052197 THRU 18052284		
		SERIAL 18501878 THRU 18502090		
		AG---SERIAL 18051876 THRU 18052221		
		SERIAL 185-1301 THRU 18501934		
		AH---SERIAL 18052222 THRU 18052284		
		SERIAL 18501935 THRU 18502090		
		AJ---SERIAL 18051876 THRU 18052221		
		AK---SERIAL 18052222 THRU 18052284		
		AL---SERIAL 185-1301 THRU 18501934		
		AM---SERIAL 18501935 THRU 18502090		
		AN---SERIAL 185-1448 THRU 18501934		
		AP---SERIAL 18502008 THRU 18502025, 18502028 THRU 18502090		

FIGURE AND INDEX NO.	PART NUMBER	DESCRIPTION 1 2 3 4 5 6 7	UNITS PER ASSY	USABLE ON CODE
68C-		INSTRUMENT PANEL EQUIPMENT INSTALLATION	NP	A
- 1	0713965-2	PANEL ASSEMBLY-STATIONARY	1	
- 2	0713755-7	ANGLE	1	
- 3	0713755-8	SUPPORT-LH	1	
- 4	0713755-9	SUPPORT-RH	1	
- 5	0713755-10	ANGLE-LH	1	
- 6	0713755-11	ANGLE-RH	1	
- 7	S2163-1	FASTENER-VELCRO	5	
- 8	S2163-3	FASTENER-VELCRO	1	
- 9	0713755-4	PLATE ASSEMBLY	1	
	0713127-1	BRACKET-COWL FLAP CONTROL	2	
-10	0713249-1	BRACKET ASSEMBLY-RELAY	1	
-11	0713249-2	BRACKET ASSEMBLY-DIODEBOARD	1	
	NAS697A08K	NUTPLATE	2	
-12	0713967-1	PANEL ASSEMBLY-SHOCK	1	
		ATTACHING PARTS		
-13	1213645-1	SHOCKMOUNT	8	
-14	AN936A8	WASHER	16	
-15	AN34088	NUT	16	
-16	0413247	STRAP-GROUND	2	
		---*---		
-17	0713968-1 ¤	COVER ASSEMBLY-SHOCK PANEL	1	
-18	1213004-2	RETAINER-AIRCRAFT IDENTIFICATION PLACARD	1	
		ATTACHING PARTS		
	S1022Z6-8B	SCREW	2	
	NAS446-2-1	NUT	2	
		---*---		
-18A	1213379-4	POST LIGHT ASSY	1	
-19	0513311-7 ¤	SUPPORT ASSEMBLY-CONTROL TUBE LH	1	
-20	0513311-2 ¤	SUPPORT ASSEMBLY-CONTROL TUBE RH	1	
		ATTACHING PARTS		
	AN515B6R8	SCREW	4	
	AN34086	NUT	4	
		---*---		
	0513056-3	GROMMET	2	
-21	0713871-1 ¤	COVER-RADIO	1	
-22	0713968-2 ¤	COVER ASSEMBLY-INSTRUMENT PANEL RH	1	
-22A	1213379-4	POST LIGHT ASSY	1	
-23	0713957-2	EYEBROW ASSEMBLY-INSTRUMENT PANEL	1	
-24	0713958-5 ¤	COVER-SWITCH PANEL	1	
-25	0713966-1 ¤	COVER-STATIONARY PANEL LOWER 185	1	C
	0713966-3 ¤	COVER-STATIONARY PANEL LOWER 180	1	B
-26	SEE FIGURE 69A	GLOVE BOX INSTALLATION	NP	
-27	CA2	CIRCUIT BREAKER MTCC	1	
		ATTACHING PARTS		
-28	AN515-6R8	SCREW	2	
	AN936A6	WASHER	2	
		---*---		
-29	C661060-0111	INDICATOR-AIRSPEED 180	1	B
	C661060-0210	INDICATOR-AIRSPEED 185	1	C
	S1388N2	INDICATOR-AIRSPEED METRIC MARKINGS 185	1	C
	S1387N2	INDICATOR-AIRSPEED METRIC MARKINGS 180	1	B
	S1387N3	INDICATOR-AIRSPEED METRIC MARKINGS 180	1	B
		TRUE AIRSPEED INSTALLATION	NP	
-30	C661061-0211	INDICATOR-AIRSPEED 180	1	B
	C661061-0210	INDICATOR-AIRSPEED 185	1	C
-31	0700189-9	RING ASSEMBLY-T.A.S.	1	
-32	0700162-3	SPACER .051 THICK	AR	
	0700162-4	SPACER .063 THICK	AR	
	0700162-6	SPACER .071 THICK	AR	
	0700162-7	SPACER .040 THICK	AR	
-33	0700162-1	RETAINER ASSEMBLY-T.A.S.	1	
		ATTACHING PARTS		
-34	AN51586R16	SCREW	4	
		---*---		
-35	C661012-0101	ALTIMETER-18,000 FT FOR VFR APPLICATIONS ONLY	1	
	C661071-0101	ALTIMETER-20,000 FT SENSITIVE	1	
	C661071-0102	ALTIMETER-20,000 FT FEET/MILLIBARS	1	
	C661025-0102	ALTIMETER-35,000 FT FEET/MILLIBARS	1	D
	S1384N1	ALTIMETER METRIC MARKINGS	1	

CONTINUED ON NEXT PAGE

Instruments (Cont)

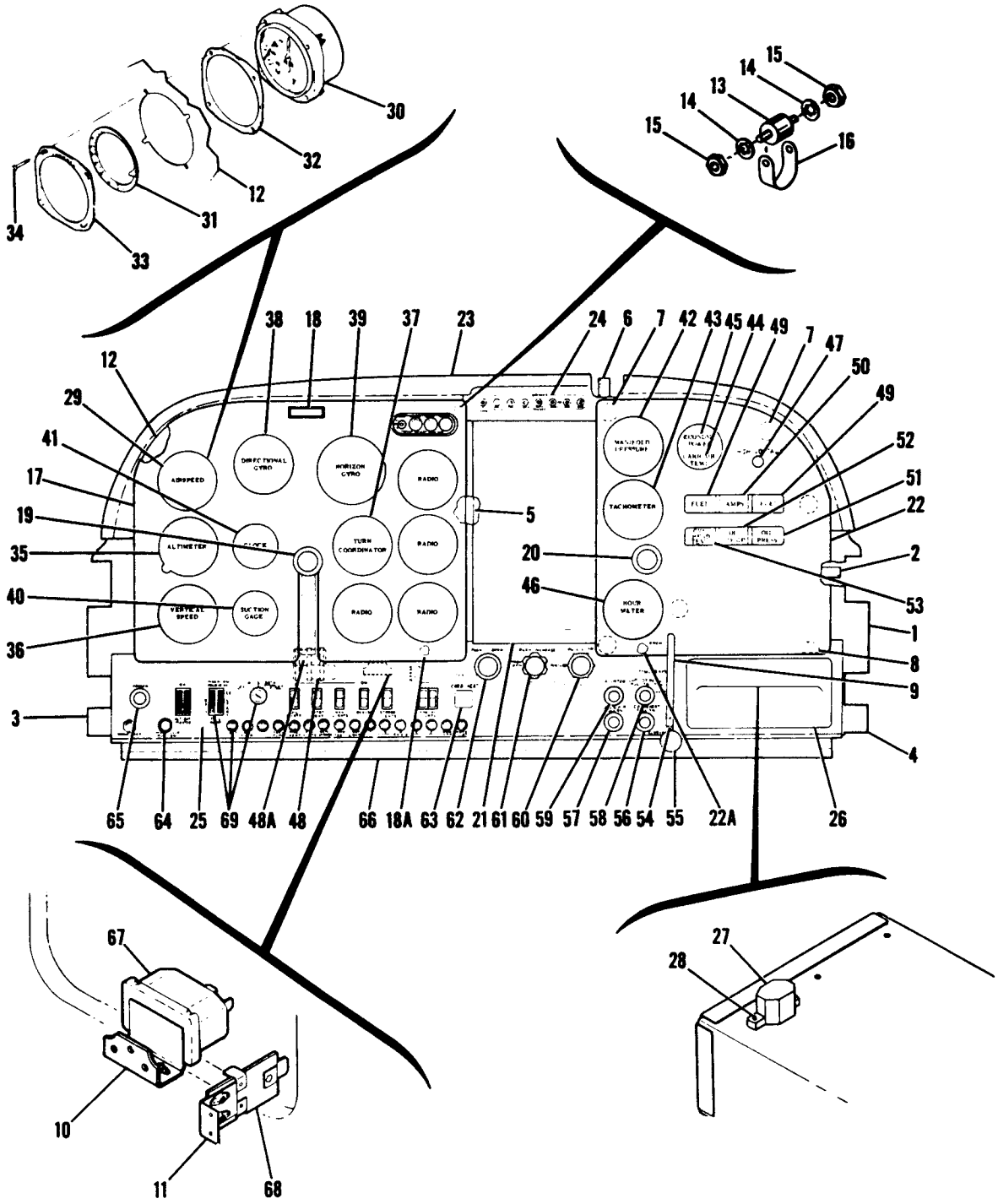

SERIAL 18502091 THRU 18502310
SERIAL 18052285 THRU 18052384

Figure 68C. Instrument Panel Equipment Installation

FIGURE AND INDEX NO.	PART NUMBER	DESCRIPTION 1 2 3 4 5 6 7	UNITS PER ASSY	USABLE ON CODE
68C-36	C661080-0101	INDICATOR-VERTICAL SPEED	1	
	CM2647N1	INDICATOR-VERTICAL SPEED METRIC MARKINGS 185	1	C
	CM2647N2	INDICATOR-VERTICAL SPEED METRIC MARKINGS 180	1	B
		ATTACHING PARTS		
	AN515B6R12	SCREW	4	
		---*---		
-37	C661003-0504	INDICATOR-TURN COORDINATOR	1	
	604-200-200	INDICATOR-TURN COORDINATOR BTID USED WITH WING LEVELER INSTALLATION ONLY	1	
	S1413N2	INDICATOR-TURN & BANK	1	
-38	C661075-0102 *	GYRO-DIRECTIONAL	1	
	C661075-0104 *	GYRO-DIRECTIONAL	1	
	C661075-0103 *	GYRO-DIRECTIONAL	1	
	C661075-0101 *	GYRO-DIRECTIONAL	1	
	40760-0104	GYRO-DIRECTIONAL USED WITH NAVO-MATIC 300 ARC	1	
-39	C661076-0104 **	GYRO-HORIZON	1	
	C661076-0101 **	GYRO-HORIZON	1	
	C661076-0102 **	GYRO-HORIZON	1	
	C661076-0103 **	GYRO-HORIZON	1	
		ATTACHING PARTS		
	AN507-632R8	SCREW	4	
		---*---		
-40	C668540-0101	GAGE-SUCTION	1	
		ATTACHING PARTS		
	AN507B632R12	SCREW	4	
		---*---		
-41	C664508-0101	CLOCK-ELECTRIC	1	
		ATTACHING PARTS		
	AN515B6R12	SCREW	2	
		---*---		
-42	C662035-0101	GAGE-MANIFOLD PRESSURE 180	1	B
	C662037-0103	GAGE-MANIFOLD PRESSURE & FUEL FLOW 185	1	C
		ATTACHING PARTS		
	AN515B6R16	SCREW	4	
		---*---		
-43	C668020-0104	TACHOMETER	1	B
	C668020-0107	TACHOMETER	1	C
		ATTACHING PARTS		
	AN507B632R12	SCREW	4	
	NAS43DD1-20	SPACER	4	
	AN936A6B	WASHER	4	
	AN340B6	NUT	4	
		---*---		
	S1605-3	SHAFT-TACHOMETER	1	
		ATTACHING PARTS		
	S1485D4U	CLAMP ATTACH SHAFT AT FIREWALL	1	
	S1021Z8-6	SCREW	1	
		---*---		
-44	S1311-3	GAGE-CARBURETOR AIR TEMP	1	B
		ATTACHING PARTS		
	AN507B632R12	SCREW	4	B
	AN936A6B	WASHER	4	B
	AN340B6	NUT	4	B
		---*---		
	0550209-1	PROBE	1	B
-45	C668501-0211	INDICATOR-POWER ECONOMY	1	
		ATTACHING PARTS		
	AN507B632R12	SCREW	4	
	AN340B6	NUT	4	
		---*---		
	C668501-0206	LEAD-THERMOCOUPLE POWER ECONOMY INDICATOR	1	
		ATTACHING PARTS		
	AN742D12	CLAMP	1	C
	S1486DG2U	CLAMP	1	C
	S1021Z8-8	SCREW	1	C
		---*---		
-46	C664501-0103	HOURMETER	1	
		ATTACHING PARTS		
	0411897-3	ADAPTOR	1	
	AN515-6R6	SCREW	8	
	NAS679A06	NUT	8	
		---*---		

CONTINUED ON NEXT PAGE

FIGURE AND INDEX NO.	PART NUMBER	DESCRIPTION 1 2 3 4 5 6 7	UNITS PER ASSY	USABLE ON CODE
68C-47	S2135-1	LIGHT ASSEMBLY-OVERVOLTAGE	1	
-48	C593001-0101	SENSOR-OVERVOLTAGE	1	
-48A	TVA-1315	CAPACITOR	1	
		ATTACHING PARTS		
	S1693-2	STA STRAP	1	
		---*---		
	C669502-0201	CLUSTER-INSTRUMENT WITHOUT LIGHTS	1	B
	C669502-0202	CLUSTER-INSTRUMENT WITHOUT LIGHTS	1	C
		ATTACHING PARTS		
	S1021Z8-20	SCREW	2	
	NAS395-13-3	NUT	2	
	0713762-1	SUPPORT	2	
		---*---		
	G818827	COVER & LENS ASSEMBLY SW	1	
-49	G441344	GAGE-FUEL SW	2	
-50	G440437	AMMETER SW	1	
-51	G444627	GAGE-OIL PRESSURE SW	1	
-52	G442785	GAGE-OIL TEMPERATURE SW	1	B
	G442786	GAGE-OIL TEMPERATURE SW	1	C
-53	G442702	GAGE-CYL HEAD TEMP SW	1	
	811542	POTENTIOMETER SW	1	
	S1372-1	SENDING UNIT-CYL HEAD TEMP	1	
	110691	WIRE-CYL HEAD TEMP GAGE TO SENDING UNIT 50 IN LG BKI-	AR	
	1270479-1	LIGHT ASSEMBLY-INST CLUSTER INCLUDES BULB, BASE & WIRE	1	
	S1894-3	BULB RED	4	
-54	0713128-1	LEVER ASSEMBLY-COWL FLAPS	1	
-55	S1249-1	KNOB	1	
-56	S1239-48	CONTROL ASSEMBLY-CABIN HEAT	1	
-57	S1239-46	CONTROL ASSEMBLY-CABIN AIR	1	
-58	1260458-7	CONTROL ASSEMBLY-DISENGAGING RUDDER PEDALS	1	
-59	0513039-7	LIGHTER ASSEMBLY-CIGAR	1	
	L4858-1	PLUG-HEATING CUE	1	
	S1982-1	KNOB-CIGAR LIGHTER	1	
	60232-1	CIRCUIT BREAKER-CIGAR LIGHTER	1	
-60	S1234-6	CONTROL ASSEMBLY-MIXTURE 180	1	B
	C299507-0401	CONTROL ASSEMBLY-MIXTURE 185	1	C
-61	C299506-0103	CONTROL ASSEMBLY-PROP PITCH 180	1	B
	C299506-0201	CONTROL ASSEMBLY-PROP PITCH 185	1	C
-62	C299505-0201S	CONTROL ASSEMBLY-THROTTLE 180	1	B
	C299505-0501	CONTROL ASSEMBLY-THROTTLE 185	1	C
-63	S1230-11	CONTROL ASSEMBLY-CARBURETOR HEAT	1	B
-64	S1791-1	VALVE-WING LEVELER	1	
		ATTACHING PARTS		
	0713026-6	NUT	1	
		---*---		
	S1760-1	KNOB	1	
-65	C291502-0103	PRIMER ASSEMBLY	1	
	S1974-1	KNOB-PRIMER	1	
-66	0715029-2	KNEE PADDING-INSTRUMENT PANEL	1	
		ATTACHING PARTS		
	S1021A6-10	SCREW	5	
	S1066-1	WASHER	5	
		---*---		
	S1899-6G	POST LIGHT ASSY	1	
	MS25237-330	BULB	1	
-67	S1668-1	RELAY	1	
-68	1570043-1	DIODE BOARD ASSEMBLY	1	
-69	SEE FIG	SWITCH & CIRCUIT BREAKER INSTALLATION	1	

NOTE. ¤THIS PART NUMBER MUST HAVE A SECOND DASH NUMBER ADDED TO DENOTE COLOR. REFER TO HOW TO ORDER INTERIOR PARTS-PAGE XIII.

NOTE. *THESE GYROS ARE PHYSICALLY & FUNCTIONALLY INTERCHANGABLE.

NOTE. **THESE GYROS ARE PHYSICALLY & FUNCTIONALLY INTERCHANGABLE.

A---SERIAL 18052285 THRU 18052384
SERIAL 18502091 THRU 18502310
B---SERIAL 18052285 THRU 18052384
C---SERIAL 18502091 THRU 18502310
D---SERIAL 18502181 THRU 18502310
SERIAL 18052329 THRU 18052384

Instruments (Cont)

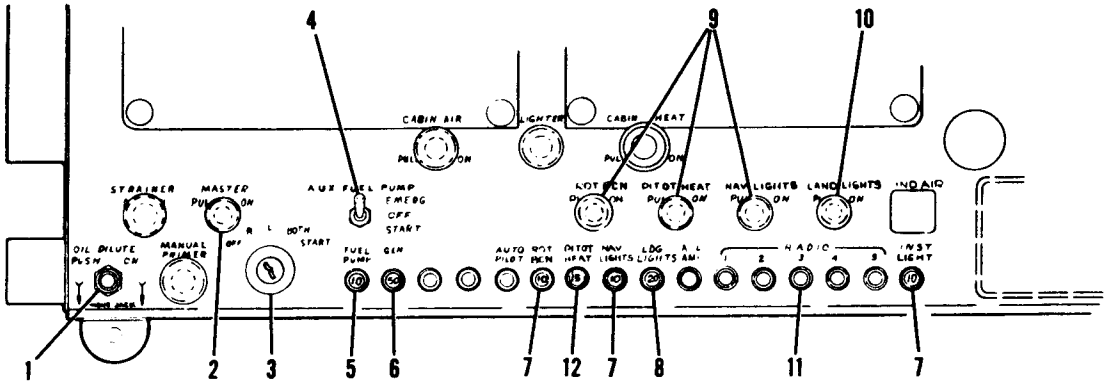

SERIAL 18051446 THRU 18051774
SERIAL 185-0777 THRU 185-1149

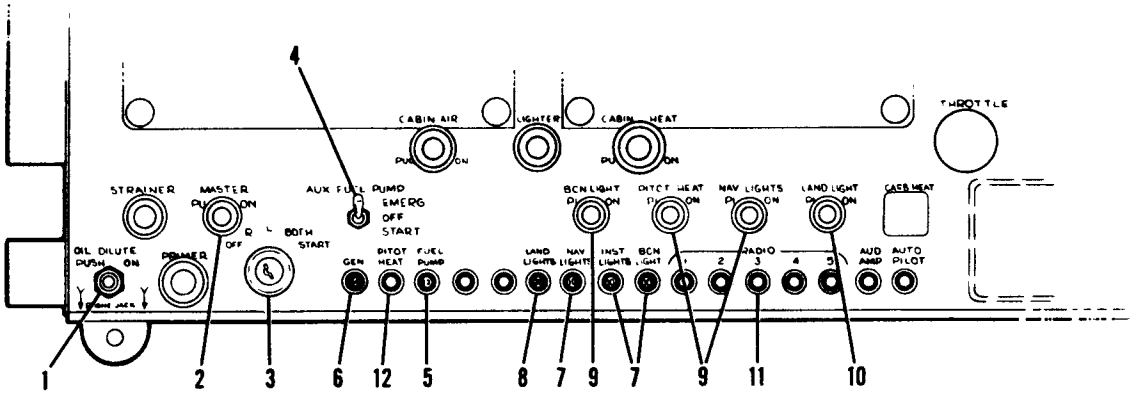

SERIAL 18051775 THRU 18051875
SERIAL 185-1150 THRU 185-1300

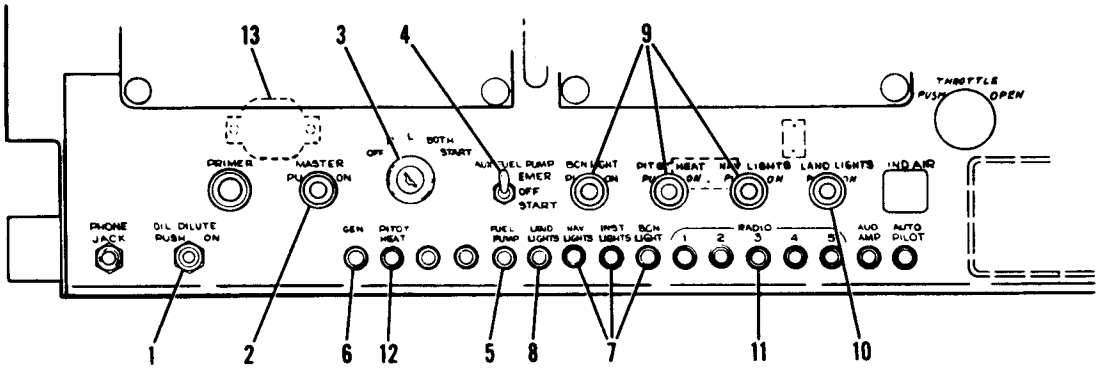

SERIAL 18051876 THRU 18052103
SERIAL 185-1301 THRU 185-1599

SERIAL 18051446 THRU 18052103
SERIAL 185-0777 THRU 185-1599

Figure 68D. Switch & Circuit Breaker Installation

FIGURE AND INDEX NO.	PART NUMBER	DESCRIPTION 1 2 3 4 5 6 7	UNITS PER ASSY	USABLE ON CODE
68D-		SWITCH & CIRCUIT BREAKER INSTALLATION	NP	A
- 1	0511063	SWITCH-OIL DILUTION	1	
	0511063-2	NUT-OIL DILUTION SWITCH	1	
- 2	0713026-5	SWITCH-MASTER	1	M
	S1416-1	KNOB-MASTER SWITCH	1	N
	S1760-3	KNOB-MASTER SWITCH	1	B
	0770719-1	DIODE ASSEMBLY MOUNTED ON BACK OF MASTER SWITCH	1	C
- 3	0713129-4 *	KIT-IGNITION SWITCH WHEN EXHAUSTED USE C292501-0102	1	D
	C292501-0102 *	KIT-IGNITION SWITCH	1	E
- 4	S392-1	SWITCH-FUEL PUMP	1	F
- 5	S1360-10	CIRCUIT BREAKER 10 AMP	1	G
	S1232-10	CIRCUIT BREAKER 10 AMP	1	G
	054624-3	BUSHING USED WITH S1232 CIRCUIT BREAKER ONLY	1	H
- 6	S1360-50	CIRCUIT BREAKER 50 AMP	1	B
	S1596-60	CIRCUIT BREAKER 60 AMP	3	K
- 7	S1360-10	CIRCUIT BREAKER 10 AMP	3	L
	S1232-10	CIRCUIT BREAKER 10 AMP	1	K
- 8	S1360-20	CIRCUIT BREAKER 20 AMP	1	L
	S1232-20	CIRCUIT BREAKER 20 AMP	5	L
	054624-3	BUSHING USED WITH S1232 CIRCUIT BREAKERS ONLY	3	
- 9	0713026-4	SWITCH-BCN LIGHT, NAV LIGHTS, & PITOT HEAT	3	M
	0713303-2	KNOB-SWITCH	3	N
	S1760-1	KNOB-SWITCH	1	
-10	0713035	SWITCH-LANDING LIGHTS	1	M
	0713303-2	KNOB-SWITCH	1	N
	S1760-1	KNOB-SWITCH	1	H
	0713751-1	BUS BAR	1	J
	0770102-1	BUS BAR	1	D
	0770104-1	BUS BAR-INBOARD AUTO PILOT & RADIOS	1	D
	0770104-2	BUS BAR-OUTBOARD	NP	
-11		RADIO INSTALLATIONS SEE ELECTRONICS MANUAL	1	K
-12	S1360-15	CIRCUIT BREAKER 15 AMP	1	L
	S1232-15	CIRCUIT BREAKER 15 AMP	1	N
-13	CA2	CIRCUIT BREAKER MTCC		
		ATTACHING PARTS		
	AN507-832R8	SCREW	2	N
		---*---		

NOTE. *THIS KIT ALSO INCLUDES TWO DOOR LOCKS & KEYS

A---SERIAL 18051446 THRU 18052103
SERIAL 185-0777 THRU 185-1599
B---SERIAL 18051608 THRU 18052103
SERIAL 185-0968 THRU 185-1599
C---SERIAL 18051446 THRU 18051774
SERIAL 185-0777 THRU 185-1149
D---SERIAL 18051775 THRU 18052103
SERIAL 185-1150 THRU 185-1599
E---SERIAL 185-0777 THRU 185-1599
F---SERIAL 185-0777 THRU 185-1073,
185-1111 THRU 185-1599
G---SERIAL 185-1074 THRU 185-1110
H---SERIAL 18051446 THRU 18051607
SERIAL 185-0777 THRU 185-0967
J---SERIAL 18051608 THRU 18051774
SERIAL 185-0968 THRU 185-1149
K---SERIAL 18051446 THRU 18051716,
18051751 THRU 18052103
SERIAL 185-0777 THRU 185-1073,
185-1111 THRU 185-1599
L---SERIAL 18051717 THRU 18051750
SERIAL 185-1074 THRU 185-1110
M---SERIAL 18051446 THRU 18051875
SERIAL 185-0777 THRU 185-1300
N---SERIAL 18051876 THRU 18052103
SERIAL 185-1301 THRU 185-1599

Instruments (Cont)

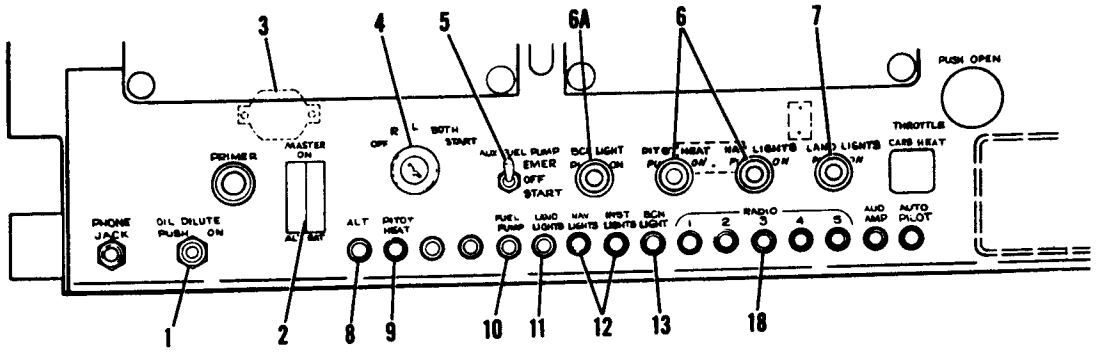

SERIAL 18052104 THRU 18052175
SERIAL 18501600 THRU 18501832

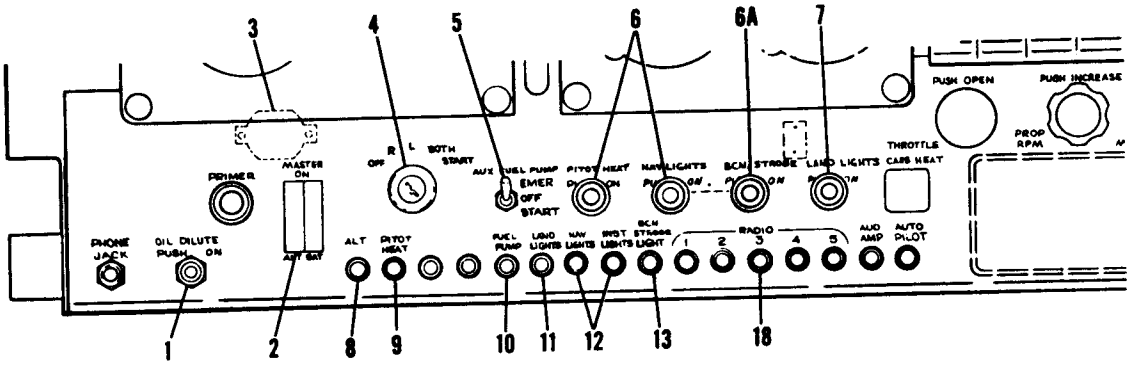

SERIAL 18052176 THRU 18052284
SERIAL 18501833 THRU 18502090

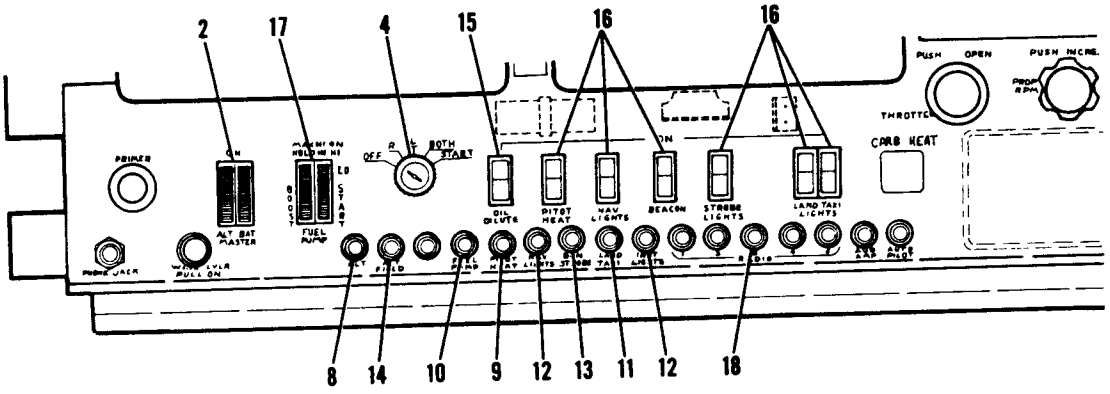

SERIAL 18052285 THRU 18052384
SERIAL 18502091 THRU 18502310

SERIAL 18052104 THRU 18052384
SERIAL 18501600 THRU 18502310

Figure 68E. Switch & Circuit Breaker Installation

FIGURE AND INDEX NO.	PART NUMBER	DESCRIPTION 1 2 3 4 5 6 7	UNITS PER ASSY	USABLE ON CODE
68E-		SWITCH & CIRCUIT BREAKER INSTALLATION	NP	A
- 1	0511063	SWITCH-OIL DILUTION	1	F
	0511063-2	NUT-OIL DILUTION SWITCH	1	F
- 2	S1994-1-1	SWITCH-MASTER	1	
	0770719-2	DIODE ASSEMBLY MOUNTED ON BACK OF MASTER SWITCH	1	
- 3	CA2	CIRCUIT BREAKER MTC	1	F
		ATTACHING PARTS		
	AN507-832R8	SCREW	2	F
		---+---		
- 4	C292501-0102 *	KIT-IGNITION SWITCH WEU C292501-0104	1	K
	C292501-0104 *	KIT-IGNITION SWITCH	1	L
	3A4F	DIODE MOUNTED ON BACK OF IGNITION SWITCH	1	E
- 5	S392-1	SWITCH-FUEL PUMP	1	G
- 6	0713026-4	SWITCH-NAV LIGHTS & PITOT HEAT	2	F
	S1981-1	KNOB-SWITCH	2	F
- 6A	0713026-4	SWITCH-BEACON LIGHT ONLY	1	F
	0713035	SWITCH-BEACON/STROBE LIGHT	1	H
	S1981-1	KNOB-SWITCH	1	F
- 7	0713035	SWITCH-LANDING LIGHTS	1	F
	S1981-1	KNOB-SWITCH	1	F
- 8	S1596-60L	CIRCUIT BREAKER 60 AMP	1	
- 9	S1360-15L	CIRCUIT BREAKER 15 AMP	1	
-10	S1360-10L	CIRCUIT BREAKER 10 AMP	1	B
-11	S1360-20L	CIRCUIT BREAKER 20 AMP	1	
-12	S1360-10L	CIRCUIT BREAKER 10 AMP	2	
-13	S1360-10L	CIRCUIT BREAKER 10 AMP BCN LIGHT ONLY	1	
	S1360-5L	CIRCUIT BREAKER 5 AMP STROBE LIGHT ONLY	1	D
	S1360-15L	CIRCUIT BREAKER 15 AMP BCN/STROBE LIGHT	1	C
-14	S1360-5L	CIRCUIT BREAKER 5 AMP	1	E
	S2122-1	NUT-CIRCUIT BREAKER BLACK	AR	
	S2122-2	NUT-CIRCUIT BREAKER BRIGHT	AR	
-15	S2160-3	SWITCH-OIL DILUTE	1	E
-16	S2160-1	SWITCH	6	E
-17	S2055-1-1	SWITCH-FUEL BOOST	1	J
	0770104-1	BUS BAR-INBOARD AUTOPILOT & RADIOS	1	F
	0770104-3	BUS BAR-INBOARD AUTOPILOT & RADIOS	1	E
	0770104-2	BUS BAR-OUTBOARD	1	F
	0770104-4	BUS BAR-OUTBOARD	1	E
-18		RADIO INSTALLATIONS SEE ELECTRONICS MANUAL	NP	

NOTE. *THIS KIT ALSO INCLUDES TWO DOOR LOCKS & KEYS

A---SERIAL 18052104 THRU 18052384
SERIAL 18501600 THRU 18502310
B---SERIAL 18501600 THRU 18502310
C---SERIAL 18052176 THRU 18052384
SERIAL 18501833 THRU 18502310
D---SERIAL 18052176 THRU 18052384
E---SERIAL 18052285 THRU 18052384
SERIAL 18502091 THRU 18502310
F---SERIAL 18052104 THRU 18052284
SERIAL 18501600 THRU 18502090
G---SERIAL 18501600 THRU 18502090
H---SERIAL 18052176 THRU 18052284
SERIAL 18501833 THRU 18502090
J---SERIAL 18502091 THRU 18502310
K---SERIAL 18052104 THRU 18052316
SERIAL 18501600 THRU 18502153
L---SERIAL 18052317 THRU 18052384
SERIAL 18502154 THRU 18502310

Instruments (Cont)

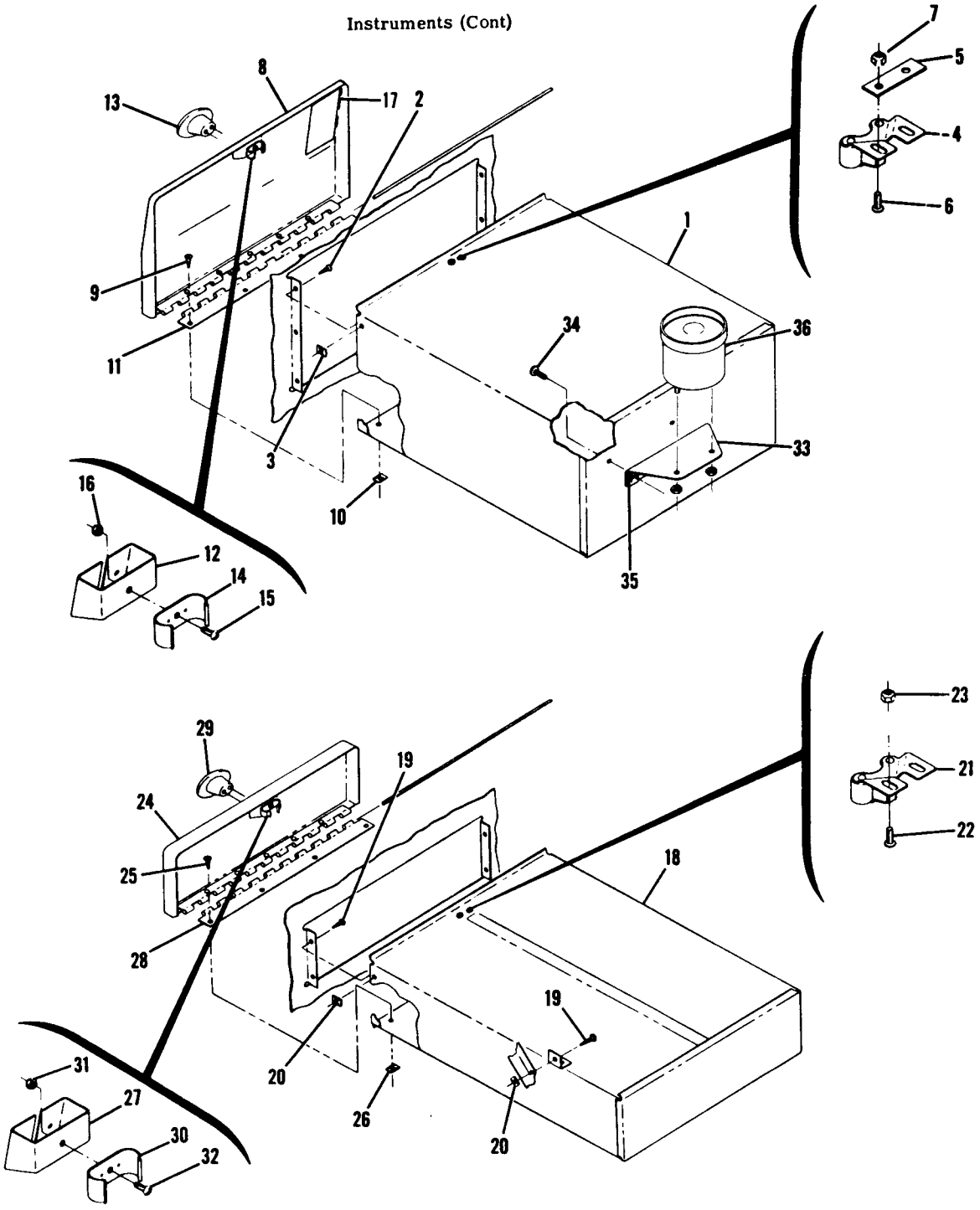

SERIAL 185-0001 THRU 185-0776
SERIAL 18051184 THRU 18051445

Figure 69. Glove Box & Map Case Installation

FIGURE AND INDEX NO.	PART NUMBER	DESCRIPTION 1 2 3 4 5 6 7	UNITS PER ASSY	USABLE ON CODE
69 -		GLOVE BOX & MAP CASE INSTALLATION	NP	G
- 1	0713514-1	BOX ASSEMBLY-GLOVE	1	
		ATTACHING PARTS		
- 2	S1021Z6-6	SCREW	4	
- 3	NAS446-3-3	NUT	4	
		---*---		
- 4	0713009-2	CATCH-DOOR	1	
		ATTACHING PARTS		
- 5	0713517-1	SPACER	1	
- 6	AN515-6R8	SCREW	2	
- 7	NAS679A06	NUT	2	
		---*---		
- 8	0713514-13-279	DOOR ASSEMBLY-GLOVE BOX	1	A
	0713514-19-279	DOOR ASSEMBLY-GLOVE BOX	1	B
	0713514-16-418	DOOR ASSEMBLY-GLOVE BOX	1	J
	0713514-6-418	DOOR ASSEMBLY-GLOVE BOX	1	H
		ATTACHING PARTS		
- 9	S1021Z6-6	SCREW	5	
-10	NAS446-3-3	NUT	5	
		---*---		
-11	0713515-1	HINGE ASSEMBLY	1	
-12	0713516-1	BRACKET-DOOR CATCH	1	
-13	0713303-7	KNOB	1	
		ATTACHING PARTS		
	AN515-6R6	SCREW	1	
		---*---		
-14	0713009-1	CLIP-DOOR CATCH	1	
		ATTACHING PARTS		
-15	AN515-6R4	SCREW	1	
-16	NAS679A06	NUT	1	
		---*---		
	0700064-1	PLACARD	1	C
	0513220-14	LETTERING-SKYWAGON	1	C
	0513220-2	INITIAL-S	1	
	0513220-3	INITIAL-K	1	
	0513220-4	INITIAL-Y	1	
	0513220-9	INITIAL-W	1	
	0513220-6	INITIAL-A	1	
	0513220-11	INITIAL-G	1	
	0513220-12	INITIAL-O	1	
	0513220-13	INITIAL-N	1	
	0713724-1	MEDALLION-CESSNA ANNIVERSARY MODEL	1	B
-17	0713210-16	PLACARD-TIRE & OIL	1	C
	0713210-11	PLACARD-TIRE & OIL	1	E
-18	0713503-25	CASE ASSEMBLY-MAP	1	
		ATTACHING PARTS		
-19	S1021Z6-6	SCREW	5	
-20	NAS446-3-3	NUT	5	
		---*---		
-21	0713009-2	CATCH-DOOR	1	
		ATTACHING PARTS		
-22	AN515-6R4	SCREW	2	
-23	NAS679A06	NUT	2	
		---*---		
-24	0713521-6-279	DOOR ASSEMBLY-MAP CASE	1	A
	0713521-7-279	DOOR ASSEMBLY-MAP CASE	1	B
	0713521-7-418	DOOR ASSEMBLY-MAP CASE	1	D
		ATTACHING PARTS		
-25	S1021Z6-6	SCREW	5	
-26	NAS446-3-3	NUT	5	
		---*---		

CONTINUED ON NEXT PAGE

FIGURE AND INDEX NO.	PART NUMBER	DESCRIPTION 1 2 3 4 5 6 7	UNITS PER ASSY	USABLE ON CODE
69 -27	0713503-7	BRACKET-DOOR CATCH	1	
-28	0713503-16	HINGE ASSEMBLY	1	
-29	0713303-7	KNOB	1	
		ATTACHING PARTS		
	AN515-6R6	SCREW	2	
		---*---	1	
-30	0713009-1	CLIP-DOOR CATCH	1	
		ATTACHING PARTS		
-31	NAS679A06	NUT	1	
-32	AN515-6R4	SCREW	1	
		---*---	1	F
	0700104-24	RUG-GLOVE BOX SOUNDPROOFING	1	F
	0700104-25	RUG-MAP CASE SOUNDPROOFING	1	
-33	0713738-3 *	BRACKET ASSEMBLY-STALL WARNING		
		ATTACHING PARTS	2	
-34	S1021Z8-6	SCREW		
		---*---	2	
-35	NAS395-12-3	NUT	1	
-36	S2077-5	HORN ASSEMBLY-STALL WARNING		

NOTE. *WHEN ORDERING THIS PART FOR AIRCRAFT SERIALS 185-0001 THRU 185-0725 & 18051184 THRU 18051390 ALSO ORDER BRACKET MARKED*.

A---SERIAL 185-0001 THRU 185-0237
B---SERIAL 185-0238 THRU 185-0512
C---SERIAL 185-0001 THRU 185-0776
D---SERIAL 185-0513 THRU 185-0776
SERIAL 18051184 THRU 18051445
E---SERIAL 18051184 THRU 18051312
F---SERIAL 185-0654 THRU 185-0776
SERIAL 18051184 THRU 18051445
G---SERIAL 185-0001 THRU 185-0776
SERIAL 18051184 THRU 18051445
H---SERIAL 18051184 THRU 18051445
J---SERIAL 185-0513 THRU 185-0776

Instruments (Cont)

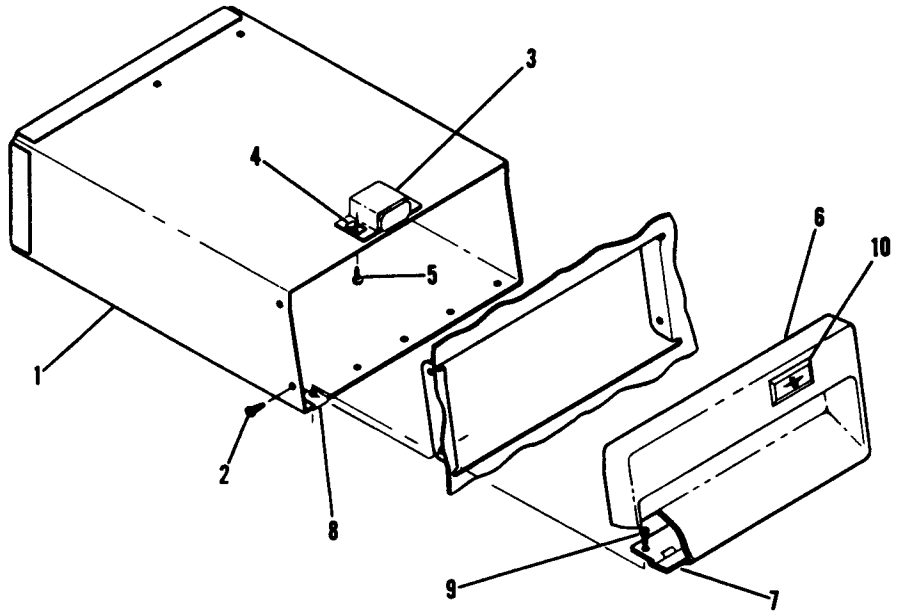

SERIAL 18051446 THRU 18052384
SERIAL 185-0777 THRU 18502310

Figure 69A. Glove Box Installation

FIGURE AND INDEX NO.	PART NUMBER	DESCRIPTION 1 2 3 4 5 6 7	UNITS PER ASSY	USABLE ON CODE
69A-		GLOVE BOX INSTALLATION	NP	A
- 1	0713758-12	BOX ASSEMBLY-GLOVE	1	
		ATTACHING PARTS		
- 2	S1021Z6-6	SCREW	4	
		---*---		
- 3	S1895-1	MAGNETIC CATCH	1	
- 4	S1021Z6-8	SCREW	2	
- 5	NAS446-2-3	NUT	2	
- 6	0713758-4 ¤	DOOR ASSEMBLY-GLOVE BOX	1	B
	0713875-1 ¤	DOOR ASSEMBLY-GLOVE BOX	1	C
	0713875-3 ¤	DOOR ASSEMBLY-GLOVE BOX	1	D
		ATTACHING PARTS		
- 7	S1021Z8-6	SCREW	5	
- 8	NAS395-17-3	NUT	5	
		---*---		
- 9	0713758-8	HINGE ASSEMBLY	1	
-10	0713254-4	EMBLEM	1	D
	0700756-1	BASE	1	D
	S1874-1C	NUT	2	
	0700114-55	RUG-GLOVE BOX SOUNDPROOFING	1	

NOTE. ¤THIS PART NUMBER MUST HAVE A SECOND DASH NUMBER ADDED TO DENOTE COLOR. REFER TO HOW TO ORDER INTERIOR PARTS-PAGE XIII.

A---SERIAL 18051446 THRU 18052384
SERIAL 185-0777 THRU 18502310
B---SERIAL 18051446 THRU 18051774
SERIAL 185-0777 THRU 185-1149
C---SERIAL 18051775 THRU 18051875
18052285 THRU 18052384
SERIAL 185-1150 THRU 185-1300,
18502091 THRU 18502310
D---SERIAL 18051876 THRU 18052284
SERIAL 185-1301 THRU 18502090

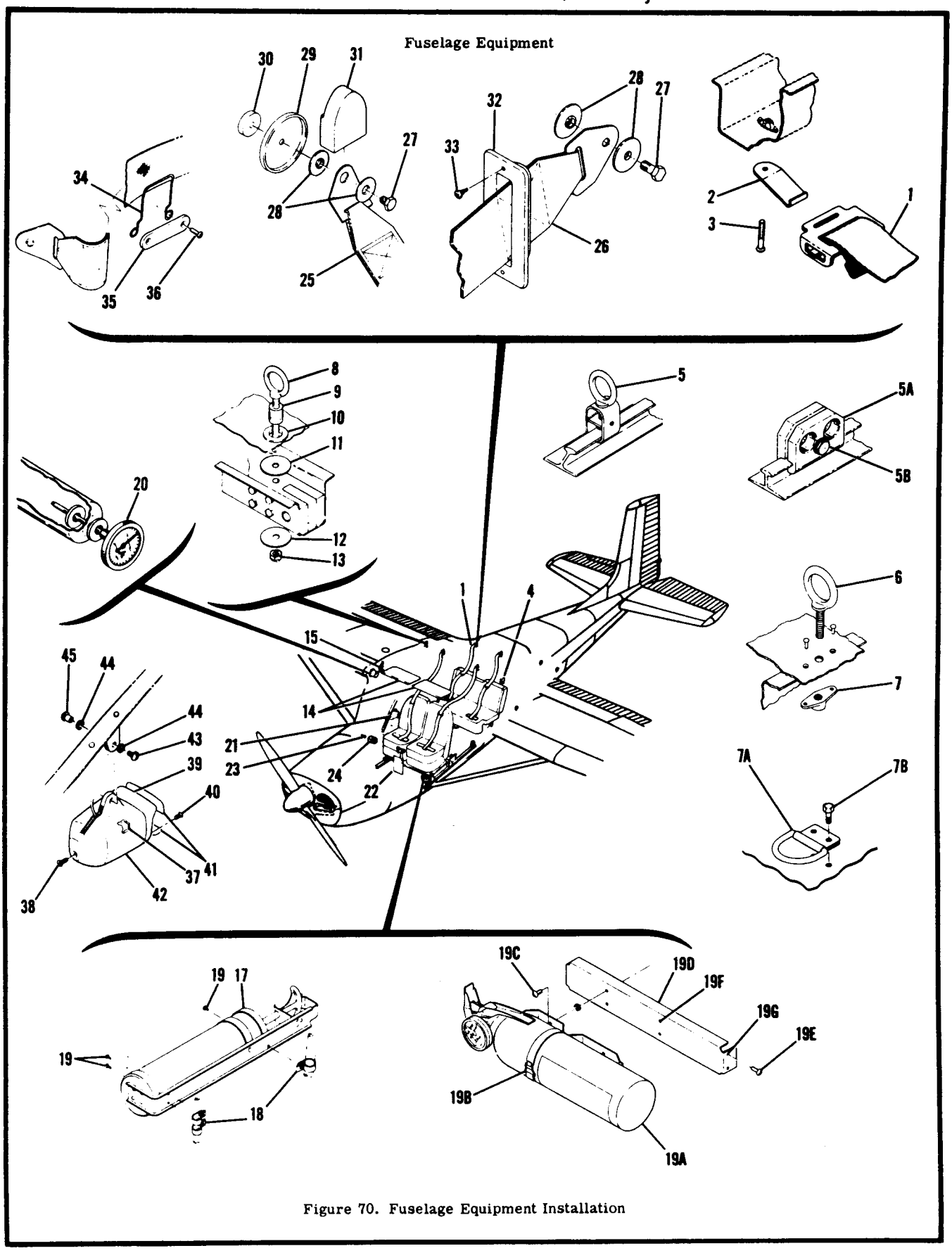

Figure 70. Fuselage Equipment Installation

FIGURE AND INDEX NO.	PART NUMBER	DESCRIPTION 1 2 3 4 5 6 7	UNITS PER ASSY	USABLE ON CODE
70 -		FUSELAGE EQUIPMENT INSTALLATION	NP	
- 1	S2029-1	HARNESS-SHOULDER	4	J
- 2	0511232-3	HOOK-SHOULDER HARNESS	4	J
		ATTACHING PARTS	1	J
- 3	NAS221-10	SCREW		
		---*---	1	
- 4	10004-98	JACK POINT-UNIVERSAL	2	
- 5	0511166	SLIDE ASSEMBLY-TIE DOWN WHEN EXHAUSTED USE 0711121-2	6	L
	0711121-2	SLIDE ASSEMBLY-TIE DOWN	6	M
- 5A	1201039-1	TIE DOWN ASSEMBLY-SEAT RAIL	1	M
- 5B	AN4-7A	BOLT	1	M
	AN960-416	WASHER	6	
- 6	0511165	RING-TIE DOWN		
		ATTACHING PARTS	6	
- 7	NAS680A4	NUTPLATE		
		---*---	2	Q
- 7A	S1939-1	CLIP & RING ASSEMBLY	4	Q
- 7B	AN3-4A	BOLT	4	
- 8	0541115-3	EYEBOLT-HOISTING	4	
- 9	0541115-2	SPACER	4	
-10	MS35489-17	GROMMET	4	
-11	0541115-4	PLATE	4	L
-12	AN970-5	WASHER	4	M
	0541115-4	PLATE	4	
-13	NAS679A5	NUT	1	A
-14	1200116-2	VISOR-SUN RH	1	A
	1200116-1	VISOR-SUN LH	1	B
	0700122-1 #	VISOR-SUN LH	1	B
	0700122-2 #	VISOR-SUN RH		
		ATTACHING PARTS	1	
-15	0713011-12	BRACKET	2	
	AN507-1032R14	SCREW		
		---*---		
-16		DELETED	1	G
-17	0800111-2	FIRE EXTINGUISHER & BRACKET	1	G
	CP2 3/4	FIRE EXTINGUISHER & BRACKET GFET ALTERNATE		
		ATTACHING PARTS	2	G
-18	S1485D4U	CLAMP	2	G
	S1485D8U	CLAMP	4	G
-19	S1021Z8-8	SCREW		
		---*---	1	H
-19A	C421001-0101	FIRE EXTINGUISHER	1	H
-19B	C421001-0102	BRACKET ASSEMBLY-FIRE EXTINGUISHER		
		ATTACHING PARTS	4	H
-19C	AN520-10R10	SCREW	4	H
	NAS43DD3-8	SPACER		
		---*---	1	H
-19D	0713945-11	BRACKET ASSEMBLY-FIRE EXTINGUISHER		
		ATTACHING PARTS	4	H
-19E	AN520-10R8	SCREW		
		---*---	4	H
-19F	NAS680A3	NUTPLATE	4	H
-19G	NAS696A3	NUTPLATE	1	
-20	C668507-0101	GAGE-OUTSIDE AIR TEMP	1	P
-21	C660501-0201	COMPASS ASSEMBLY		
		ATTACHING PARTS	1	P
	0713065	BRACKET	4	P
	AN515B632R12	SCREW		
		---*---	1	C
-22	0713227-2	LOCK-CONTROL	1	D
	0713237-3	LOCK-CONTROL	1	E
	0513385-3	LOCK-CONTROL	1	
-23	0541162-1	VALVE-TUBELESS TIRE INFLATION	1	
	10004-101	EXPANDER ASSEMBLY-TIRE	1	
-24	SEE FIG 13A	CUP-FUEL SAMPLER	1	N
	2015009-3	BAGGAGE NET	2	Q
	2015009-3	BAGGAGE NET		
		ATTACHING PARTS	4	F
	1211203-1	EYEBOLT ONLY 2 USED WITH LITTER DOOR INSTL	2	F
	0711083-1	LATCH ASSEMBLY USED WITH LITTER DOOR INSTL ONLY		
		---*---		

CONTINUED ON NEXT PAGE

FIGURE AND INDEX NO.	PART NUMBER	DESCRIPTION 1 2 3 4 5 6 7	UNITS PER ASSY	USABLE ON CODE
70 -25	S2070W201 %	HARNESS ASSEMBLY-SHOULDER PILOT & COPILOT	2	K
	S2070W207 %	HARNESS ASSEMBLY-SHOULDER MIDDLE SEATS	2	K
-26	S2070W204 %	HARNESS ASSEMBLY-SHOULDER REAR SEAT	2	K
		ATTACHING PARTS		
-27	NAS464P4A10	BOLT PILOT & COPILOT SEATS ONLY	1	K
	NAS464P4A6	BOLT MIDDLE & REAR SEATS ONLY	1	K
-28	S2074-1	SPACER	2	K
-29	1215056-2	CUP PILOT, COPILOT & MIDDLE SEATS	1	K
-30	2013131-1	SPACER PILOT, COPILOT & MIDDLE SEATS	1	K
		---*---		
-31	S2076-1	COVER-SHOULDER HARNESS PILOT, COPILOT & MIDDLE SEATS	4	K
-32	0712761-1	CUP-SHOULDER HARNESS REAR SEAT	2	K
		ATTACHING PARTS		
-33	S1021Z4-6	SCREW	2	K
		---*---		
-34	S2081-1	CLIP-HARNESS STOWAGE	6	K
-35	S2081-2	COVER-HARNESS CLIP	6	K
		ATTACHING PARTS		
-36	S1023A6-8C	SCREW	4	K
		---*---		
-37	C660501-0101	COMPASS	1	Q
		ATTACHING PARTS		
-38	AN507B832R14	SCREW	1	Q
		---*---		
-39	0413517-15	BEZEL-COMPASS	1	Q
		ATTACHING PARTS		
-40	AN51084R8	SCREW	2	Q
		---*---		
-41	0400213-6	PLACARD SET-COMPASS CORRECTION	1	Q
-42	0413517-5	CUP	1	Q
		ATTACHING PARTS		
-43	D366	SCREW	1	Q
-44	AN960D10	WASHER	2	Q
-45	D4023X.375	POST-SCREW	1	Q
		---*---		

NOTE. *THIS PART MUST HAVE A SECOND DASH NUMBER ADDED TO DENOTE COLOR. REFER TO HOW TO ORDER UPHOLSTERED PARTS-PAGE XII.

NOTE. %WHEN ORDERING SHOULDER HARNESS FOR AUSTRALIAN AIRCRAFT ADD VH TO PART NUMBER. EXAMPLE S2070W201VH.

A---SERIAL 185-0001 THRU 185-0512
B---SERIAL 185-0513 THRU 18502310
SERIAL 18051184 THRU 18052384
C---SERIAL 185-0001 THRU 185-0776
SERIAL 18051184 THRU 18051445
D---SERIAL 185-0777 THRU 185-0967
SERIAL 18051446 THRU 18051607
E---SERIAL 185-0968 THRU 18502310
SERIAL 18051608 THRU 18052384
F---SERIAL 185-1150 THRU 18502310
SERIAL 18051775 THRU 18052384
G---SERIAL 185-0001 THRU 185-1599
SERIAL 18051184 THRU 18052103
H---SERIAL 18501600 THRU 18502310
SERIAL 18052104 THRU 18052384
J---SERIAL 185-0001 THRU 18501832
SERIAL 18051184 THRU 18052175
K---SERIAL 18501833 THRU 18502310
SERIAL 18052176 THRU 18052384
L---SERIAL 185-0001 THRU 18501934
SERIAL 18051184 THRU 18052221
M---SERIAL 18501935 THRU 18502310
SERIAL 18052222 THRU 18052384
N---SERIAL 185-1150 THRU 18502090
SERIAL 18051175 THRU 18052284
P---SERIAL 185-0001 THRU 18502090
SERIAL 18051184 THRU 18052284
Q---SERIAL 18502091 THRU 18502310
SERIAL 18052285 THRU 18052384

Fuselage Equipment (Cont)

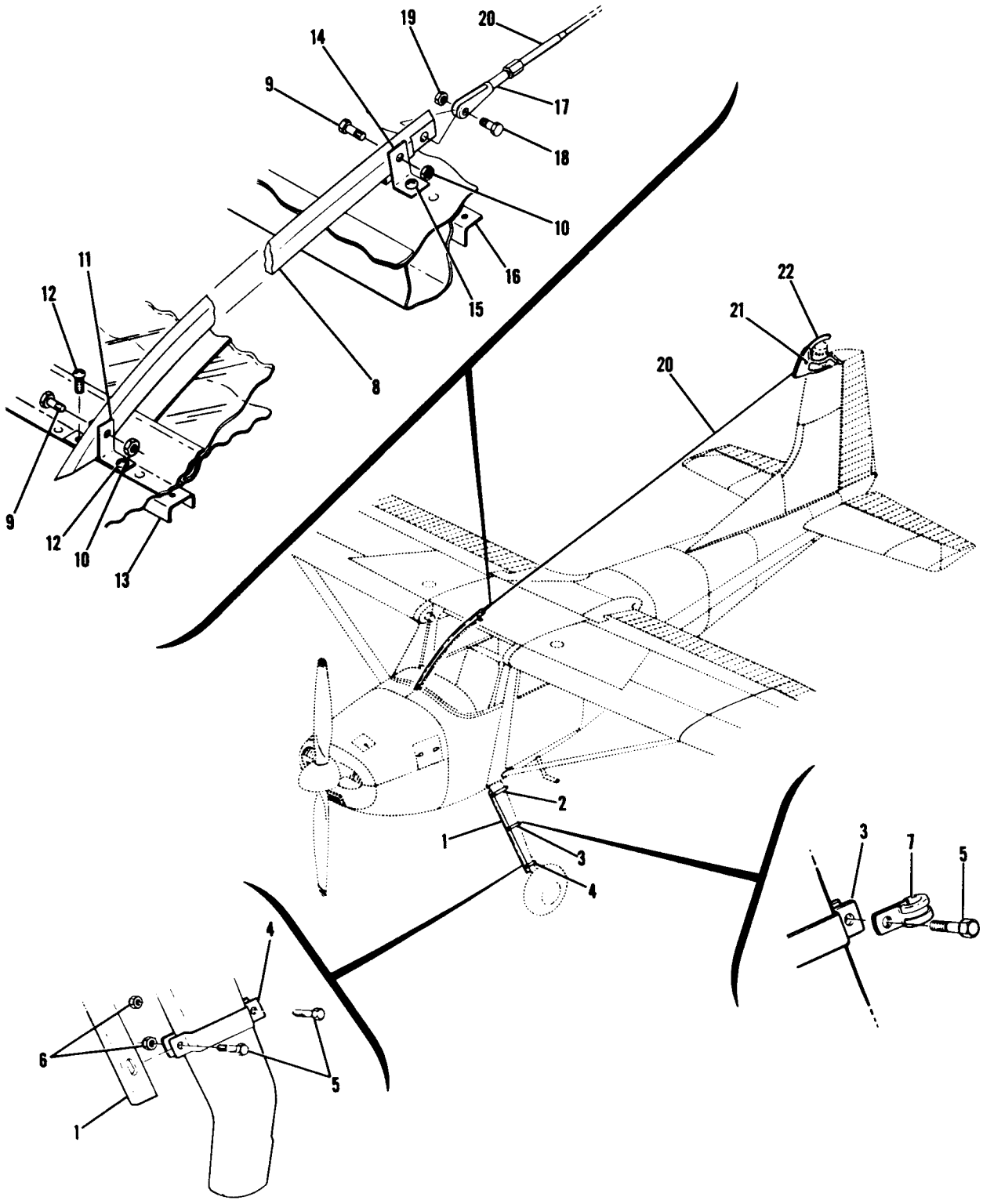

AG CARRYALL
SERIAL 18501935 THRU 18502310

Figure 70A. Wire Cutter & Cable Deflector Installation

FIGURE AND INDEX NO.	PART NUMBER	DESCRIPTION 1 2 3 4 5 6 7	UNITS PER ASSY	USABLE ON CODE
70A-		WIRE CUTTER & CABLE DEFLECTOR INSTALLATION	NP	A
- 1	1600069-2	CUTTER BLADE-MAIN GEAR LH	1	
	1600069-1	CUTTER BLADE-MAIN GEAR RH	1	
- 2	0741061-2	BRACKET-MAIN GEAR UPPER OUTBD LH & INBD RH	2	
	0741061-1	BRACKET-MAIN GEAR UPPER INBD LH & OUTBD RH	2	
- 3	0741061-4	BRACKET-MAIN GEAR CENTER OUTBD LH & INBD RH	2	
	0741061-3	BRACKET-MAIN GEAR CENTER INBD LH & OUTBD RH	2	
- 4	0741061-6	BRACKET-MAIN GEAR LOWER OUTBD LH & INBD RH	2	
	0741061-5	BRACKET-MAIN GEAR LOWER INBD LH & OUTBD RH	2	
		ATTACHING PARTS		
- 5	AN3-6A	BOLT	2	
- 6	MS21044N3	NUT	2	
		---*---		
- 7	MS21919D2	CLAMP-BRAKE LINE	1	
- 8	0713961-1	CUTTER BLADE-WINDSHIELD	1	
		ATTACHING PARTS		
- 9	AN3-10A	BOLT	2	
-10	MS21044N3	NUT	2	
		---*---		
-11	0713962-2	CLIP-BRACE	2	
		ATTACHING PARTS		
-12	NAS220-6	SCREW	1	
	NAS679A08	NUT	1	
		---*---		
-13	0713962-1	CHANNEL SUPPORT	1	
-14	0713962-3	CLIP-BRACE	2	
		ATTACHING PARTS		
-15	NAS220-6	SCREW	1	
	NAS679A08	NUT	1	
		---*---		
-16	0713962-4	ANGLE SUPPORT	1	
-17	AN665-34R	CLEVIS	1	
		ATTACHING PARTS		
-18	AN4-4A	BOLT	1	
-19	NAS679A4	NUT	1	
		---*---		
-20	1660300-40	CABLE ASSEMBLY-DEFLECTOR	1	
		ATTACHING PARTS		
-21	AN3-4A	BOLT	1	
	NAS679A4	NUT	1	
		---*---		
-22	0731608-1	SUPPORT-CABLE DEFLECTOR LH	1	
	0731608-2	SUPPORT-CABLE DEFLECTOR RH	1	
		ATTACHING PARTS		
	S1021Z10-8	SCREW	8	
	A8818-10Z1	NUT	8	
	NAS42DD5-17	SPACER	3	
	NAS42DD5-39	SPACER	2	
		---*---		

A---SERIAL 18501935 THRU 18502310 AG CARRYALL

Fuselage Equipment (Cont)

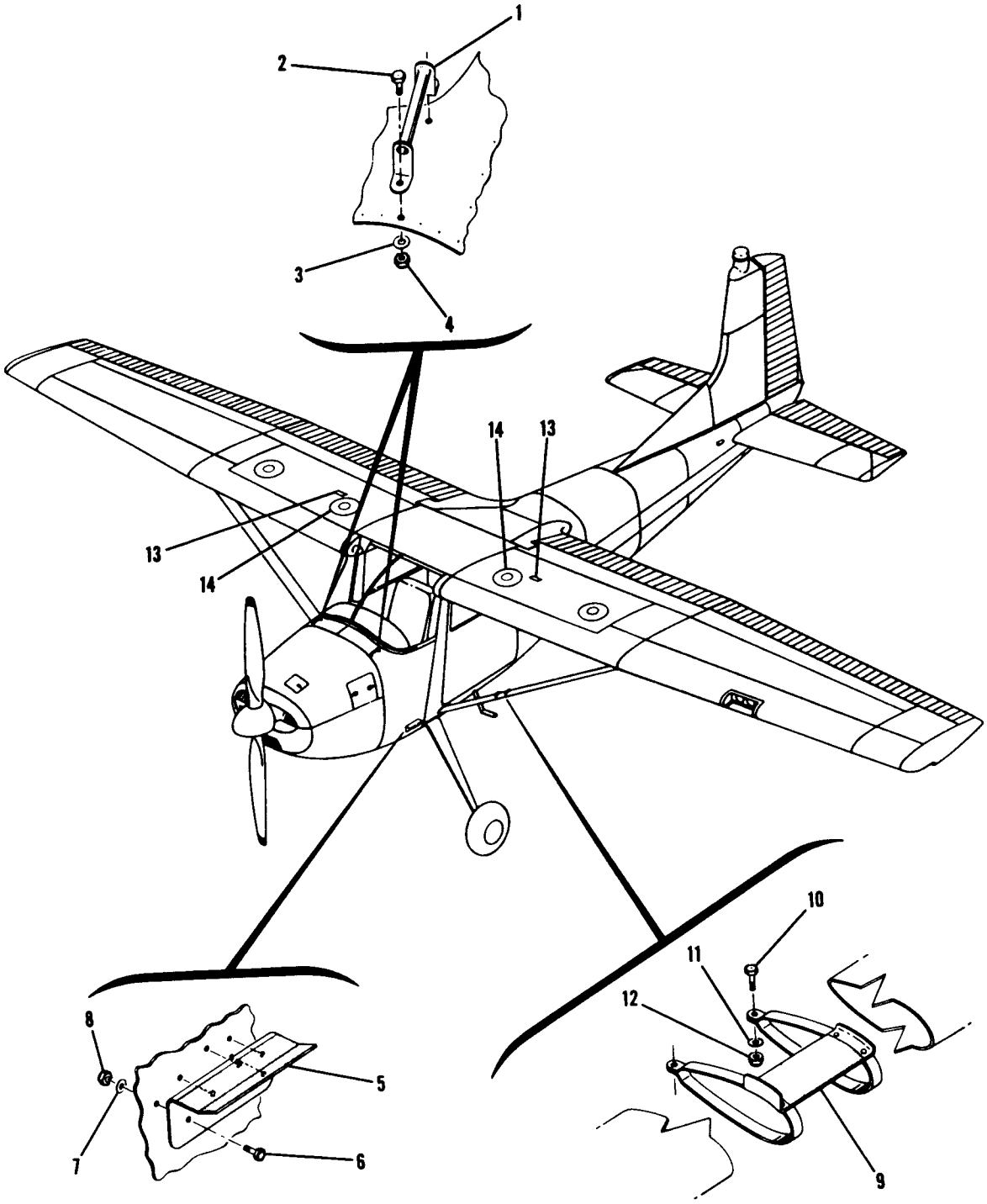

SERIAL 185-0986 THRU 18502310
SERIAL 18051640 THRU 18052384

Figure 70B. Auxiliary Refueling Equipment Installation

FIGURE AND INDEX NO.	PART NUMBER	DESCRIPTION 1 2 3 4 5 6 7	UNITS PER ASSY	USABLE ON CODE
708-		AUXILIARY REFUELING EQUIPMENT INSTALLATION	NP	A
- 1	0713191-1	HANDLE ASSEMBLY	2	
		ATTACHING PARTS		
- 2	AN3-4A	BOLT-FRONT	1	
	AN3-3A	BOLT-REAR	1	
- 3	AN960D10L	WASHER	2	
- 4	MS21044N3	NUT	2	
		---*---		
- 5	0713194-1	STEP-FUSELAGE MOUNTED LH	1	
	0713194-2	STEP-FUSELAGE MOUNTED RH	1	
		ATTACHING PARTS		
- 6	AN3-4A	BOLT	4	D
	AN3-5A	BOLT	3	E
	AN3-6A	BOLT	2	E
- 7	AN960D10L	WASHER	4	D
	AN960D10L	WASHER	5	E
- 8	MS21044N3	NUT	4	D
	MS21044N3	NUT	5	E
		---*---		
- 9	0721203-1	STEP ASSEMBLY-STRUT MOUNTED LH	1	B
	0721207-1	STEP ASSEMBLY-STRUT MOUNTED LH	1	C
	0721203-2	STEP ASSEMBLY-STRUT MOUNTED RH	1	B
	0721207-2	STEP ASSEMBLY-STRUT MOUNTED RH	1	C
		ATTACHING PARTS		
-10	AN3-3A	BOLT	2	
-11	AN960D10L	WASHER	2	
-12	MS21044N3	NUT	2	
		---*---		
-13	0721205-1	PLACARD-WING	2	
-14	SEE FIG 13	CAP & ADAPTOR ASSEMBLY	2	
		A---SERIAL 185-0986 THRU 18502310		
		SERIAL 18051640 THRU 18052384		
		B---SERIAL 185-0986 THRU 18502310		
		C---SERIAL 18051640 THRU 18052384		
		D---SERIAL 185-0968 THRU 18502090		
		SERIAL 18051640 THRU 18052284		
		E---SERIAL 18502091 THRU 18502310		
		SERIAL 18052285 THRU 18052384		

Propeller

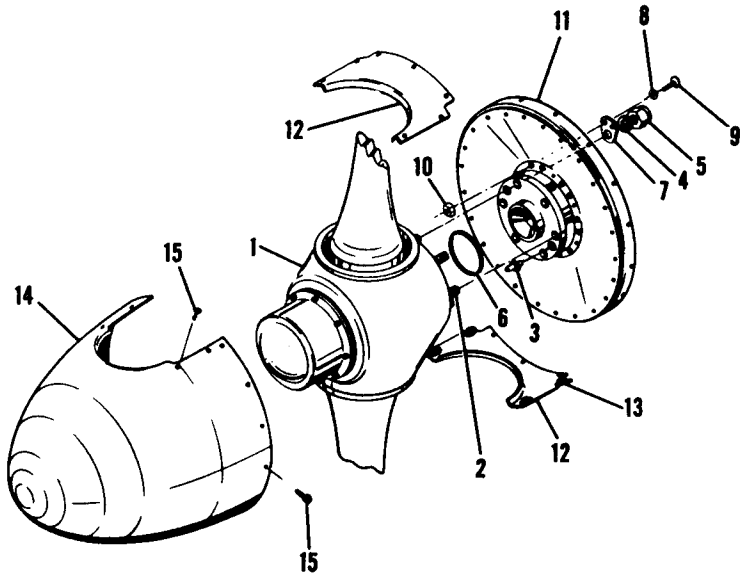

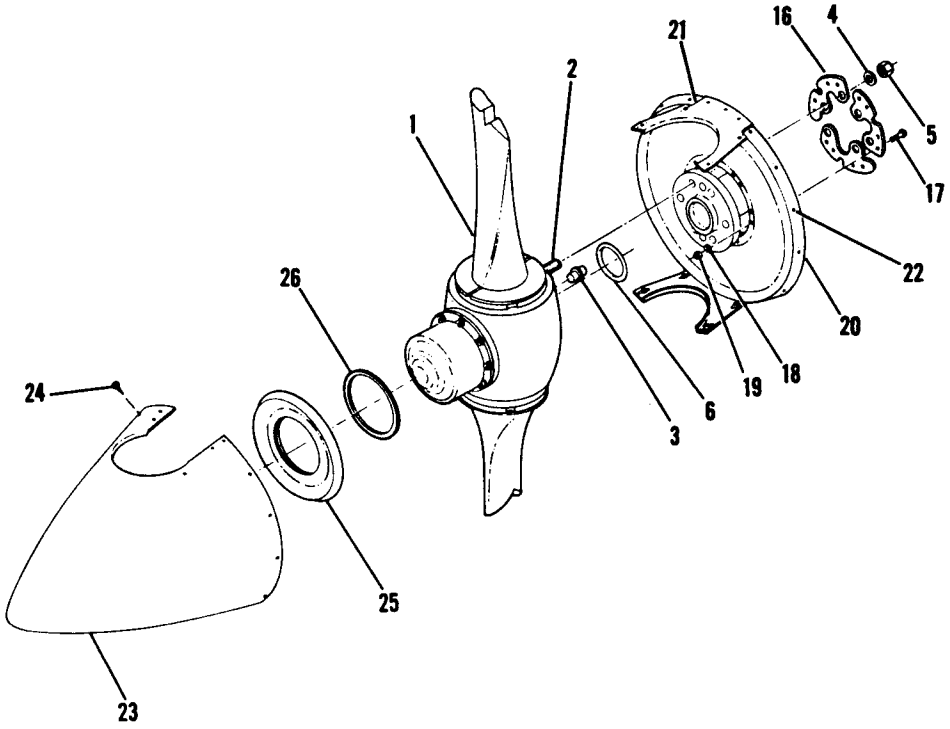

Figure 71. Propeller Installation

FIGURE AND INDEX NO.	PART NUMBER	DESCRIPTION 1 2 3 4 5 6 7	UNITS PER ASSY	USABLE ON CODE
71 -		PROPELLER INSTALLATION	NP	
- 1	0752024-12	PROPELLER ASSEMBLY-MCCAULEY 2A34C50/90A-8	1	A
		SEE FIGURE 72A WHEN EXHAUSTED USE C161002-0202		
	C161002-0202	PROPELLER ASSEMBLY-MCCAULEY 2A34C50/90A-8	1	L
		SEE FIGURE 72A WHEN EXHAUSTED USE C161002-0201		
	C161002-0201	PROPELLER ASSEMBLY-MCCAULEY 2A34C66/90AT-8	1	P
		SEE FIGURE 72A		
	SEE FIG 72C	PROPELLER ASSEMBLY-MCCAULEY	1	T
	0752024-15	PROPELLER ASSEMBLY-MCCAULEY 2A34C50/90A-2	1	C
		SEE FIGURE 72A WHEN EXHAUSTED USE C161002-0203		
	C161002-0203	PROPELLER ASSEMBLY-MCCAULEY 2A34C50/90A-2	1	M
		SEE FIGURE 72A WHEN EXHAUSTED USE C161002-0204		
	C161002-0204	PROPELLER ASSEMBLY-MCCAULEY 2A34C66/90AT-2	1	Q
		SEE FIGURE 72A		
	SEE FIG 72C	PROPELLER ASSEMBLY-MCCAULEY	1	U
	0752024-5	PROPELLER ASSEMBLY-MCCAULEY D2A36C33/90M-2	1	D
		SEE FIGURE 72 WHEN EXHAUSTED USE C161004-0105		
	0752024-11	PROPELLER ASSEMBLY-MCCAULEY D2A34C49/90A-2	1	E
		SEE FIGURE 72A WHEN EXHAUSTED USE C161004-0105		
	C161004-0105	PROPELLER ASSEMBLY-MCCAULEY D2A34C49/90A-2	1	R
		SEE FIGURE 72A		
	C161004-0106	PROPELLER ASSEMBLY-MCCAULEY D2A34C58/90A-8	1	F
		SEE FIGURE 72B		
	C161004-0107	PROPELLER ASSEMBLY-MCCAULEY D2A34C58/90AT-4	1	G
		SEE FIGURE 72B		
		ATTACHING PARTS		
- 2	A1561-2 *	BOLT MCL	6	D
	B3099 *	STUD MCL	6	H
- 3	A3047 *	PIN-DOWEL MCL	2	
- 4	A1638-2	WASHER MCL	6	N
- 5	A1639-2 *	NUT MCL	6	
- 6	A1633-3 *	O RING MCL	1	
		---*---		
		SPINNER INSTALLATION-PROPELLER	1	J
		ATTACHING PARTS		
- 7	0752005-4	LUG	6	
- 8	AN525-10R14	SCREW	12	
- 9	AN960PD10	WASHER	12	
-10	MS21044N3	NUT	12	
		---*---		
-11	0752004-6	BULKHEAD ASSEMBLY-SPINNER	1	N
	0752004-7	BULKHEAD ASSEMBLY-SPINNER	1	B
-12	0752004-1	FILLET ASSEMBLY-SPINNER	2	
-13	NAS680A3	NUTPLATE	4	
-14	0752004-2	DOME-SPINNER	1	
		ATTACHING PARTS		
-15	NAS221-8	SCREW	22	
		---*---		
		SPINNER INSTALLATION-PROPELLER	1	K
		ATTACHING PARTS		
-16	0752043-1	LUG	3	
-17	AN525-10R14	SCREW INSTALL WITH HEAD FWD ON MODEL 180	12	
-18	AN960PD10	WASHER	12	
-19	MS21044N3	NUT	12	
		---*---		
-20	0752041-1	BULKHEAD ASSEMBLY-SPINNER	1	S
	0752041-3	BULKHEAD ASSEMBLY-SPINNER	1	T
-21	0752044-1	FILLET ASSEMBLY	2	S
	0752044-3	FILLET ASSEMBLY	1	T
	NAS697A3	NUTPLATE	4	
-22	NAS680A3	NUTPLATE	14	
-23	0752042-1	SPINNER ASSEMBLY	1	S
	0752042-5	SPINNER ASSEMBLY	1	T

CONTINUED ON NEXT PAGE

FIGURE AND INDEX NO.	PART NUMBER	DESCRIPTION 1 2 3 4 5 6 7	UNITS PER ASSY	USABLE ON CODE
71 -24	NAS221-8	SCREW ----------	1	
-25	1250412-1	SUPPORT ----------	1	
-26	0752620-1	SPACER ----------	AR	
		NOTE. *THESE PARTS ARE PART OF THE PROPELLER ASSEMBLIES SHOWN ON FIG 72, 72A, 72B & 72C.		
		A---SERIAL 18051184 THRU 18051761		
		B---SERIAL 185-0001 THRU 185-1149		
		C---SERIAL 180 AMPHIBIAN & 180 FLOATPLANE 18051184 THRU 18051761		
		D---SERIAL 185-0001 THRU 185-0512		
		E---SERIAL 185-0513 THRU 185-1109 260 HP		
		F---SERIAL 185-0968 THRU 18502310 300 HP		
		G---SERIAL 185 AMPHIBIAN & 185 FLOATPLANE 185-0968 THRU 18502310 300 HP		
		H---SERIAL 185-0513 THRU 18502310		
		J---SERIAL 18051184 THRU 18051774 SERIAL 185-0001 THRU 185-1149		
		K---SERIAL 18051775 THRU 18052384 SERIAL 185-1150 THRU 18502310		
		L---SERIAL 18051762 THRU 18051789		
		M---SERIAL 180 AMPHIBIAN & 180 FLOATPLANE 18051762 THRU 18051789		
		N---SERIAL 18051184 THRU 18051774		
		P---SERIAL 18051790 THRU 18052067		
		Q---SERIAL 180 AMPHIBIAN & 180 FLOATPLANE 18051790 THRU 18052067		
		R---SERIAL 185-1110 THRU 185-1149 260 HP		
		S---SERIAL 18051775 THRU 18052067 SERIAL 185-1150 THRU 18502310		
		T---SERIAL 18052068 THRU 18052384		
		U---SERIAL 180 AMPHIBIAN & 180 FLOATPLANE 18052068 THRU 18052384		

Propeller (Cont)

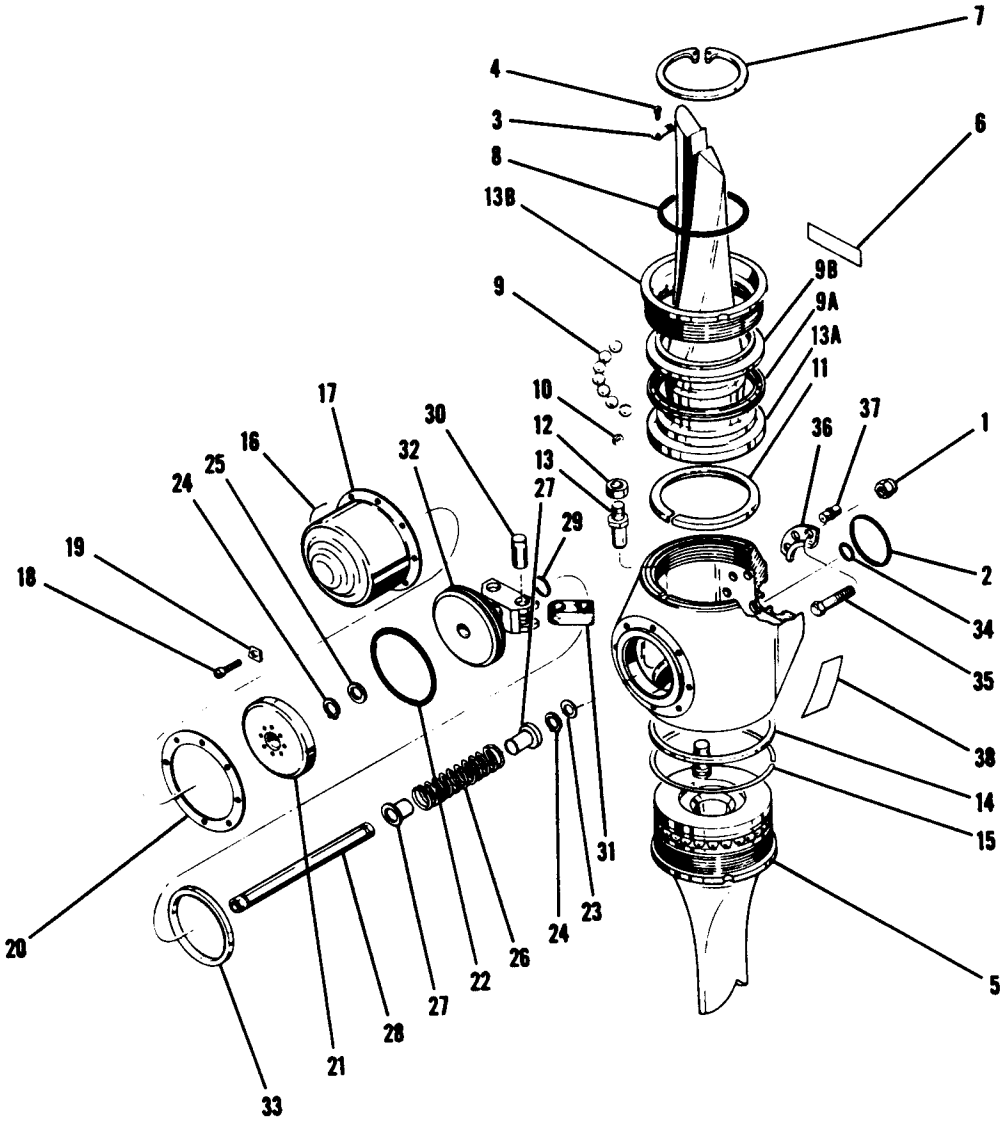

SERIAL 185-0001 THRU 185-0512

Figure 72. McCauley Propeller Assembly

FIGURE AND INDEX NO.	PART NUMBER	DESCRIPTION 1 2 3 4 5 6 7	UNITS PER ASSY	USABLE ON CODE
72 -	0752024-5	PROPELLER ASSEMBLY-MODEL D2A36C33/90M-2 88 IN. DIA. MCL	1	A
		WHEN EXHAUSTED USE C161004-0105 SEE FIGURE 72A		
		ATTACHING PARTS	6	
- 1	A1639-2	NUT MCL	1	
- 2	A1633-3	PACKING-O RING MCL		
		---*---	AR	
- 3	A2104	WEIGHT-BALANCE MCL		
		ATTACHING PARTS		
- 4	A1635-16	SCREW-ATTACH ONE WEIGHT MCL	AR	
	A1635-17	SCREW-ATTACH TWO WEIGHTS MCL	AR	
	A1635-18	SCREW-ATTACH THREE WEIGHTS MCL	AR	
	A1635-19	SCREW-ATTACH FOUR WEIGHTS MCL	AR	
	A1635-21	SCREW-ATTACH FIVE WEIGHTS MCL	AR	
	A1635-22	SCREW-ATTACH SIX WEIGHTS MCL	AR	
		---*---	2	
- 5	D2341/90M2	BLADE ASSEMBLY-88 INCH DIA. MCL	1	
- 6	A1958	DECAL MCL	1	
- 7	A1636-6	RING-EXTERNAL RETAINING MCL	1	
- 8	A1633-13	PACKING-O RING MCL	1	
	C1587	BEARING-BLADE RETENTION MCL	22	
- 9	A1634-4	BALL BEARING MCL	1	
- 9A	C1587-1	RACE-INNER MCL	1	
- 9B	C1587-2	RACE-OUTER MCL	22	
-10	A1742	SEPERATOR-BALL MCL	AR	
-11	B2289-1	SHIM-FERRULE 0.005 IN. MCL	AR	
	B2289-2	SHIM-FERRULE 0.010 IN. MCL	AR	
	B2289-3	SHIM-FERRULE 0.015 IN. MCL	1	
-12	A1883	WASHER-ACTUATING PIN MCL	1	
-13	A1882	PIN-BLADE ACTUATING MCL	1	
-13A	C2464	FERRULE-BLADE RETENTION	1	
-13B	C2463	NUT-BLADE RETENTION	2	
-14	B3216	RING-RETENTION NUT LOCK MCL	2	
-15	A3217	SHIM-BALANCING MCL	1	
-16	A2356	DECAL-SPRING KIT INSTALLATION MCL	1	
-17	C1904	CYLINDER MCL		
		ATTACHING PARTS	8	
-18	A1635-65	SCREW MCL	8	
-19	A1638-9	WASHER MCL	1	
-20	A1938	GASKET-CYLINDER MCL		
		---*---	1	
-21	B1965	SUPPORT-SPACER MCL	1	
-22	A1633-12	PACKING- O RING MCL	1	
-23	A2351	WASHER-FIBER MCL	2	
-24	A1636-7	RING-EXTERNAL RETAINING MCL	AR	
-25	A2108 *	SPACER STOCK-LOW PITCH PROP STOP MCL	1	
-26	A3125	SPRING-LOW PITCH RETURN BOOST MCL	2	
-27	A3124	GUIDE-SPRING MCL	1	
-28	B2345	TUBE-PISTON ROD MCL	1	
-29	A1633-9	PACKING-O RING MCL	1	
	A1934	PISTON ASSEMBLY MCL	2	
-30	A1936	PIN-PISTON MCL	2	
-31	A1935	LINK-BLADE ACTUATING MCL	1	
-32	C1939	PISTON-BLADE ACTUATING MCL	AR	
-33	A1937 *	SPACER STOCK-HIGH PITCH STOP MCL	1	
-34	A1633-9	PACKING-O RING MCL	1	
	C2715	HUB ASSEMBLY MCL	4	
-35	A1561-2	BOLT-HUB MOUNTING MCL	AR	
	A1561-4	BOLT-HUB MOUNTING 0.002 IN. OVERSIZE MCL	AR	
	A1561-6	BOLT-HUB MOUNTING 0.004 IN. OVERSIZE MCL	2	
	A2713-2	BOLT-HUB MOUNTING MCL	AR	
	A2713-4	BOLT-HUB MOUNTING 0.002 IN. OVERSIZE MCL	AR	
	A2713-6	BOLT-HUB MOUNTING 0.004 IN. OVERSIZE MCL	3	
-36	A2714	WASHER-FLANGE MCL	2	
-37	A3047	DOWEL-HUB ALIGNMENT MCL	AR	
	A3047-30	DOWEL-HUB ALIGNMENT 0.0015 IN. OVERSIZE MCL	AR	
	A3047-45	DOWEL-HUB ALIGNMENT 0.0030 IN. OVERSIZE MCL	1	
-38	A2230	DECAL-PROP INSTALLATION INSTRUCTIONS MCL	1	
	S1433-2	DECAL-CESSNA		
		NOTE. *FURNISHED IN 3-1/2 IN. STOCK LENGTHS. PROPER THICKNESS TO BE DETERMINED & CUT AT RE-ASSEMBLY.		
		A---SERIAL 185-0001 THRU 185-0512		

Propeller (Cont)

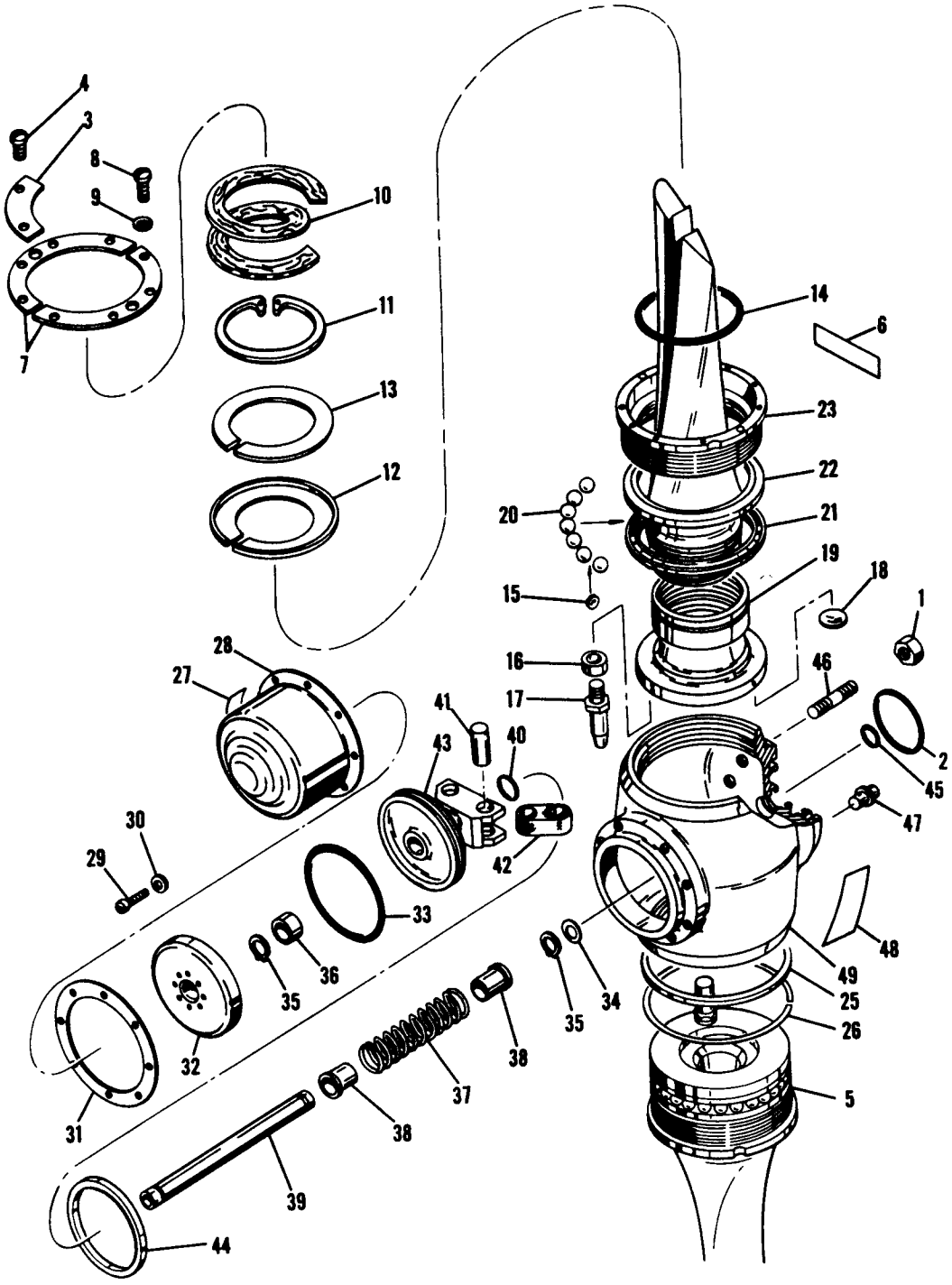

SERIAL 18051184 THRU 18052067
SERIAL 185-0513 THRU 185-1149 (260 HP)

Figure 72A. McCauley Propeller Assembly

FIGURE AND INDEX NO.	PART NUMBER	DESCRIPTION 1 2 3 4 5 6 7	UNITS PER ASSY	USABLE ON CODE
72A-	0752024-12	PROPELLER ASSEMBLY-MCCAULEY 2A34C50/90A8 82 IN DIA --------	1	A
		WHEN EXHAUSTED USE C161002-0202		
	C161002-0202	PROPELLER ASSEMBLY-MCCAULEY 2A34C50/90A8 82 IN DIA --------	1	D
		WHEN EXHAUSTED USE C161002-0201		
	C161002-0201	PROPELLER ASSEMBLY-MCCAULEY 2A34C66/90AT8 82 IN DIA --------	1	J
	0752024-15	PROPELLER ASSEMBLY-MCCAULEY 2A34C50/90A2 88 IN DIA --------	1	C
		WHEN EXHAUSTED USE C161002-0203		
	C161002-0203	PROPELLER ASSEMBLY-MCCAULEY 2A34C50/90A2 88 IN DIA --------	1	F
		WHEN EXHAUSTED USE C161002-0204		
	C161002-0204	PROPELLER ASSEMBLY-MCCAULEY 2A34C66/90AT2 88 IN DIA --------	1	K
	0752024-11	PROPELLER ASSEMBLY-MCCAULEY D2A34C49/90A2 88 IN DIA --------	1	B
		WHEN EXHAUSTED USE C161004-0105		
	C161004-0105	PROPELLER ASSEMBLY-MCCAULEY D2A34C49/90A2 88 IN DIA --------	1	E
		ATTACHING PARTS	6	
- 1	A1639-2	NUT MCL	1	
- 2	A1633-3	PACKING-O RING MCL		
		---*---	AR	
- 3	A2423	WEIGHT-BALANCE MCL		
		ATTACHING PARTS		
- 4	A1635-16	SCREW-ATTACH ONE WEIGHT MCL	2	
	A1635-17	SCREW-ATTACH TWO WEIGHTS MCL	2	
	A1635-18	SCREW-ATTACH THREE WEIGHTS MCL	2	
	A1635-19	SCREW-ATTACH FOUR WEIGHTS MCL	2	
	A1635-21	SCREW-ATTACH FIVE WEIGHTS MCL	2	
	A1635-22	SCREW-ATTACH SIX WEIGHTS MCL	2	
		---*---		
- 5	D3108/90A8	BLADE ASSEMBLY MCL	1	G
	D3223/90AT8	BLADE ASSEMBLY MCL	1	J
	D3108/90A2	BLADE ASSEMBLY MCL	1	H
	D3223/90AT2	BLADE ASSEMBLY MCL	1	K
- 6	A1958	DECAL MCL	1	
- 7	B2417	PLATE-SPLIT COVER MCL	1	
		ATTACHING PARTS		
- 8	A1635-27	SCREW MCL	AR	
- 9	A1638-5	WASHER-FIBER MCL	AR	
		---*---		
-10	B2422-1	PACKING-FELT MCL	1	
-11	A1636-6	RING-EXTERNAL RETAINING MCL	1	
-12	B2420-4	SHIM-0.004 IN. MCL	AR	
	B2420-6	SHIM-0.006 IN. MCL	AR	
-13	B2421-8	SHIM-0.008 IN. MCL	AR	
	B2421-10	SHIM-0.010 IN. MCL	AR	
	B2421-12	SHIM-0.012 IN. MCL	AR	
	B2421-14	SHIM-0.014 IN. MCL	AR	
	B2421-16	SHIM-0.016 IN. MCL	AR	
	B2421-18	SHIM-0.018 IN. MCL	AR	
	B2421-20	SHIM-0.020 IN. MCL	AR	
-14	A1633-13	PACKING- O RING MCL	1	
-15	A3110	SEPARATOR-BALL MCL	30	
-16	A3100	WASHER-ACTUATING PIN MCL	1	
-17	A3149	PIN-BLADE ACTUATING MCL	1	
-18	A1580	PLUG-FERRULE STAKING MCL	1	
-19	C3054	FERRULE-BLADE RETENTION MCL	1	
	C2987	BEARING-BLADE RETENTION MCL	1	
-20	A1634-5	BALL BEARING MCL	30	
-21	C2987-1	RACE-INNER MCL	1	
-22	C2987-2	RACE-OUTER MCL	1	
-23	C3092	NUT-BLADE RETENTION MCL	1	
-24		DELETED, NOT PROCURABLE		
-25	B3216	RING-RETENTION NUT LOCK MCL	2	
-26	A3217	SHIM-BALANCING MCL	2	
-27	A2356	DECAL MCL	1	
-28	C1904	CYLINDER MCL	1	
		ATTACHING PARTS		
-29	A1635-65	SCREW MCL	8	
-30	A1638-9	WASHER-BRASS MCL	8	
-31	A1938	GASKET-CYLINDER MCL	1	
		---*---		
-32	B1965	SUPPORT-SPACER MCL	1	
-33	A1633-12	PACKING-O RING MCL	1	
-34	A2351	WASHER-FIBER MCL	1	
-35	A1636-7	RING-EXTERNAL RETAINING MCL	2	
-36	A2108 *	SPACER STOCK-LOW PITCH STOP MCL	AR	

CONTINUED ON NEXT PAGE

FIGURE AND INDEX NO.	PART NUMBER	DESCRIPTION 1 2 3 4 5 6 7	UNITS PER ASSY	USABLE ON CODE
72A-37	A3125	SPRING-LOW PITCH RETURN BOOST MCL	1	
-38	A3124	GUIDE-SPRING MCL	2	
-39	B2345	TUBE-PISTON ROD MCL	1	
-40	A1633-9	PACKING- O RING MCL	1	
	A1934	PISTON ASSEMBLY MCL	1	
-41	A1936	PIN-PISTON MCL	2	
-42	A1935	LINK-BLADE ACTUATING MCL	2	
-43	C1939	PISTON-BLADE ACTUATING MCL	1	
-44	A1937 *	SPACER STOCK-HIGH PITCH STOP MCL	AR	
-45	A1633-9	PACKING- O RING MCL	1	
	C3105	HUB ASSEMBLY MCL	1	M
	C3103	HUB ASSEMBLY MCL	1	L
-46	B3099	STUD-HUB MOUNTING MCL	6	
-47	A3047	DOWEL-HUB ALIGNMENT MCL	2	
	A3047-30	DOWEL-HUB ALIGNMENT 0.0015 IN. OVERSIZE MCL	AR	
	A3047-45	DOWEL-HUB ALIGNMENT 0.0030 IN. OVERSIZE MCL	AR	
-48	A2230	DECAL-PROP INSTALLATION INSTRUCTIONS MCL	1	
-49	D3102	HUB-PROPELLER MCL	1	M
	D3098	HUB-PROPELLER MCL	1	L

NOTE. *FURNISHED IN 3-1/2 IN. STOCK LENGTHS. PROPER THICKNESS TO BE DETERMINED AND CUT AT RE-ASSEMBLY.

A---SERIAL 18051184 THRU 18051761
B---SERIAL 185-0513 THRU 185-1109 260 HP
C---SERIAL 180 FLOATPLANE & AMPHIBIAN 18051184 THRU 18051761
D---SERIAL 18051762 THRU 18051789
E---SERIAL 185-1109 THRU 185-1149 260 HP
F---SERIAL 180 FLOATPLANE & AMPHIBIAN 18051762 THRU 18051789
G---SERIAL 18051184 THRU 18051789
H---SERIAL 185-0513 THRU 185-1149 260 HP
SERIAL 180 FLOATPLANE & AMPHIBIAN 18051184 THRU 18051789
J---SERIAL 18051790 THRU 18052067
K---SERIAL 180 FLOATPLANE & AMPHIBIAN 18051790 THRU 18052067
L---SERIAL 185-0513 THRU 185-1149 260 HP
M---SERIAL 18051184 THRU 18052067
SERIAL 180 FLOATPLANE & AMPHIBIAN 18051184 THRU 18052067

FIGURE AND INDEX NO.	PART NUMBER	DESCRIPTION 1 2 3 4 5 6 7	UNITS PER ASSY	USABLE ON CODE
728-	C161004-0106	PROPELLER ASSEMBLY-MCCAULEY D2A34C58/90AT-8 82 IN DIA -	1	A
	C161004-0107	PROPELLER ASSEMBLY-MCCAULEY D2A34C58/90AT-4 86 IN DIA -	1	B
		ATTACHING PARTS		
- 1	A1639-2	NUT MCL	6	
- 2	A1633-3	PACKING-O RING MCL	1	
		---*---		
- 3	A2423	WEIGHT-BALANCE MCL	AR	
		ATTACHING PARTS		
- 4	A1635-16	SCREW-ATTACH ONE WEIGHT MCL	2	
	A1635-17	SCREW-ATTACH TWO WEIGHT MCL	2	
	A1635-18	SCREW-ATTACH THREE WEIGHTS MCL	2	
	A1635-19	SCREW-ATTACH FOUR WEIGHTS MCL	2	
	A1635-21	SCREW-ATTACH FIVE WEIGHTS MCL	2	
	A1635-22	SCREW-ATTACH SIX WEIGHTS MCL	2	
		---*---		

CONTINUED ON NEXT PAGE

Propeller (Cont)

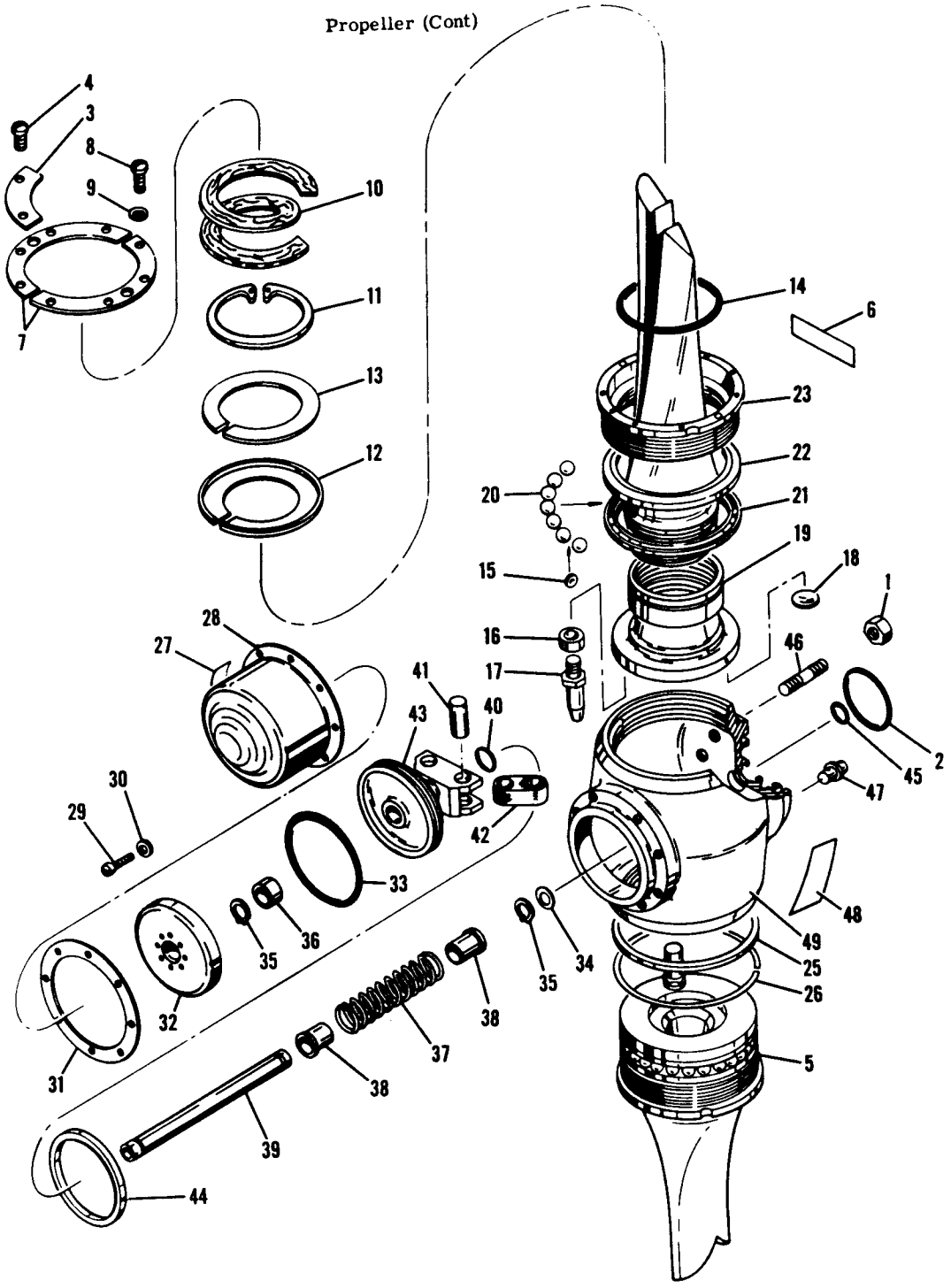

SERIAL 185-0968 THRU 18502310 (300 HP)

Figure 72B. McCauley Propeller Assembly

FIGURE AND INDEX NO.	PART NUMBER	DESCRIPTION 1 2 3 4 5 6 7	UNITS PER ASSY	USABLE ON CODE
728- 5	D3223/90AT8	BLADE ASSEMBLY MCL	2	A
	D3223/90AT4	BLADE ASSEMBLY MCL	2	B
- 6	A1958	DECAL MCL	1	
- 7	B2417	PLATE-SPLIT COVER MCL	1	
		ATTACHING PARTS		
- 8	A1635-27	SCREW MCL	AR	
- 9	A1638-5	WASHER-FIBER MCL	AR	
		---*---		
-10	B2422-1	PACKING-FELT MCL	1	
-11	A1636-6	RING-EXTERNAL RETAINING MCL	1	
-12	B2420-4	SHIM-0.004 IN MCL	AR	
	B2420-6	SHIM-0.006 IN MCL	AR	
-13	B2421-8	SHIM-0.008 IN MCL	AR	
	B2421-10	SHIM-0.010 IN MCL	AR	
	B2421-12	SHIM-0.012 IN MCL	AR	
	B2421-14	SHIM-0.014 IN MCL	AR	
	B2421-16	SHIM-0.016 IN MCL	AR	
	B2421-18	SHIM-0.018 IN MCL	AR	
	B2421-20	SHIM-0.020 IN MCL	AR	
-14	A1633-13	PACKING-O RING MCL	1	
-15	A3110	SEPARATOR-BALL MCL	30	
-16	A3100	WASHER-ACTUATING PIN MCL	1	
-17	A3149	PIN-BLADE ACTUATING MCL	1	
-18	A1580	PLUG-FERRULE STAKING MCL	1	
-19	C3054	FERRULE-BLADE RETENTION MCL	1	
	C2987	BEARING-BLADE RETENTION MCL	1	
-20	A1634-5	BALL BEARING MCL	30	
-21	C2987-1	RACE-INNER MCL	1	
-22	C2987-2	RACE-OUTER MCL	1	
-23	C3092	NUT-BLADE RETENTION MCL	1	
-24		DELETED-NOT PROCURABLE		
-25	B3216	RING-RETENTION NUT LOCK MCL	2	
-26	A3217	SHIM-BALANCING MCL	2	
-27	A2356	DECAL MCL	1	
-28	C1904	CYLINDER MCL	1	
		ATTACHING PARTS		
-29	A1635-65	SCREW MCL	8	
-30	A1638-9	WASHER-BRASS MCL	8	
-31	A1938	GASKET-CYLINDER MCL	1	
		---*---		
-32	B1965	SUPPORT-SPACER MCL	1	
-33	A1633-12	PACKING-O RING MCL	1	
-34	A2351	WASHER-FIBER MCL	1	
-35	A1636-7	RING-EXTERNAL RETAINING MCL	2	
-36	A2108 *	SPACER STOCK-LOW PITCH STOP MCL	AR	
-37	A3125	SPRING-LOW PITCH RETURN BOOST MCL	1	
-38	A3124	GUIDE-SPRING MCL	2	
-39	B2345	TUBE-PISTON ROD MCL	1	
-40	A1633-9	PACKING-O RING MCL	1	
	A1934	PISTON ASSEMBLY MCL	1	
-41	A1936	PIN-PISTON MCL	2	
-42	A1935	LINK-BLADE ACTUATING MCL	2	
-43	C1939	PISTON-BLADE ACTUATING MCL	1	
-44	A1937 *	SPACER STOCK-HIGH PITCH STOP MCL	AR	
-45	A1633-9	PACKING-O RING MCL	1	
	C3103	HUB ASSEMBLY MCL	1	
-46	B3099	STUD-HUB MOUNTING MCL	6	
-47	A3047	DOWEL-HUB ALIGNMENT MCL	2	
	A3047-30	DOWEL-HUB ALIGNMENT 0.0015 IN OVERSIZE MCL	AR	
	A3047-45	DOWEL-HUB ALIGNMENT 0.0030 IN OVERSIZE MCL	AR	
-48	A2230	DECAL-PROP INSTALLATION INSTRUCTIONS MCL	1	
-49	D3098	HUB-PROPELLER MCL	1	

NOTE. *FURNISHED IN 3-1/2 IN STOCK LENGTHS. PROPER THICKNESS TO BE DETERMINED AND CUT AT REASSEMBLY.

A---SERIAL 185-0968 THRU 18502310 300 HP
B---SERIAL 185 FLOATPLANE & AMPHIBIAN 185-0968 THRU 18502310 300 HP

Propeller (Cont)

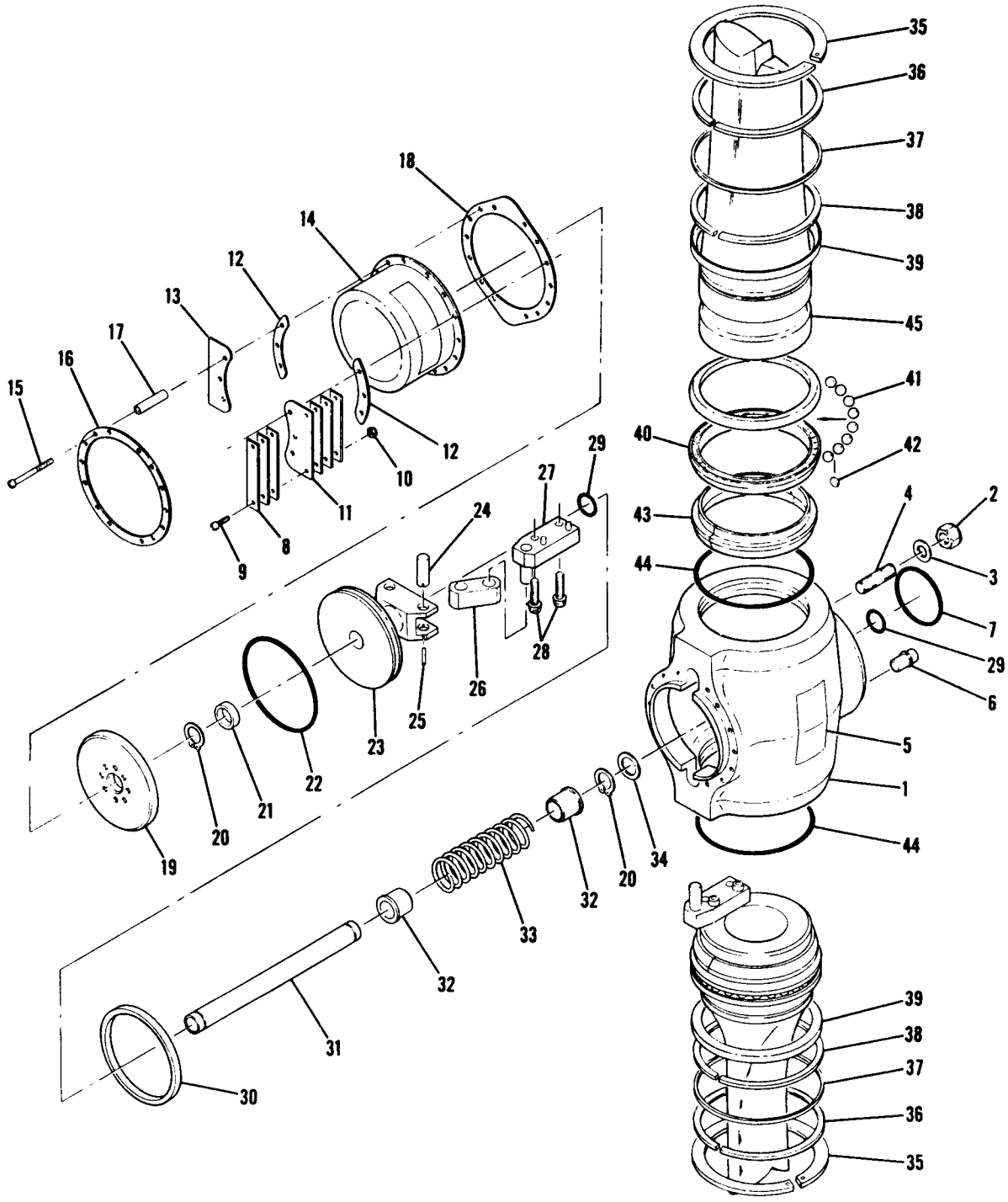

SERIAL 18052068 THRU 18052384

Figure 72C. Propeller Assembly

FIGURE AND INDEX NO.	PART NUMBER	DESCRIPTION 1 2 3 4 5 6 7	UNITS PER ASSY	USABLE ON CODE
72C-	C161009-0101	PROPELLER ASSEMBLY MCCAULEY 2A34C201/90DA-8 82 IN DIA -	1	A
		WEU C161009-0104		
	C161009-0104 *	PROPELLER ASSEMBLY MCCUALEY 2A34C203/90DCA-8 82 IN DIA-	1	A
	C161009-0102	PROPELLER ASSEMBLY MCCUALEY 2A34C201/90DA-2 88 IN DIA -	1	B
		WEU C161009-0105		
	C161009-0105 *	PROPELLER ASSEMBLY MCCUALEY 2A34C203/90DCA-2 88 IN DIA-	1	B
- 1	C3910/C201	HUB ASSEMBLY MCL	NP	
		ATTACHING PARTS		
- 2	A1639-2	NUT-HUB MOUNTING MCL	6	
- 3	A1638-2	WASHER MCL	6	
		---*---		
- 4	B3920	STUD MCL	6	
- 5	A2230	PLACARD MCL	1	
- 6	A4001	DOWL-HUB ALIGNMENT MCL	2	
- 7	A1633-3	O-RING MCL	1	
- 8	A3906	WEIGHT-BALANCE MCL	AR	
- 9	A1635-36	SCREW ATTACH ONE WEIGHT MCL	2	
	A1635-37	SCREW ATTACH TWO WEIGHTS MCL	2	
	A1635-40	SCREW ATTACH THREE WEIGHTS MCL	2	
	A1635-67	SCREW ATTACH FOUR WEIGHTS MCL	2	
	A1635-56	SCREW ATTACH FIVE WEIGHTS MCL	2	
	A1635-68	SCREW ATTACH SIX WEIGHTS MCL	2	
-10	A1639-23	NUT MCL	2	
-11	B3908	BRACKET-BALANCE WEIGHT MCL	AR	
-12	B4016	GASKET-BRACKET MCL	AR	
-13	B4026	WEIGHT-BALANCE 2 MAX MCL	AR	
-14	C4129	CYLINDER MCL	1	
		ATTACHING PARTS		
-15	A1635-70	SCREW MCL	14	
-16	B4342	RING-CYLINDER MCL	1	
-17	B4354-2	TUBE-CYLINDER MOUNT LONG MCL	AR	
	B4354-3	TUBE-CYLINDER MOUNT SHORT MCL	AR	
-18	B4138	GASKET-CYLINDER MCL	1	
		---*---		
-19	B3526	SUPPORT SPACER MCL	1	
-20	A1636-7	RING-RETAINING MCL	2	
-21	A2108	SPACER-LOW PITCH STOP MCL	1	
-22	A1633-12	O-RING MCL	1	
-23	C3418	PISTON-BLADE ACTUATING MCL	1	
-24	B3414	ROLL PIN MCL	2	
-25	A3150-5	ROLL PIN MCL	2	
-26	A3902	LINK-BLADE ACTUATOR MCL	2	
-27	B3905	ACTUATING PIN & BASE ASSEBLY MCL	2	
		ATTACHING PARTS		
-28	A1635-66	CAP SCREW MCL	2	
		---*---		
-29	A1633-9	O-RING MCL	2	
-30	A1937	SPACER-HIGH PITCH STOP MCL	1	
-31	B2345	TUBE-PISTON ROD MCL	1	
-32	A3124	GUIDE-SPRING MCL	2	
-33	A3125	SPRING-PITCH RETURN MCL	1	
-34	A2351	WASHER-FIBER MCL	1	
-35	B4426	RING-RETAINING MCL	2	
-36	A4427	RING-WIRE MCL	2	
-37	B4407	SHIM-.032 MCL	AR	
	B4407-1	SHIM-.065 MCL	AR	
	B4407-2	SHIM-.051 MCL	AR	
-38	B4277-3	SHIM-ANTI BLADE SHAKE .003 IN. MCL	AR	
	B4277-4	SHIM-ANTI BLADE SHAKE .004 IN. MCL	AR	
	B4277-5	SHIM-ANTI BLADE SHAKE .005 IN. MCL	AR	
	B4277-6	SHIM-ANTI BLADE SHAKE .006 IN. MCL	AR	
	B4277-7	SHIM-ANTI BLADE SHAKE .007 IN. MCL	AR	
	B4277-8	SHIM-ANTI BLADE SHAKE .008 IN. MCL	AR	
	B4277-10	SHIM-ANTI BLADE SHAKE .010 IN. MCL	AR	
	B4277-12	SHIM-ANTI BLADE SHAKE .012 IN. MCL	AR	
	B4277-14	SHIM-ANTI BLADE SHAKE .014 IN. MCL	AR	
	B4277-16	SHIM-ANTI BLADE SHAKE .016 IN. MCL	AR	
	B4277-18	SHIM-ANTI BLADE SHAKE .018 IN. MCL	AR	
	B4277-20	SHIM-ANTI BLADE SHAKE .020 IN. MCL	AR	

CONTINUED ON NEXT PAGE

FIGURE AND INDEX NO.	PART NUMBER	DESCRIPTION 1 2 3 4 5 6 7	UNITS PER ASSY	USABLE ON CODE
72C-39	B4408	CARRIER-SHIM MCL	2	
-40	C3411	BEARING RACE MATCHED SET MCL	2	
-41	A1634-6	BALL BEARING MCL	80	
-42	B4014	BALL SEPERATOR MCL	80	
-43	C3903	RETAINER-SPLIT MATCHED SET MCL	1	
-44	A1633-37	O-RING MCL	2	
-45	90DA-8	BLADE MCL	2	A
	90DA-2	BLADE MCL	2	B

NOTE. *PARTS BREAKDOWN SHOWN ON THIS FIGURE IS NOT APPLICABLE TO C161009-0104 & C161009-0105. SEE APPLICABLE MCCAULEY MANUAL FOR PARTS BREAKDOWN OF THESE ASSEMBLIES.

A---SERIAL 18052068 THRU 18052384
B---SERIAL 18052068 THRU 18052384 FLOATPLANE

FIGURE AND INDEX NO.	PART NUMBER	DESCRIPTION 1 2 3 4 5 6 7	UNITS PER ASSY	USABLE ON CODE
73 -		COWL INSTALLATION-ENGINE	NP	AS
- 1	0752031-201	COWL ASSEMBLY-UPPER	1	L
	0752031-205	COWL ASSEMBLY-UPPER	1	AA
	0752031-208	COWL ASSEMBLY-UPPER	1	AB
- 2	0752031-19	STRIP-PARTING LH	1	
	0752031-20	STRIP-PARTING RH	1	
- 3	4002-244-16	RECEPTACLE CLC	9	
	0752031-24	SKIN ASSEMBLY-UPPER	1	M
	0752031-50	SKIN ASSEMBLY-UPPER	1	N
- 4	0752031-26	ANGLE-UPPER COWL	2	
- 5	0752000-64	SPACER-LATCH	3	M
- 6	0752031-22	STRIP-SPLICE	1	
- 7	CM2791	SNAP RING CLC	10	
	4002H	GROMMET CLC	10	
	4002-4	STUD-SLOTTED HEAD CLC	10	
	40S5-4	STUD-PHILLIPS HEAD CLC	10	
- 8	0752000-56	DOOR ASSEMBLY-OIL	1	M
	0752626-1	DOOR ASSEMBLY-OIL	1	N
- 9	S1188-1	LATCH-DOOR	1	M
	KM610-64	LATCH-DOOR	1	N
-10	MS24665-134	PIN-COTTER	1	N
-11	0752000-117	HINGE-DOOR	1	
-11A	0752627-1	SPRING-OIL FILLER DOOR ASSIST	1	N
	0752031-51	LATCH PLATE-OIL FILLER DOOR	1	N
-12	0752031-29	NOSE CAP ASSEMBLY-UPPER COWL WHEN EXHAUSTED USE 0752031-200	1	C
	0752031-200	NOSE CAP ASSEMBLY-UPPER COWL	1	D
	0752031-206	NOSE CAP ASSEMBLY-UPPER COWL	1	AB
-13	0752030-9	DOUBLER-CAP SPLICE LH	1	
	0752030-8	DOUBLER-CAP SPLICE RH	1	
-14	0752019-10	STRAP-REINFORCING	1	
	0752019-11	STRAP-REINFORCING	1	
-15	0752032-1	RECEPTACLE	2	AF
	0752032-1	RECEPTACLE LH SIDE ONLY	1	AB
	S5A200	SPRING DZ RH SIDE ONLY	1	AB
-16	0752031-37	COWL ASSEMBLY-LOWER LESS FLAPS & DOORS WHEN EXHAUSTED USE 0752031-204	1	C
	0752031-204	COWL ASSEMBLY-LOWER LESS FLAPS & DOORS	1	E
	0752031-210	COWL ASSEMBLY-LOWER LESS FLAPS & DOORS	1	AC
	0752031-211	COWL ASSEMBLY-LOWER LESS FLAPS & DOORS	1	V
	0752031-212	COWL ASSEMBLY-LOWER LESS FLAPS & DOORS	1	AL
	0752031-203	COWL ASSEMBLY-LOWER LESS FLAPS & DOORS	1	AD
	0752031-209	COWL ASSEMBLY-LOWER LESS FLAPS & DOORS	1	AE
-17	0752015-10	DOUBLER-LOWER NOSE CAP	1	
-18	0752015-31	DOUBLER-COWL SPLICE LOWER LH	2	
-19	0752015-19	BRACKET-HINGE LH	1	
-20	0752015-39	BRACKET-HINGE RH	1	
-21	0752015-21	BRACKET-HINGE LH	1	
-22	0752015-22	BRACKET-HINGE RH	1	
-23	0752022-1	STIFFENER	1	
-24	0752031-7	SKIN ASSEMBLY-LOWER COWL SIDE LH	1	
-25	0752031-8	SKIN ASSEMBLY-LOWER COWL SIDE RH	1	
-26	0752031-16	DOUBLER-AFT RH	1	
	0752031-15	DOUBLER-AFT LH WHEN EXHAUSTED USE 0752031-56	1	S
	0752031-56	DOUBLER-AFT LH	1	T
-27	0752031-18	DOUBLER-LOWER PARTING RH	1	
	0752031-17	DOUBLER-LOWER PARTING LH	1	
-28	0752031-9	SKIN ASSEMBLY-LOWER COWL CENTER	1	F
	0752031-36	SKIN ASSEMBLY-LOWER COWL CENTER	1	G
-29	0752015-23	DOUBLER-STRUT OPENING	1	
-30	CM2791	SNAP RING LOWER REAR SIDE	8	
	4002H	GROMMET CLC LOWER REAR SIDE	8	
	4002-4	STUD-SLOTTED HEAD CLC LOWER REAR SIDE	8	
	40S5-4	STUD-PHILLIPS HEAD CLC LOWER REAR SIDE	8	
-31	CM2791	SNAP RING BOTTOM	2	
	4002G	GROMMET CLC BOTTOM	2	
	4002-3	STUD-SLOTTED HEAD CLC BOTTOM	2	
	40S5-3	STUD-PHILLIPS HEAD CLC BOTTOM	2	
-32	CM2791	SNAP RING LOWER PARTING	9	
	4002H	GROMMET CLC LOWER PARTING	9	
	4002-4	STUD-SLOTTED HEAD CLC LOWER PARTING	9	
	40S5-4	STUD-PHILLIPS HEAD CLC LOWER PARTING	9	

CONTINUED ON NEXT PAGE

Cowling

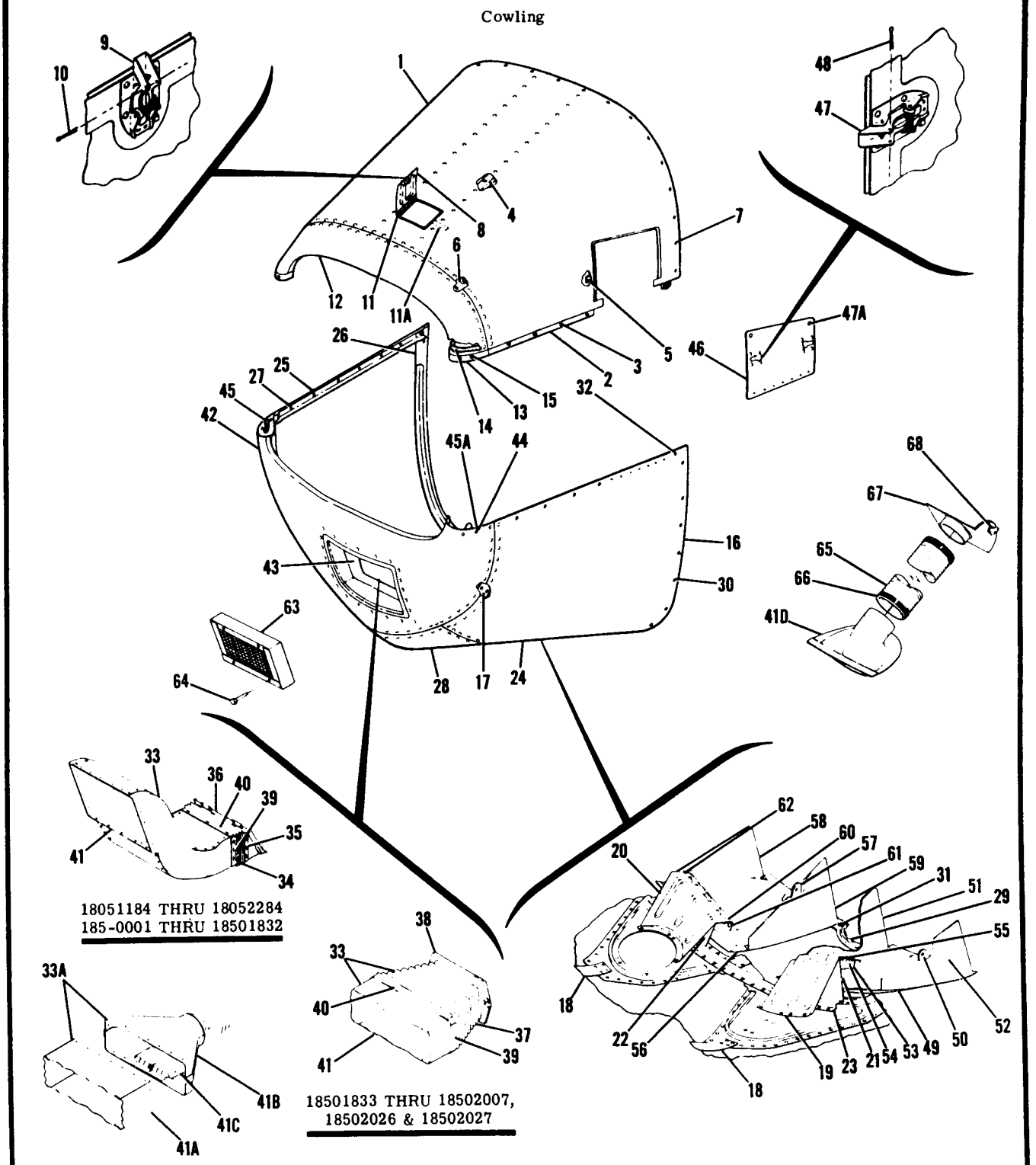

SERIAL 185-0001 THRU 18502090
SERIAL 18051184 THRU 18052284

Figure 73. Engine Cowl Installation

FIGURE AND INDEX NO.	PART NUMBER	DESCRIPTION 1 2 3 4 5 6 7	UNITS PER ASSY	USABLE ON CODE
73 -33	0752018-8	DUCT ASSEMBLY-CARBURETOR AIR INTAKE	1	F
	0752018-200	DUCT ASSEMBLY-CARBURETOR AIR INTAKE	1	U
	0752018-9	DUCT ASSEMBLY-CARBURETOR AIR INTAKE	1	V
-33A	0752018-18	DUCT ASSEMBLY-CARBURETOR AIR INTAKE	1	AM
	0752018-23	DUCT ASSEMBLY-CARBURETOR AIR INTAKE	1	AN
-34	0752016-13	EXPANDER ASSEMBLY	1	U
	0752016-12	EXPANDER ASSEMBLY WEU 0752016-14	1	F
	0752016-6	BOOT-EXPANDER	1	U
	0752016-7	BOOT-EXPANDER	1	F
	0752016-10	SEAL-TOP & BOTTOM	2	
	0752016-11	SEAL-SIDE	2	
	S1853-3	RECEPTACLE	2	
	0752021-1	CLIP	2	
-35	0752023-1	STRIP-SIDE	2	
-36	0752023-3	STRIP-TOP & BOTTOM	2	W
	0752023-5	STRIP-TOP & BOTTOM	2	X
	0752047-1	STIFFENER-TOP	1	X
-37	0750192-2	EXPANDER BOOT WEU 07520192-3	1	AJ
	0750192-3	EXPANDER BOOT	1	AK
-38	1650021-2	RETAINER ASSEMBLY	1	V
-39	0752023-1	STRIP-SIDE	2	
-40	0752023-3	STRIP-TOP & BOTTOM	2	Y
	0752023-4	STRIP-TOP & BOTTOM	2	Z
-41	0752018-10	DUCT SUB ASSEMBLY	1	
-41A	0752018-13	DUCT SUB ASSEMBLY	1	AM
	0752018-22	DUCT SUB ASSEMBLY	1	AN
-41B	1652013-28	DUCT ADAPTOR ASSEMBLY	1	AL
-41C	1652013-25	DOOR ASSEMBLY	1	AL
-41D	0752035-1	SCOOP-PUMP COOLING	1	G
	AN960-4L	WASHER	12	G
-42	0752031-30	NOSE CAP ASSEMBLY-LOWER WHEN EXHAUSTED USE 0752031-202-	1	C
	0752031-202	NOSE CAP ASSEMBLY-LOWER	1	D
	0752031-207	NOSE CAP ASSEMBLY-LOWER	1	AQ
	0752030-15	NOSE CAP ASSEMBLY-LOWER	1	AN
-43	0752020-1	MOUNT ASSEMBLY-FILTER	1	AR
	0752020-3	MOUNT ASSEMBLY-FILTER	1	AN
-44	CM2791	SNAP RING CLC	2	AF
	4002H	GROMMET CLC	2	AF
	4002-4	STUD-SLOTTED HEAD CLC	2	AF
	4OS5-4	STUD-SLOTTED HEAD CLC	2	AF
	CM2791	SNAP RING CLC LH SIDE ONLY	1	AQ
	4002H	GROMMET CLC LH SIDE ONLY	1	AQ
	4OS5-4	STUD-PHILLIPS HEAD CLC LH SIDE ONLY	1	AQ
	GA5-375	GROMMET DZ RH SIDE ONLY	1	AQ
	A5-35PR	STUD DZ RH SIDE ONLY	1	AQ
-45	0752013-2	CLIP-COWL NOSE RH	1	
	0752013-1	CLIP-COWL NOSE LH	1	
-45A	CM2791	SNAP RING CLC LH SIDE ONLY	1	AN
	4002H	GROMMET CLC LH SIDE ONLY	1	AN
	4OS5-4	STUD CLC LH SIDE ONLY	1	AN
	GA5-375	GROMMET DZ RH SIDE ONLY	1	AN
	A5-35PR	STUD DZ RH SIDE ONLY	1	AN
-46	0752025-1	DOOR ASSEMBLY-COWL ACCESS	1	M
	0752628-1	DOOR ASSEMBLY-COWL ACCESS	1	N
	0752025-7	HINGE ASSEMBLY	1	
	MS20253-2-695	PIN-HINGE	1	
-47	S1188-1	LATCH-DOOR	1	M
-47A	W98292-1-.130	STUD	2	N
	AN960D516L	WASHER	2	N
	99836	PIN-CROSS	2	N
	99874	GROMMET	2	N
-48	MS24665-134	PIN-COTTER	2	M
	S1397-1	PLACARD	1	J
-49	0752014-23	FLAP ASSEMBLY-COWL LH WHEN EXHAUSTED USE 0752014-1	1	A
	0752014-1	FLAP ASSEMBLY-COWL LH	1	B
-50	0752014-17	BRACKET	1	
-51	0752014-28	BAFFLE-RH	1	A
	0752014-9	BAFFLE-RH	1	B
-52	0752014-25	BAFFLE-LH	1	A
	0752014-11	BAFFLE-LH	1	B

CONTINUED ON NEXT PAGE

FIGURE AND INDEX NO.	PART NUMBER	DESCRIPTION 1 2 3 4 5 6 7	UNITS PER ASSY	USABLE ON CODE
73 -53	0752014-15	HINGE ASSEMBLY	1	
		ATTACHING PARTS		
-54	CR163-4-4	RIVET CY	6	
		---*---		
-55	0752609-2	PIN-HINGE WEU 0752609-27	1	AG
	0752609-27	PIN-HINGE	1	AH
-56	0752014-24	FLAP ASSEMBLY-COWL RH WHEN EXHAUSTED USE 0752014-2	1	A
	0752014-2	FLAP ASSEMBLY-COWL RH	1	B
-57	0752014-17	BRACKET	1	
-58	0752014-26	BAFFLE-RH	1	A
	0752014-10	BAFFLE-RH	1	B
-59	0752014-27	BAFFLE-LH	1	A
	0752014-12	BAFFLE-LH	1	B
-60	0752014-15	HINGE ASSEMBLY	1	
		ATTACHING PARTS		
-61	CR163-4-4	RIVET CY	6	
		---*---		
-62	0752609-2	PIN-HINGE WEU 0752609-27	1	AG
	0752609-27	PIN-HINGE	1	AH
-63	0750038-1	FILTER ASSEMBLY-AIR BOX WEU 0750038-4	1	P
	0750146-1	FILTER ASSEMBLY-AIR BOX FLOATPLANE ONLY WEU 0750038-4	1	P
	0750038-4	FILTER ASSEMBLY-AIR BOX	1	R
	121553	FILTER ASSEMBLY-OIL DIPPED FLOATPLANE ONLY	1	
	0750038-3	GASKET	1	
	0750146-3	GASKET FLOATPLANE ONLY WEU 0750146-4	1	
	0750146-4	GASKET FLOATPLANE ONLY	1	
-64	98293-16-2.250	STUD UC	4	
	S1853-4	PIN	4	
-65	S1053E20T	DUCT-SCOOP	1	G
		ATTACHING PARTS		
-66	NAS398-42	CLAMP	2	
		---*---		
-67	0716104-3	INLET ASSEMBLY	1	H
	0716131-1	INLET ASSEMBLY	1	K
-68	28S7-4	STUD-CAMLOC	1	
	28S10-2	WASHER-CAMLOC	1	

A---SERIAL 185-0001 THRU 185-0284
B---SERIAL 185-0285 THRU 18502090
SERIAL 18051184 THRU 18052284
C---SERIAL 185-0001 THRU 185-0229
D---SERIAL 185-0230 THRU 185-1431
SERIAL 18051184 THRU 18051980
E---SERIAL 185-0230 THRU 185-1431
F---SERIAL 18051184 THRU 18052284
G---SERIAL 185-0001 THRU 18502090
H---SERIAL 185-0001 THRU 185-0512
J---SERIAL 185-0513 THRU 185-0776
SERIAL 18051184 THRU 18051445
K---SERIAL 185-0513 THRU 18502090
L---SERIAL 185-0001 THRU 185-0776
SERIAL 18051184 THRU 18051445
M---SERIAL 185-0001 THRU 185-0776
SERIAL 18051184 THRU 18051445
N---SERIAL 185-0777 THRU 18502090
SERIAL 18051446 THRU 18052284
P---SERIAL 185-0001 THRU 185-0987
SERIAL 18051184 THRU 18051645
R---SERIAL 185-0988 THRU 18502090
SERIAL 18051646 THRU 18052284
S---SERIAL 185-0001 THRU 185-1149
SERIAL 18051184 THRU 18051774
T---SERIAL 185-1150 THRU 18502090
SERIAL 18051775 THRU 18052284
U---SERIAL 185-0001 THRU 18501832
V---SERIAL 18501833 THRU 18502007, 18502026, 18502027

CONTINUED ON NEXT PAGE

FIGURE AND INDEX NO.	PART NUMBER	DESCRIPTION 1 2 3 4 5 6 7	UNITS PER ASSY	USABLE ON CODE
73 -		W---SERIAL 185-0001 THRU 18501759, 18501761, 18501764 THRU 18501778		
		SERIAL 18051184 THRU 18052154		
		X---SERIAL 18501760, 18501762, 18501763, 18501779 THRU 18502090		
		SERIAL 18052155 THRU 18052284		
		Y---SERIAL 185-0001 THRU 185-1577		
		SERIAL 18051184 THRU 18052093		
		Z---SERIAL 185-1578 THRU 18502007, 18502026, 18502027		
		SERIAL 18052094 THRU 18052284		
		AA---SERIAL 185-0777 THRU 185-1431		
		SERIAL 18051446 THRU 18051980		
		AB---SERIAL 185-1432 THRU 18502090		
		SERIAL 18051981 THRU 18052284		
		AC---SERIAL 185-1432 THRU 18501832		
		AD---SERIAL 18051184 THRU 18051980		
		AE---SERIAL 18051981 THRU 18052284		
		AF---SERIAL 185-0001 THRU 185-1431		
		SERIAL 18051184 THRU 18051980		
		AG---SERIAL 185-0001 THRU 18501700		
		SERIAL 18051184 THRU 18052143		
		AH---SERIAL 18501701 THRU 18502090		
		SERIAL 18052144 THRU 18052284		
		AJ---SERIAL 18501833 THRU 18501934		
		AK---SERIAL 18501935 THRU 18502007, 18502026, 18502027		
		AL---SERIAL 18502008 THRU 18502025, 18502028 THRU 18502090		
		AM---SERIAL 18502008 THRU 18502025, 18502028 THRU 18502082		
		AN---SERIAL 18502082 THRU 18502090		
		AP---SERIAL 185-0001 THRU 18502007, 18502026, 18502027		
		SERIAL 18051184 THRU 18052284		
		AQ---SERIAL 185-1432 THRU 18502082		
		SERIAL 18051981 THRU 18052284		
		AR---SERIAL 185-0001 THRU 18502082		
		SERIAL 18051184 THRU 18052284		
		AS---SERIAL 185-0001 THRU 18502090		
		SERIAL 18051184 THRU 18052284		

Cowling (Cont)

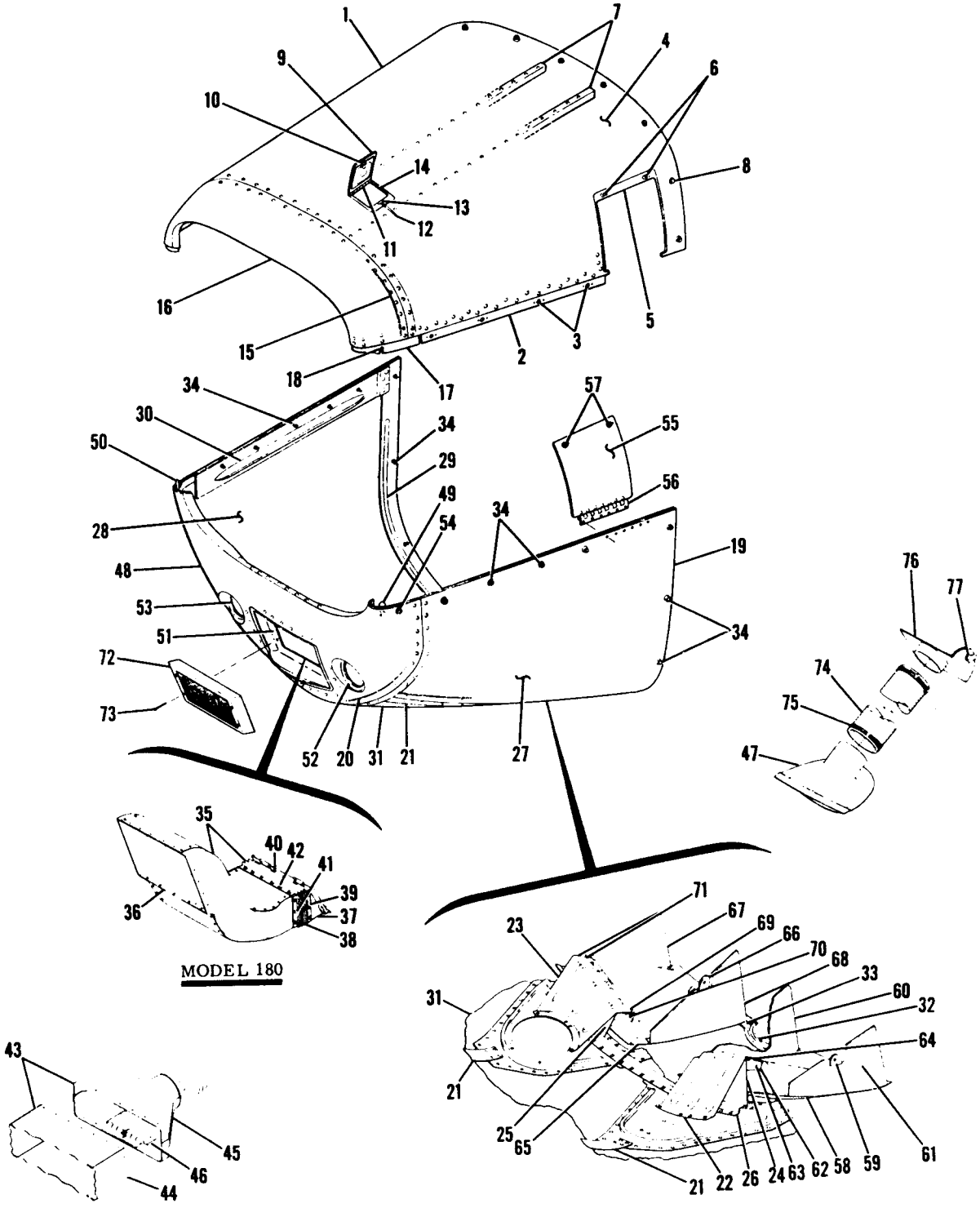

SERIAL 18502091 THRU 18502310
SERIAL 18052285 THRU 18052384

Figure 73A. Engine Cowl Installation

FIGURE AND INDEX NO.	PART NUMBER	DESCRIPTION 1 2 3 4 5 6 7	UNITS PER ASSY	USABLE ON CODE
73A-		COWL INSTALLATION-ENGINE	NP	A
- 1	0752031-208	COWL ASSEMBLY-UPPER	1	
- 2	0752031-19	STRIP-PARTING LH	1	
	0752031-20	STRIP-PARTING RH	1	
- 3	4002-244-16	RECEPTACLE CLC	9	
- 4	0752031-50	SKIN ASSEMBLY	1	
- 5	0752031-49	DOUBLER-COWL ACCESS DOOR	1	
- 6	99833P.098	RECEPTACLE	2	
- 7	0752031-26	ANGLE-UPPER COWL	2	
- 8	CM2791	SNAP RING CLC	10	
	4002H	GROMMET CLC	10	
	40S5-4	STUD CLC	10	
- 9	0752626-1	DOOR ASSEMBLY-OIL	1	
-10	KM610-64	LATCH	1	
-11	0752000-117	HINGE ASSEMBLY	1	
-12	0752627-1	SPRING-OIL FILLER DOOR ASSIST	1	
-13	0752031-51	LATCH PLATE	1	
-14	0752031-52	DOUBLER-OIL FILLER DOOR	1	
-15	0752031-22	STRIP-SPLICE	1	
-16	0752031-206	NOSE CAP ASSEMBLY-UPPER COWL	1	
-17	0752030-9	DOUBLER-CAP SPLICE LH	1	
	0752030-8	DOUBLER-CAP SPLICE RH	1	
	0752019-11	STRAP-REINFORCING LH	1	
	0752019-10	STRAP-REINFORCING RH	1	
-18	0752032-1	RECEPTACLE LH SIDE ONLY	1	
	S5A200	SPRING RH SIDE ONLY DZ	1	B
-19	0752031-213	COWL ASSEMBLY-LOWER LESS FLAPS & DOORS	1	C
	0752031-214	COWL ASSEMBLY-LOWER LESS FLAPS & DOORS	1	
-20	0752015-10	DOUBLER-LOWER NOSE CAP	2	
-21	0752015-31	DOUBLER-COWL SPLICE LOWER	1	
-22	0752015-19	BRACKET-HINGE LH	1	
-23	0752015-39	BRACKET-HINGE RH	1	
-24	0752015-21	BRACKET-HINGE LH	1	
-25	0752015-22	BRACKET-HINGE RH	1	
-26	0752022-1	STIFFENER	1	
-27	0752031-7	SKIN ASSEMBLY-LOWER COWL SIDE LH	1	
-28	0752031-8	SKIN ASSEMBLY-LOWER COWL SIDE RH	1	
-29	0752031-16	DOUBLER-AFT RH	1	
	0752031-56	DOUBLER-AFT LH	1	
-30	0752031-18	DOUBLER-LOWER PARTING RH	1	
	0752031-17	DOUBLER-LOWER PARTING LH	1	B
-31	0752031-9	SKIN ASSEMBLY-LOWER COWL CENTER	1	C
	0752031-36	SKIN ASSEMBLY-LOWER COWL CENTER	1	
-32	0752015-23	DOUBLER-LOWER COWL	2	
-33	CM2791	SNAP RING CLC	2	
	4002G	GROMMET CLC	2	
	40S5-3	STUD CLC	17	
-34	CM2791	SNAP RING CLC	17	
	4002H	GROMMET CLC	17	
	40S5-3	STUD CLC	1	B
-35	0752018-8	DUCT ASSEMBLY-CARBURETOR AIR INTAKE	1	B
-36	0752018-10	DUCT SUB ASSEMBLY	1	B
-37	0752016-14	EXPANDER ASSEMBLY	1	B
-38	0752016-7	BOOT-EXPANDER	2	B
	0752016-10	SEAL-TOP & BOTTOM	2	B
	0752016-11	SEAL-SIDE	2	B
	S1853-3	RECEPTACLE	2	B
	0752021-1	CLIP	2	B
-39	0752023-1	STRIP-SIDE	2	B
-40	0752023-5	STRIP-TOP & BOTTOM	1	B
	0752047-1	STIFFENER-TOP	2	B
-41	0752023-1	STRIP-SIDE	2	B
-42	0752023-4	STRIP-TOP & BOTTOM	1	C
-43	0752018-27	DUCT ASSEMBLY-INDUCTION AIR INTAKE	1	C
-44	0752018-25	DUCT SUB ASSEMBLY	1	C
-45	1652013-35	DUCT ADAPTOR ASSEMBLY	1	C
-46	1652013-25	DOOR ASSEMBLY		

CONTINUED ON NEXT PAGE

FIGURE AND INDEX NO.	PART NUMBER	DESCRIPTION 1 2 3 4 5 6 7	UNITS PER ASSY	USABLE ON CODE
73A-47	0752035-1	SCOOP-PUMP COOLING	1	C
	AN960-4L	WASHER	12	C
-48	0752030-20	NOSE CAP ASSEMBLY-LOWER	1	B
	0752030-18	NOSE CAP ASSEMBLY-LOWER	1	C
-49	0752013-1	CLIP-COWL NOSE LH	1	
-50	0752013-2	CLIP-COWL NOSE RH	1	
-51	0752020-1	MOUNT ASSEMBLY-FILTER	1	B
	0752020-3	MOUNT ASSEMBLY-FILTER	1	C
-52	1652012-9	SUPPORT ASSEMBLY-LANDING LIGHT LH	1	
-53	1652012-6	SUPPORT ASSEMBLY-LANDING LIGHT RH	1	
	NAS697A08	NUTPLATE	3	
-54	CM2791	SNAP RING CLC LH SIDE ONLY	1	
	4002H	GROMMET CLC LH SIDE ONLY	1	
	40S5-4	STUD CLC LH SIDE ONLY	1	
	GA5-375	GROMMET DZ RH SIDE ONLY	1	
	A5-35PR	STUD DZ RH SIDE ONLY	1	
-55	0752628-1	DOOR ASSEMBLY-COWL ACCESS	1	
-56	0752025-7	HINGE ASSEMBLY	1	
	MS20253-2-695	PIN-HINGE	1	
-57	W98292-1-.130	STUD	2	
	AN960D516L	WASHER	2	
	99836	PIN-CROSS	2	
	99874-1	GROMMET	2	
-58	0752014-1	FLAP ASSEMBLY-COWL LH	1	
-59	0752014-17	BRACKET	1	
-60	0752014-9	BAFFLE-RH	1	
-61	0752014-11	BAFFLE-LH	1	
-62	0752014-15	HINGE ASSEMBLY	1	
		ATTACHING PARTS		
-63	CR163-4-4	RIVET CY	6	
		---*---		
-64	0752609-27	PIN-HINGE	1	
-65	0752014-2	FLAP ASSEMBLY-COWL RH	1	
-66	0752014-17	BRACKET	1	
-67	0752014-10	BAFFLE-RH	1	
-68	0752014-12	BAFFLE-LH	1	
-69	0752014-15	HINGE ASSEMBLY	1	
		ATTACHING PARTS		
-70	CR163-4-4	RIVET CY	6	
		---*---		
-71	0752609-27	PIN-HINGE	1	
-72	0750038-4	FILTER ASSEMBLY-AIR BOX LANDPLANE & FLOATPLANE	1	
	121553	FILTER ASSY-OIL DIPPED FLOATPLANE ONLY	1	
	0750038-3	GASKET	1	
-73	98293-16-2.250	STUD UC	4	
	S1853-4	PIN	4	
-74	S1053E20T	DUCT-SCOOP	1	C
		ATTACHING PARTS		
-75	NAS398-42	CLAMP	2	C
		---*---		
-76	0716131-1	INLET ASSEMBLY	1	C
-77	28S7-4	STUD	1	
	28S10-2	WASHER	1	

A---SERIAL 18502091 THRU 18502310
SERIAL 18052285 THRU 18052384
B---SERIAL 18052285 THRU 18052384
C---SERIAL 18502091 THRU 18502310

FIGURE AND INDEX NO.	PART NUMBER	DESCRIPTION 1 2 3 4 5 6 7	UNITS PER ASSY	USABLE ON CODE
74 -		ENGINE INSTALLATION	NP	M
- 1	SEE FIG 76	ENGINE ASSEMBLY-260 HP	1	C
	SEE FIG 76	ENGINE ASSEMBLY-300 HP	1	L
		ATTACHING PARTS		
- 2	0550153-1	WASHER	4	
- 3	AN6-24A	BOLT	2	
- 4	0751005-1	WASHER	2	D
	0751005-3	WASHER	2	E
- 4A	0751005-2	WASHER	2	D
	0751005-4	WASHER	2	E
- 5	MS20365-624C	NUT	4	
- 6	AN960-616	WASHER	2	
		---*---		
- 7	1213228-3	CONTROL-THROTTLE	1	A
	S1294-1	CONTROL-THROTTLE	1	U
	S1294-2	CONTROL-THROTTLE WEU C299505-0301	1	V
	C299505-0301	CONTROL-THROTTLE	1	W
- 8	1213229-2	CONTROL-MIXTURE	1	A
	S1220-4	CONTROL-MIXTURE	1	U
	S1220-9	CONTROL-MIXTURE WEU C299507-0201	1	V
	C299507-0201	CONTROL-MIXTURE	1	W
		ATTACHING PARTS		
- 9	S351	CLAMP	2	X
-10	AN3-7A	BOLT	2	X
-11	AN960-10L	WASHER	2	X
-12	MS21044N3	NUT	3	X
-13	AN3-7A	BOLT USED ON THROTTLE CONTROL ONLY	1	X
-14	NAS43HT3-14	SPACER USED ON THROTTLE CONTROL ONLY	1	X
-15	AN3-5A	BOLT USED ON MIXTURE CONTROL ONLY	1	X
-15A	S1450-3-10-032	WASHER	1	X
-16	HF3	ROD END HEC	1	X
-16A	AN315-3R	NUT	1	X
	AN356-1032	NUT	1	X
		---*---		
-16B	0750166-4	BRACKET ASSEMBLY	1	
-17	S1230-2	CONTROL-INDUCTION AIR	1	R
	S1230-6	CONTROL-INDUCTION AIR	1	S
		ATTACHING PARTS		
-18	0450311-5	CLAMP	1	T
-19	AN960-10L	WASHER	1	T
-20	MS21044N3	NUT	1	T
-21	AN742D3	CLAMP	1	T
-22	NAS446-4-3	NUT	1	T
-23	S1021Z8-6	SCREW	1	T
		---*---		

CONTINUED ON NEXT PAGE

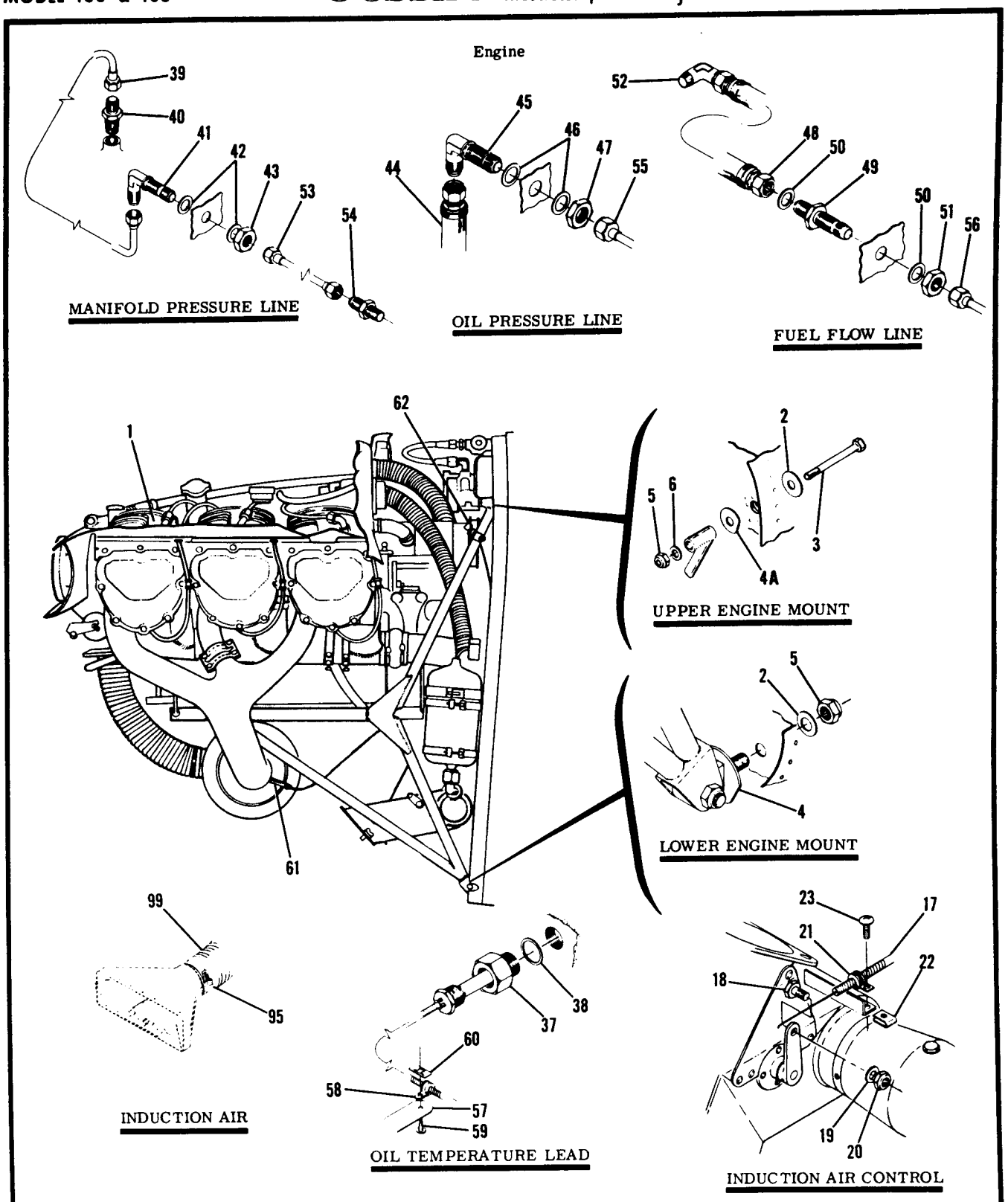

SERIAL 185-0968 THRU 18502310 (300 HP)
SERIAL 185-0001 THRU 185-1149 (260 HP)

Figure 74. (Sheet 1 of 2) Engine Installation

Engine (Cont)

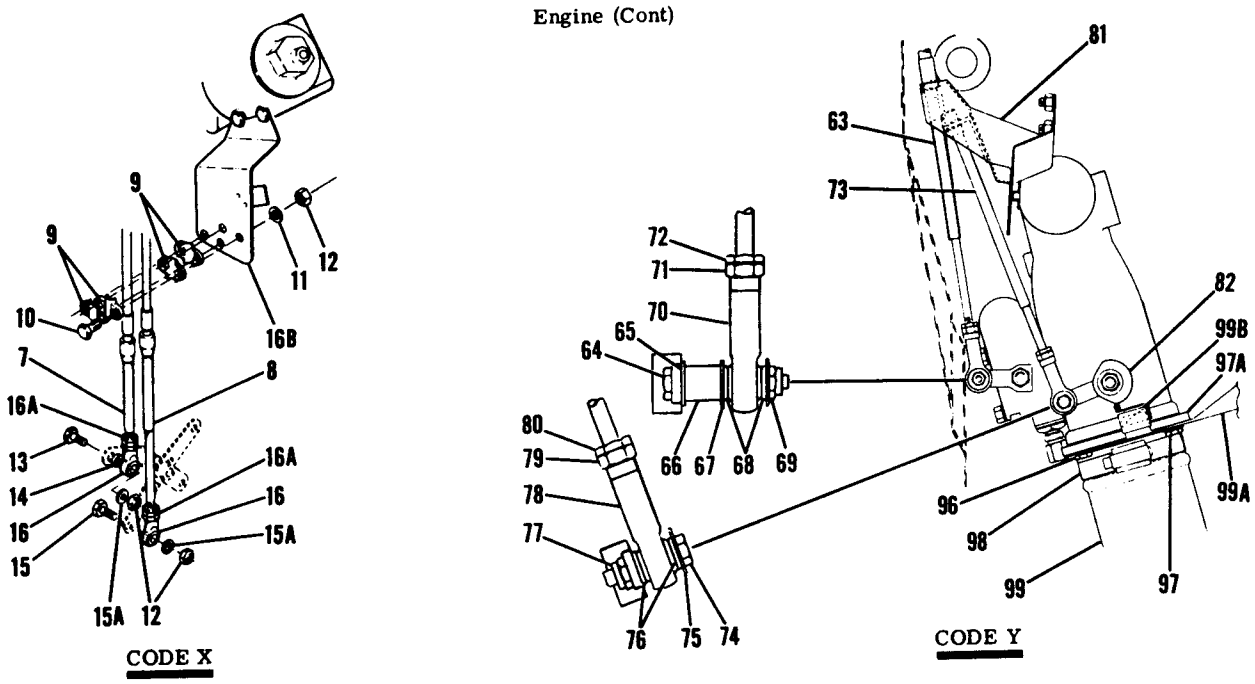

THROTTLE & MIXTURE CONTROLS

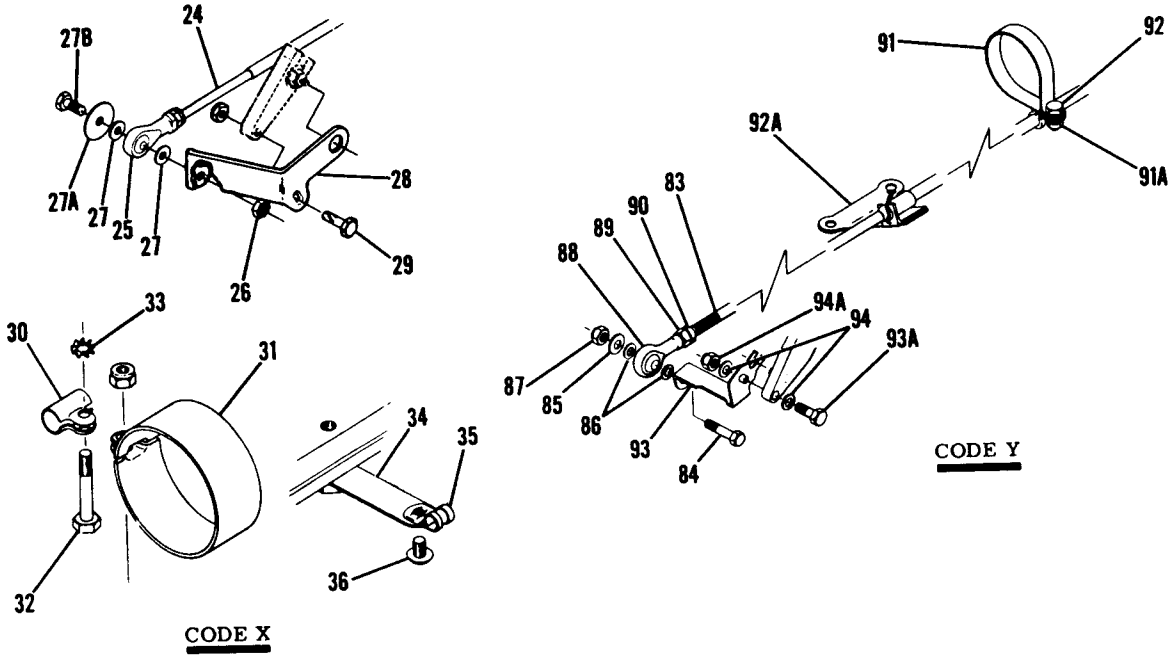

PROP GOVERNOR CONTROL & CLAMPS

SERIAL 185-0968 THRU 18502310 (300 HP)
SERIAL 185-0001 THRU 185-1149 (260 HP)

Figure 74. (Sheet 2 of 2) Engine Installation

FIGURE AND INDEX NO.	PART NUMBER	DESCRIPTION 1 2 3 4 5 6 7	UNITS PER ASSY	USABLE ON CODE
74 -24	S1223-5	CONTROL ASSEMBLY-PROPELLER GOVERNOR	1	T
	S1223-8	CONTROL ASSEMBLY-PROPELLER GOVERNOR WEU C299506-0103	1	V
	C299506-0103	CONTROL ASSEMBLY-PROPELLER GOVERNOR	1	W
		ATTACHING PARTS	1	X
-25	S1104-3	ROD END	1	X
-26	MS21044N3	NUT	2	X
-27	AN960D10	WASHER	1	X
-27A	S1450-3-10-032	WASHER	1	X
-27B	AN3-7A	BOLT	1	X
-28	0750138	ARM-GOVERNOR CONTROL USED WITH WOODARD & GARWIN GOVERNORS	1	X
	0750202-1	ARM-GOVERNOR CONTROL USED WITH HOOF GOVERNOR	1	X
	AN520-10R8	SCREW	1	X
-29	AN3-5A	BOLT USED WITH WOODARD GOVERNOR	1	X
	AN3-12A	BOLT USED WITH HOOF GOVERNOR	1	X
	AN960-10	WASHER USED WITH HOOF GOVERNOR	2	X
	NAS43HT3-6	SPACER USED WITH HOOF GOVERNOR	1	X
	NAS697A3	NUT	1	X
-30	0450191-1	CLAMP	1	X
-31	AN741-18P	CLAMP	1	X
-32	AN3-12A	BOLT	1	X
	MS21044N3	NUT	1	X
-33	AN936B10	WASHER	1	X
-34	0550100-9	BRACKET	1	X
-35	S1486DG5L	CLAMP	1	X
-36	S1021Z8-8	SCREW		
		---*---	1	
-37	0750139	ADAPTER-OIL TEMPERATURE	1	
-38	AN900-10	GASKET	1	A
-39	S1168-2-26 3/4	LINE ASSEMBLY-MANIFOLD PRESSURE ENGINE TO FIREWALL	1	B
	S1168-2-8 1/2	HOSE ASSEMBLY-MANIFOLD PRESSURE		
		ATTACHING PARTS	1	
-40	AN816-2D	NIPPLE	1	
-41	AN833-2D	ELBOW	2	
-42	AN960D516	WASHER	1	
-43	AN924-2D	NUT		
		---*---	1	
-44	SEE FIG 76	HOSE ASSEMBLY-OIL PRESSURE		
		ATTACHING PARTS	1	
-45	AN833-4D	ELBOW	2	
-46	AN960D716	WASHER	1	
-47	AN924-4D	NUT		
		---*---	1	F
-48	S1236-3-0294	HOSE ASSEMBLY-FUEL PRESSURE ENGINE TO FIREWALL	1	G
	0700147-16	LINE-FUEL PRESSURE ENGINE TO FIREWALL WHEN EXHAUSTED USE 0700147-46	1	G
	0700147-46	LINE-FUEL PRESSURE ENGINE TO FIREWALL		
		ATTACHING PARTS	1	F
-49	AN832-3D	UNION	1	G
	AN832-2D	UNION	2	F
-50	AN960D616	WASHER	2	G
	AN960D516	WASHER	1	F
-51	AN924-3D	NUT	1	G
	AN924-2D	NUT	1	F
-52	0756003-1	ELBOW-RESTRICTOR	1	G
	MS20822-2D	ELBOW		
		---*---	1	J
-53	0500106-273	LINE ASSEMBLY-MANIFOLD PRESSURE FIREWALL TO PANEL WHEN EXHAUSTED USE 0500118-96	1	J
	0500118-96	LINE ASSEMBLY-MANIFOLD PRESSURE FIREWALL TO PANEL	1	K
	0500106-248	LINE ASSEMBLY-MANIFOLD PRESSURE FIREWALL TO PANEL WHEN EXHAUSTED USE 0500118-114	1	K
	0500118-114	LINE ASSEMBLY-MANIFOLD PRESSURE FIREWALL TO PANEL		
		ATTACHING PARTS	1	
-54	AN816-2D	NIPPLE		
		---*---	1	
-55	0500106-292	LINE ASSEMBLY-OIL PRESSURE FIREWALL TO PANEL	1	F
-56	0500106-341	LINE ASSEMBLY-FUEL FLOW FIREWALL TO PANEL	1	G
	0700087-18	LINE ASSEMBLY-FUEL FLOW FIREWALL TO PANEL WHEN EXHAUSTED USE 0700099-84	1	G
	0700099-84	LINE ASSEMBLY-FUEL FLOW FIREWALL TO PANEL	2	
-57	0550100-9	BRACKET OIL TEMPERATURE LEAD		

CONTINUED ON NEXT PAGE

FIGURE AND INDEX NO.	PART NUMBER	DESCRIPTION 1 2 3 4 5 6 7	UNITS PER ASSY	USABLE ON CODE
74 -58	S1486DG3U	CLAMP	2	
-59	S1021Z8-8	SCREW	2	
-60	NAS446-4-3	NUT	2	
-61	C668501-0102	PROBE-ECONOMY POWER INDICATOR WHEN EXHAUSTED	1	H
		USE C668501-0110		
	C668501-0110	PROBE-ECONOMY POWER INDICATOR	1	N
	C668501-0204	PROBE-ECONOMY POWER INDICATOR	1	P
	AN515-4R4	SCREW	2	
-62	S1517-2	CONTROL ASSEMBLY-STRAINER DRAIN	1	Q
	S1517-4	CONTROL ASSEMBLY-STRAINER DRAIN FLOATPLANE ONLY	1	Q
		ATTACHING PARTS		
	0750230-1	CLAMP ATTACH TO MOTOR MOUNT	1	Q
	AN741TD7	CLAMP ATTACH TO MOTOR MOUNT	1	Q
	AN4-6A	BOLT	2	Q
	AN960-10L	WASHER	2	Q
	NAS679A4	NUT	2	Q
	AN742D4	CLAMP ATTACH TO FIREWALL	1	Q
	S1021Z8-14	SCREW	1	Q
	NAS43DD2-16A	SPACER	1	Z
	NAS43DD2-12A	SPACER	1	Y
	NAS446-4-3	NUT	1	Q
		---*---		
-63	C299507-0401	CONTROL ASSY-MIXTURE	1	Y
		ATTACHING PARTS		
-64	AN3-13A	BOLT	1	Y
-65	AN960-10L	WASHER	1	Y
-66	1650037-1	SPACER	1	Y
-67	S1450-3-10-032	WASHER	2	Y
-68	AN960-10	WASHER	2	Y
-69	MS20364-1032C	NUT	1	Y
-70	S1104-3	ROD END	1	Y
-71	AN315-3R	NUT	1	Y
-72	AN356-1032	NUT-LOCK	1	Y
		---*---		
-73	C299505-0501	CONTROL ASSEMBLY-THROTTLE	1	Y
		ATTACHING PARTS		
-74	AN3-10A	BOLT	1	Y
-75	S1450-3-10-032	WASHER	1	Y
-76	AN960-10	WASHER	2	Y
-77	MS20364-1032C	NUT	1	Y
-78	S1104-3	ROD END	1	Y
-79	AN315-3R	NUT	1	Y
-80	AN356-1032	NUT-LOCK	1	Y
		---*---		
-81	0750195-7	BRACKET ASSEMBLY	1	Y
-82	1450009-1	CAM	1	Y
	AN960-516	WASHER	1	Y
	AN320-5	NUT	1	Y
-83	C299506-0201	CONTROL ASSEMBLY-PROPELLER GOVERNOR	1	Y
		ATTACHING PARTS		
-84	AN3-10A	BOLT	1	Y
-85	S1450-3-10-032	WASHER	2	Y
-86	AN960-10	WASHER	1	Y
-87	MS20364-1032C	NUT	1	Y
-88	S1104-3	ROD END	1	Y
-89	AN315-3R	NUT	1	Y
-90	AN356-1032	NUT-LOCK	1	Y
-91	AN742D36	CLAMP	1	Y
-91A	MS21919DG6	CLAMP	1	Y
-92	AN3-5A	BOLT	1	Y
	AN960-10L	WASHER	1	Y
	MS20364-1032C	NUT		
		---*---		

CONTINUED ON NEXT PAGE

FIGURE AND INDEX NO.	PART NUMBER	DESCRIPTION 1 2 3 4 5 6 7	UNITS PER ASSY	USABLE ON CODE
74 -92A	1650031-5	SUPPORT ASSEMBLY	1	Y
-93	1650031-1	ARM	1	Y
		ATTACHING PARTS		
-93A	AN3-6A	BOLT	1	Y
-94	AN960-10L	WASHER	2	Y
-94A	MS20364-1032C	NUT	1	Y
		---*---		
	1652013-5	DUCT ASSEMBLY	1	Y
		ATTACHING PARTS		
-95	S1891-48	CLAMP	1	Y
-96	MS20074-04-06	BOLT	2	Y
-97	MS20074-04-05	BOLT	2	Y
	AN960-416L	WASHER	4	
		---*---		
-97A	1652013-3	RETAINER ASSEMBLY	1	Y
-98	S1891-48	CLAMP	1	Y
-99	SCEETS12-56-4	DUCT	1	Y
	A615	EYELET	1	Y
	AN960P08L	WASHER	1	Y
-99A	639411	SUPPORT BRACKET RH TCM	1	Y
	639410	SUPPORT BRACKET LH TCM	1	Y
-99B	12SE1-3	SWITCH	1	Y
	JE5	ACTUATOR-SWITCH	1	Y
	0750341-1	BRACKET	1	Y
	1560218-1	PLATE ASSEMBLY	1	Y
		A---SERIAL 185-0001 THRU 185-0237		
		B---SERIAL 185-0238 THRU 18502310		
		C---SERIAL 185-0001 THRU 185-1149 260 HP		
		D---SERIAL 185-0001 THRU 185-0579		
		E---SERIAL 185-0580 THPU 18502310		
		F---SERIAL 185-0001 THRU 185-0653		
		G---SERIAL 185-0654 THRU 18502310		
		H---SERIAL 185-0777 THRU 185-0993		
		J---SERIAL 185-0001 THRU 185-0800		
		K---SERIAL 185-0801 THRU 18502310		
		L---SERIAL 185-0968 THRU 18502310 300 HP		
		M---SERIAL 185-0001 THRU 185-1149 260 HP		
		SERIAL 185-0968 THRU 18502310 300 HP		
		N---SERIAL 185-0994 THRU 185-1116		
		P---SERIAL 185-1117 THRU 18502310		
		Q---SERIAL 185-1301 THRU 18502310		
		R---SERIAL 185-0001 THRU 185-0776		
		S---SERIAL 185-0777 THRU 185-1300		
		T---SERIAL 185-0001 THRU 185-1300		
		U---SERIAL 185-0238 THRU 185-1300		
		V---SERIAL 185-1301 THRU 18501741		
		W---SERIAL 18501742 THRU 18502007, 18502026, 18502027		
		X---SERIAL 185-0001 THRU 18502007, 18502026, 18502027		
		Y---SERIAL 18502008 THRU 18502025,		
		18502028 THRU 18502310		
		Z---SERIAL 185-1301 THRU 18502007, 18502026, 18502027		

FIGURE AND INDEX NO.	PART NUMBER	DESCRIPTION 1 2 3 4 5 6 7	UNITS PER ASSY	USABLE ON CODE
75 -		ENGINE INSTALLATION	NP	A
- 1	SEE FIG 77	ENGINE ASSEMBLY	1	
		ATTACHING PARTS		
- 2	AN6-34A	BOLT	2	B
	AN6-35A	BOLT	2	C
	AN6-35A	BOLT FLOATPLANE ONLY	2	X
			2	Y
- 2A	AN6-33A	BOLT	2	B
- 3	AN6-25A	BOLT	2	C
	AN6-26A	BOLT	2	X
	AN6-26A	BOLT FLOATPLANE ONLY	2	Y
- 3A	AN6-24A	BOLT	4	
- 4	MS20365-624C	NUT	4	B
- 5	0750031-1	STRAP-GROUND NOT USED ON FLOATPLANE	4	B
- 6	0550155	BUSHING-ENGINE MOUNT	4	C
	0751004-1	BUSHING-ENGINE MOUNT	4	X
	0751004-1	BUSHING-ENGINE MOUNT FLOATPLANE ONLY	4	Y
- 6A	0750209-1	WASHER-ENGINE MOUNT	4	B
- 7	0550154-2	PAD-ENGINE MOUNT	4	C
	0751004-2	PAD-ENGINE MOUNT	4	X
	0751004-2	PAD-ENGINE MOUNT FLOATPLANE ONLY	4	X
- 8	0550153-1	WASHER-ENGINE MOUNT	8	Y
	0550153-1	WASHER-ENGINE MOUNT	4	B
- 9	0550156	WASHER-ENGINE MOUNT	4	C
	0550153-1	WASHER-ENGINE MOUNT		
		---*---		
-10	0500106-202	LINE ASSEMBLY-PRIMER	1	H
	0700147-14	LINE ASSEMBLY-PRIMER	1	J
	0700147-17	LINE ASSEMBLY-PRIMER WHEN EXHAUSTED USE 0700147-47	1	N
	0700147-47	LINE ASSEMBLY-PRIMER	1	N
		ATTACHING PARTS		
	MS21919DG2	CLAMP	1	
	S1021Z8-6	SCREW	1	
	NAS446-4-3	NUT	1	
		---*---		
-11	S1230-2	CONTROL ASSEMBLY-CARBURETOR HEAT	1	D
	S1230-6	CONTROL ASSEMBLY-CARBURETOR HEAT	1	S
	S1230-11	CONTROL ASSEMBLY-CARBURETOR HEAT	1	R
		ATTACHING PARTS		
-12	AN742D3	CLAMP	1	
	NAS446-4-3	NUT	1	
	S1021Z8-12	SCREW	1	
	NAS43DD3-16	SPACER	1	
-13	AN742D4	CLAMP	1	
-14	AN3-3A	BOLT	1	
	MS21044N3	NUT	1	
-15	0450311-5	CLAMP-CARBURETOR HEAT	1	
-16	AN960-10L	WASHER	1	
-17	MS21044N3	NUT		
		---*---		

CONTINUED ON NEXT PAGE

Engine (Cont)

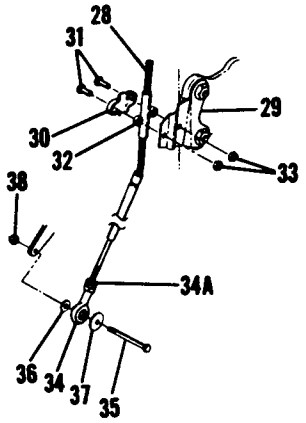

THROTTLE CONTROL

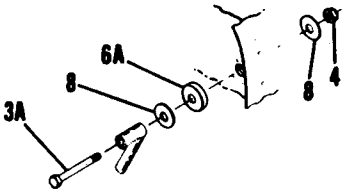

18051313 & ON

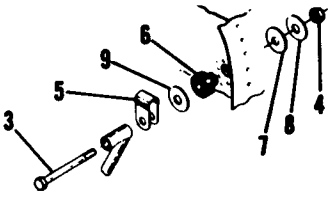

18051184 THRU 18051312

UPPER ENGINE MOUNTS

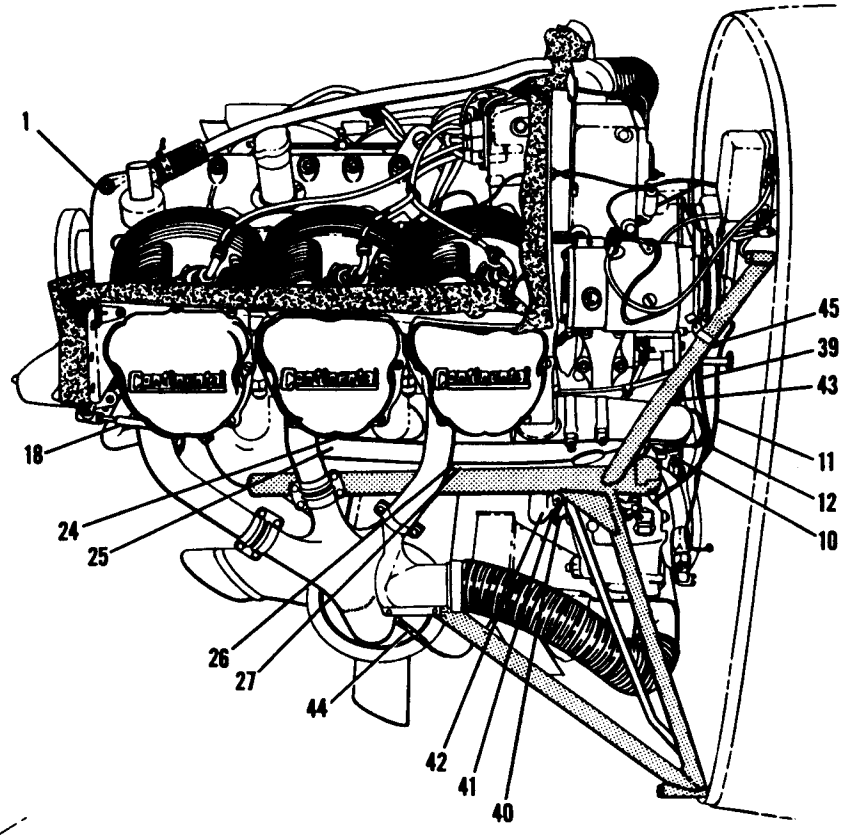

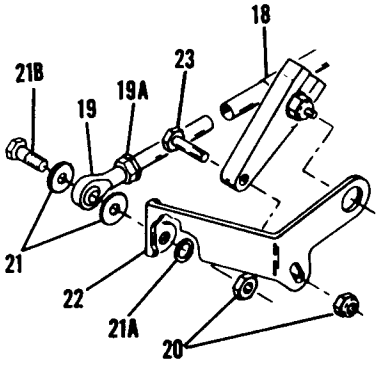

PROP GOV CONTROL

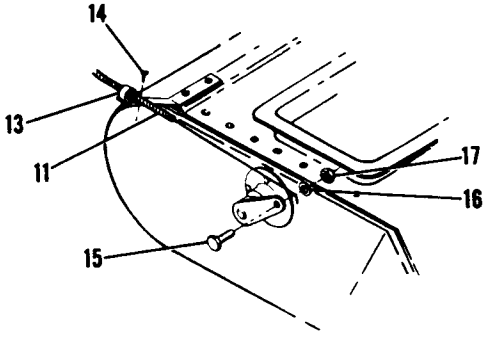

CARB HEAT CONTROL

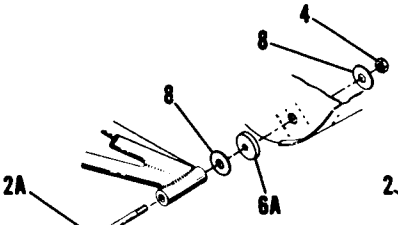

18051313 & ON

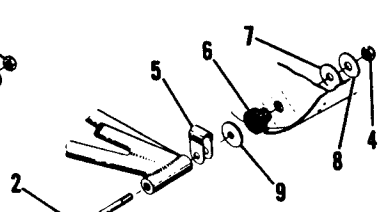

18051184 THRU 18051312

LOWER ENGINE MOUNTS

SERIAL 18051184 THRU 18052384

Figure 75. Engine Installation

FIGURE AND INDEX NO.	PART NUMBER	DESCRIPTION 1 2 3 4 5 6 7	UNITS PER ASSY	USABLE ON CODE
75 -18	S1223-4	CONTROL ASSEMBLY-PROPELLER	1	D
	S1223-5	CONTROL ASSEMBLY-PROPELLER	1	S
	S1223-8	CONTROL ASSEMBLY-PROPELLER WEU C299506-0103	1	U
	C299506-0103	CONTROL ASSEMBLY-PROPELLER	1	V
		ATTACHING PARTS		
-19	S1104-3	ROD END	1	
-19A	AN356-1032	NUT	1	
-20	MS20364-1032C	NUT	2	
-21	AN960D10	WASHER	2	
-21A	S1450-3-10-032	WASHER UNDER NUT	1	
-21B	AN3-7A	BOLT	1	
-22	0750138	ARM-PROPELLER CONTROL	1	
-23	AN3-5A	BOLT	1	
-24	0450191-1	CLAMP-PROPELLER CONTROL	1	
-25	AN741-18P	CLAMP	1	
	AN3-11A	BOLT	1	
	AN936B10	WASHER	2	
-26	0550100-9	BRACKET-PROPELLER CONTROL	1	
-27	S1486DG5U	CLAMP	1	
	S1021Z8-8	SCREW	1	
		---*---		
-28	S1222-1	CONTROL ASSEMBLY-THROTTLE	1	D
	S1222-13	CONTROL ASSEMBLY-THROTTLE	1	S
	S1222-16	CONTROL ASSEMBLY-THROTTLE WEU C299505-0201S	1	U
	C299505-0201S	CONTROL ASSEMBLY-THROTTLE	1	V
		ATTACHING PARTS		
-29	0750119	BRACKET-THROTTLE CONTROL	1	D
	0750223-1	BRACKET-THROTTLE CONTROL	1	P
	0750228-2	BRACKET-THROTTLE CONTROL WEU 0750233-1	1	Q
	0750233-1	BRACKET-THROTTLE CONTROL	1	W
-30	S351	CLAMP-THROTTLE CONTROL	1	
-31	AN3-6A	BOLT	2	
-32	NAS43HT3-9	SPACER	2	
-33	MS21044N3	NUT	2	
-34	S1106-4	ROD END-THROTTLE CONTROL	1	
-34A	NAS679A4	NUT	1	
-35	AN4-11A	BOLT	1	
-36	AN960C416L	WASHER	1	
-37	AN970-4	WASHER	1	
-38	NAS679A4	NUT	1	
		---*---		
-39	S1234-1	CONTROL ASSEMBLY-MIXTURE	1	T
	S1234-6	CONTROL ASSEMBLY-MIXTURE	1	R
		ATTACHING PARTS		
-40	0450311-4	CLAMP-MIXTURE CONTROL	1	
	NAS679A4	NUT	1	
	AN960-416L	WASHER	2	
-41	AN742D4	CLAMP	1	
-42	0750159-1	CLIP-MIXTURE CONTROL	1	
	AN3-3A	BOLT	1	
	MS21044N3	NUT	1	
	AN742D4	CLAMP	1	
	MS21919D6-11	CLAMP	1	
	S1021Z8-6	SCREW	1	
		---*---		
-43	0700087-19	LINE ASSEMBLY-MANIFOLD PRESSURE FIREWALL TO ENGINE	1	D
	0700147-10	LINE ASSEMBLY-MANIFOLD PRESSURE FIREWALL TO ENGINE	1	E
		WHEN EXHAUSTED USE 0700147-44		
	0700147-44	LINE ASSEMBLY-MANIFOLD PRESSURE FIREWALL TO ENGINE	1	E
		ATTACHING PARTS		
	MS21919DG2	CLAMP	1	
	S1021Z8-6	SCREW	1	
	NAS446-4-3	NUT	1	
	0750282-1	ADAPTER	1	
		---*---		
	0500106-273	LINE ASSEMBLY-MANIFOLD PRESSURE FIREWALL TO PANEL	1	F
		WHEN EXHAUSTED USE 0500118-96		
	0500118-96	LINE ASSEMBLY-MANIFOLD PRESSURE FIREWALL TO PANEL	1	F
	0500106-248	LINE ASSEMBLY-MANIFOLD PRESSURE FIREWALL TO PANEL	1	G
		WHEN EXHAUSTED USE 0500118-114		
	0500118-114	LINE ASSEMBLY-MANIFOLD PRESSURE FIREWALL TO PANEL	1	G

CONTINUED ON NEXT PAGE

FIGURE AND INDEX NO.	PART NUMBER	DESCRIPTION 1 2 3 4 5 6 7	UNITS PER ASSY	USABLE ON CODE
75 -44	C668501-0102	PROBE-ECONOMY POWER INDICATOR WHEN EXHAUSTED ----------	1	K
		USE C668501-0110		
	C668501-0110	PROBE-ECONOMY POWER INDICATOR ----------	1	L
	C668501-0204	PROBE-ECONOMY POWER INDICATOR ----------	1	M
	AN515-4R4	SCREW ----------	2	
-45	S1517-2	CONTROL ASSEMBLY-STRAINER DRAIN ----------	1	R
	S1517-4	CONTROL ASSEMBLY-STRAINER DRAIN FLOATPLANE ONLY ---------	1	R
		ATTACHING PARTS		
	0750230-1	CLAMP ATTACH TO MOTOR MOUNT ----------	1	R
	AN741TD7	CLAMP ATTACH TO MOTOR MOUNT ----------	1	R
	AN4-6A	BOLT ----------	2	R
	AN960-10L	WASHER ----------	2	R
	NAS679A4	NUT ----------	2	R
	AN742D4	CLAMP ATTACH TO FIREWALL ----------	1	R
	S1021Z8-14	SCREW ----------	1	R
	NAS43DD3-16	SPACER ----------	1	R
	NAS446-4-3	NUT ----------	1	R
		---*---		
		A---SERIAL 18051184 THRU 18052384		
		B---SERIAL 18051184 THRU 18051250		
		C---SERIAL 18051251 THRU 18051312		
		D---SERIAL 18051184 THRU 18051445		
		E---SERIAL 18051446 THRU 18052384		
		F---SERIAL 18051184 THRU 18051486		
		G---SERIAL 18051487 THRU 18052384		
		H---SERIAL 18051184 THRU 18051496		
		J---SERIAL 18051497 THRU 18051774		
		K---SERIAL 18051446 THRU 18051653		
		L---SERIAL 18051654 THRU 18051771		
		M---SERIAL 18051772 THRU 18052384		
		N---SERIAL 18051775 THRU 18052384		
		P---SERIAL 18051446 THRU 18051761		
		Q---SERIAL 18051762 THRU 18052224		
		R---SERIAL 18051876 THRU 18052384		
		S---SERIAL 18051446 THRU 18051875		
		T---SERIAL 18051184 THRU 18051875		
		U---SERIAL 18051876 THRU 18052141		
		V---SERIAL 18052142 THRU 18052384		
		W---SERIAL 18052225 THRU 18052384		
		X---SERIAL 18051184 THRU 18051312		
		Y---SERIAL 18051313 THRU 18052384		

FIGURE AND INDEX NO.	PART NUMBER	DESCRIPTION 1 2 3 4 5 6 7	UNITS PER ASSY	USABLE ON CODE
76 -		ENGINE ASSEMBLY-CONTINENTAL	NP	A
- 1	IO-470-F	ENGINE-260 HP CM	1	G
	IO-520D	ENGINE-300 HP CM	1	F
		ATTACHING PARTS		
- 2	0750132-1	SHOCK MOUNT ASSEMBLY	4	
- 3		SPACER	NP	
- 4	0750137	STRAP-BONDING	4	
- 5	MS20253-5-100	PIN	4	
- 6	0851559-1	LOCK WASHER	4	
- 7	539911	NUT-BARREL CM	4	
- 8	AN7-33A	BOLT		
		---*---		
	SEE FIG 76A	ENGINE COMPONENTS AND ACCESSORIES	1	
- 9	0751003-30	MOUNT ASSEMBLY-ENGINE	1	
	0751003-31	MOUNT ASSEMBLY-ENGINE FLOATPLANE	1	
-10	0751006-2	LUG-ENGINE MOUNT	2	
		ATTACHING PARTS		
-11	AN6-21A	BOLT	1	
	AN960-616	WASHER	1	
	NAS679A6	NUT	1	
		---*---		
-12	0751005-1	WASHER	4	
-13	SEE FIG 82	STACK INSTALLATION-EXHAUST	NP	
-14	SEE FIG 78 & 78A	BOX INSTALLATION-AIR	NP	S
-15	SEE FIG 84	BAFFLES INSTALLATION-ENGINE	NP	
-16		VACUUM SYSTEM SEE FIG 116, 117A, 117D & 117E	NP	
		LARGE OIL COOLER INSTALLATION	NP	
-17	626189A	OIL COOLER-ENGINE CM	1	
-17A	537312	PLATE-OIL COOLER END CM	1	
	625303	GASKET CRANKCASE TO PLATE CM	1	
-17B	537282	GASKET OIL COOLER TO OIL COOLER PLATE CM	1	
-18	0700318-2	BAFFLE ASSEMBLY	1	
-18A	0700309-2	BAFFLE ASSEMBLY	1	
-18B	0750152-2	BAFFLE-OIL COOLER INBOARD	1	
-18C	S1021Z10-8	SCREW	2	
-18D	NAS446-5-3	NUT	2	
-19		GOVERNOR ASSEMBLY-PROPELLER SEE FIG 79, 79A, 80 81 & 81A-	1	G
		GOVERNOR ASSEMBLY-PROPELLER SEE FIG 81B, 81C & 81D	1	F
-20	0500106-338	TUBE-BREATHER AFT	1	B
	0700147-9	TUBE-BREATHER AFT	1	C
-21	0500106-164	TUBE-BREATHER FORWARD	1	B
	1200106-108	TUBE-BREATHER FWD	1	C
		ATTACHING PARTS		
-22	S51-12	HOSE-3.00 IN LG BKI REF S51-12-12	1	
-23	NAS397-18	CLAMP	4	
		---*---		
-24	0813601-4	BULB-CYLINDER HEAD TEMPERATURE	1	B
	0813601-6	BULB-CYLINDER HEAD TEMPERATURE ALTERNATE	1	B
	S1372-1	SENDING UNIT-CYLINDER HEAD TEMPERATURE	1	C
-25	AN4076-1	FITTING	1	
-26	AN742D14	CLAMP	2	
-27	0750178-1	CLAMP	1	S
	S1644-3	CLAMP	3	U
-28	MS21919DG2	CLAMP	1	
-29	S1053E12T	HOSE-15.00 IN.LG. BULK ITEM REF S-1053E12T-15.00	1	
-30	NAS397-28	CLAMP	2	
-31	S1053E12T	HOSE-30.00 IN.LG. BULK ITEM REF S-1053E12T-30.00	1	
		ATTACHING PARTS		
-32	NAS397-28	CLAMP	2	
-33	AN735D36	CLAMP	1	
	MS21919DG24	CLAMP	1	
	AN3-4A	BOLT	1	
	MS21044N3	NUT	1	
		---*---		
-34	0750140-6	BLAST TUBE-GENERATOR	1	B
		ATTACHING PARTS		
-35	NAS397-16	CLAMP	2	B
		---*---		

CONTINUED ON NEXT PAGE

Engine (cont)

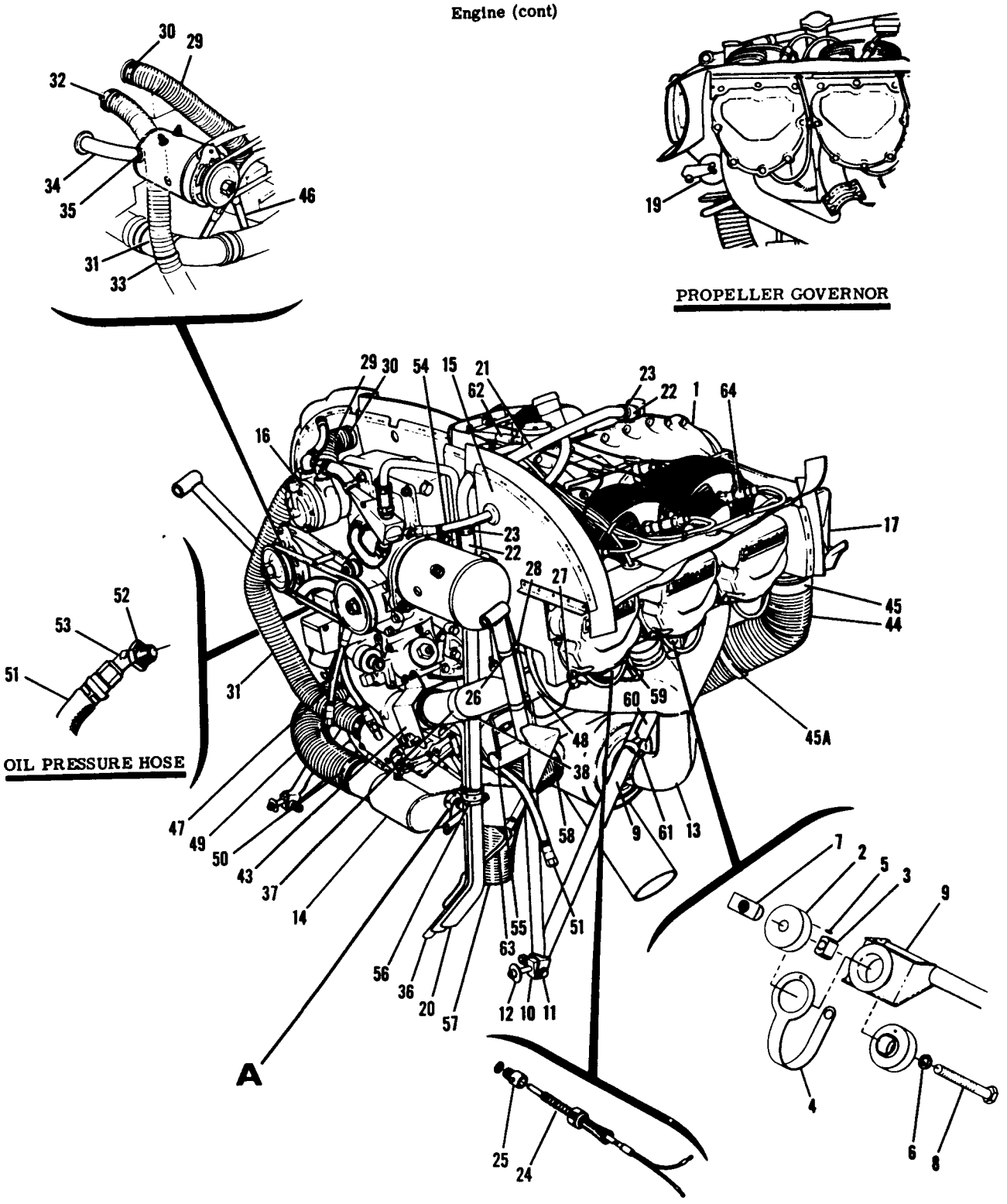

SERIAL 185-0968 THRU 18502310 (300 HP)
SERIAL 185-0001 THRU 185-1149 (260 HP)

Figure 76. (Sheet 1 of 2) Engine Assembly

Engine (cont)

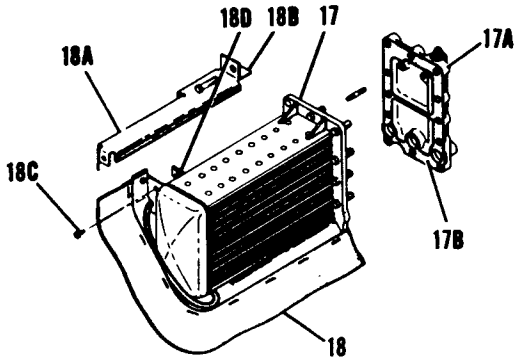

OIL COOLER

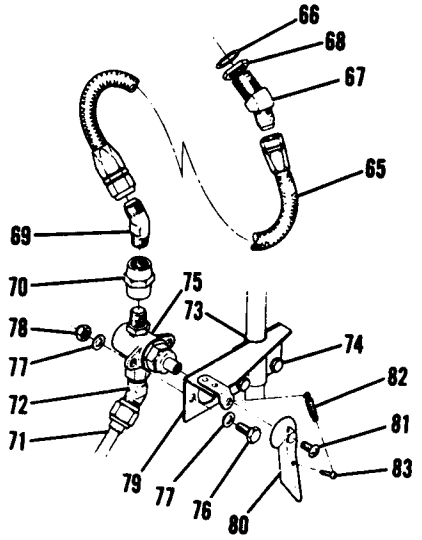

OIL SUMP DRAIN

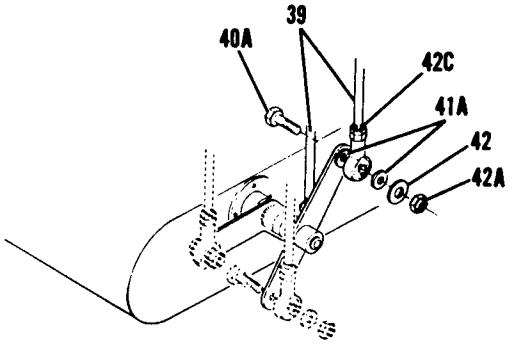

SERIAL 185-1480 THRU 18501832

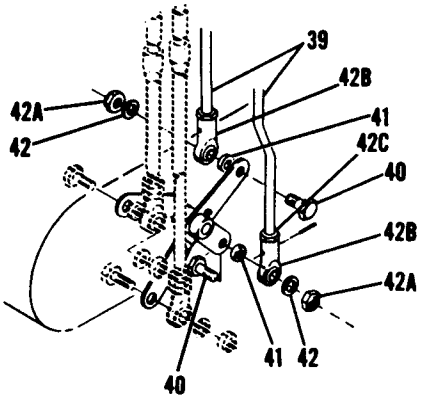

SERIAL 185-0001 THRU 185-1479

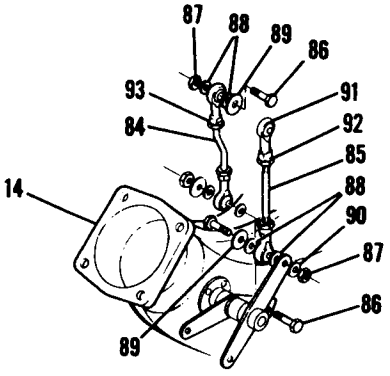

Detail **A**

SERIAL 18501833 THRU 18502007, 18502026, 18502027

SERIAL 185-0968 THRU 18502310 (300 HP)
SERIAL 185-0001 THRU 185-1149 (260 HP)

Figure 76. (Sheet 2 of 2) Engine Assembly

FIGURE AND INDEX NO.	PART NUMBER	DESCRIPTION 1 2 3 4 5 6 7	UNITS PER ASSY	USABLE ON CODE
76 -36	0500106-343	LINE ASSEMBLY-ENGINE PUMP DRAIN	1	
-37	AN742D36	CLAMP	1	
-38	AN742D12	CLAMP	1	
		ATTACHING PARTS		
	AN3-4A	BOLT	1	
	MS21044N3	NUT	1	
		---*---		
-39	0750169-6	ROD ASSEMBLY-THROTTLE & MIXTURE CONTROLS	2	Q
		ATTACHING PARTS		
	AN3-6A	BOLT UPPER END THROTTLE CONTROL ONLY	1	Q
	AN3-12A	BOLT UPPER END MIXTURE CONTROL ONLY	1	Q
	NAS43HT3-24	SPACER UPPER END MIXTURE CONTROL ONLY	1	Q
	AN960-10L	WASHER UPPER END ONLY	1	Q
	S1450-3-10-032	WASHER UPPER END ONLY	1	Q
	MS20364-1032C	NUT UPPER END ONLY	1	Q
	HF3	ROD END UPPER END ONLY	1	Q
	AN315-3R	NUT UPPER END ONLY	1	Q
-40	AN3-7A	BOLT	1	M
-40A	AN3-6A	BOLT	1	N
-41	0750171-4	SPACER	1	M
-41A	AN960PD10	WASHER	2	N
-42	S1450-3-10-032	WASHER	1	Q
-42A	MS21044N3	NUT	1	Q
		---*---		
-42B	S1104-3	ROD END	1	Q
	NAS561P2-5	ROLL PIN	1	Q
-42C	AN345-10	NUT	1	Q
-43	0750166-4	SUPPORT	1	
-44	S1053E24T	HOSE-20.00 IN.LG. BULK ITEM REF S1053E24T-20.00	1	
		ATTACHING PARTS		
-45	NAS398-50	CLAMP	2	
-45A	AN742D50	CLAMP	1	T
	AN742D36	CLAMP AROUND INTAKE MANIFOLD	1	T
	S1021Z10-8	SCREW	1	T
	NAS438-10	NUT	1	T
		---*---		
-46	S1167-6-0270	HOSE ASSEMBLY	1	
-47	S1236-4-0144	HOSE ASSEMBLY	1	H
	S1236C4-0134	HOSE ASSEMBLY	1	J
-48	0750121	DEFLECTOR-EXHAUST HEAT	6	
-49	S1053K24T	HOSE-19 IN LG BULK ITEM REF S1053K24T19.0	1	Q
		ATTACHING PARTS		
-50	NAS398-50	CLAMP	2	Q
		---*---		
-51	S1236-4-0440	HOSE ASSEMBLY-OIL PRESSURE	1	H
	S1236-4-0415	HOSE ASSEMBLY-OIL PRESSURE	1	J
		ATTACHING PARTS		
	0550100-9	BRACKET ATTACHES TO CRANKCASE	1	J
	MS21919DG7	CLAMP	1	J
	S1021Z10-10	SCREW	1	J
	S1487-4	NUT	1	J
		---*---		
-52	AN912-3	BUSHING	1	
-53	0752037-1	ELBOW-RESTRICTOR 45 DEGREE	1	
-54	S1236-3-0294	HOSE ASSEMBLY-FUEL PRESSURE	1	K
	0700147-16	LINE-FUEL PRESSURE WHEN EXHAUSTED USE 0700147-46	1	L
	0700147-46	LINE-FUEL PRESSURE	1	L
		ATTACHING PARTS		
	0756003-1	ELBOW-RESTRICTOR	1	K
	MS20822-2D	ELBOW	1	L
		---*---		
-55	MS21919DG12	CLAMP	1	H
	S1485D12U	CLAMP	1	H
	MS21919DG7	CLAMP	2	J
	S1485D16U	CLAMP	2	J
		ATTACHING PARTS		
	S1021Z10-10	SCREW	1	
		---*---		
-56	S1590-4A	HARNESS BAND UC	1	

CONTINUED ON NEXT PAGE

FIGURE AND INDEX NO.	PART NUMBER	DESCRIPTION 1 2 3 4 5 6 7	UNITS PER ASSY	USABLE ON CODE
76 -57	S1053K24T	HOSE-26.0 IN LG BKI REF S1053K24T26.00	1	
-58	NAS398-50	CLAMP	2	
-59	MS21919DG4	CLAMP	12	
-60	0750141-1	DEFLECTOR-EXHAUST HEAT	2	D
	0750283-1	DEFLECTOR-EXHAUST HEAT	2	E
		ATTACHING PARTS		
-61	S1485D16L	CLAMP	2	
	S1485D20L	CLAMP	2	
	S1021Z10-10	SCREW	2	
		---*---		
	0750204-1	DIP STICK-ENGINE OIL	1	B
	0750222-2	DIP STICK-ENGINE OIL	1	C
-62	MS21919DG8	CLAMP	1	
	AN515-8R8	SCREW	1	
	AN960-8L	WASHER	1	
	NAS679A08	NUT	1	
-63	0750179-5	TUBE-AIR BOX DRAIN	1	Q
	1600010-117	TUBE-AIR BOX DRAIN	1	R
		ATTACHING PARTS		
	S1495-6	HOSE 1.5 IN LG BULK ITEM REF S1495-6-1.50	1	
	NAS397-10	CLAMP	2	
		---*---		
	SEE FIG 77A	OIL COOLER INSTALLATION-NON CONGEALING	1	
	SEE FIG 121	ALTERNATOR INSTALLATION	1	
-64	SL300A-C	SPARK PLUG SHIELDED SYSTEM 3/4-20 THREADS	12	
		DRAIN INSTALLATION-OIL SUMP	NP	P
-65	S1236-6-0130	HOSE ASSEMBLY	1	
		ATTACHING PARTS		
-66	AN900-10	GASKET	1	
-67	1650010-1	FITTING	1	
-68	1650010-2	JAMB NUT	1	
-69	MS20823-6D	ELBOW	1	
-70	AN910-2D	COUPLING	1	
		---*---		
-71	1600010-47	LINE ASSEMBLY	1	
		ATTACHING PARTS		
-72	MS20823-6D	ELBOW	1	
		---*---		
-73	1656003-5	CLAMP	1	
		ATTACHING PARTS		
-74	AN3-4A	BOLT	4	
	AN960PD10L	WASHER	8	
	MS20364-1032C	NUT	4	
		---*---		
-75	1656006-1	VALVE ASSEMBLY	1	
-76	AN4-4A	BOLT	2	
-77	AN960PD416	WASHER	4	
-78	NAS679A4	NUT	2	
	0411803-7	VALVE	1	
-79	1656003-1	SUPPORT BRACKET ASSEMBLY-DRAIN VALVE	1	
-80	1656005-1	HANDLE	1	
		ATTACHING PARTS		
-81	39014	SCREW IB	1	
		---*---		
-82	0411265-1	SPRING	1	
		ATTACHING PARTS		
-83	AN515-6R8	SCREW	1	
		---*---		

CONTINUED ON NEXT PAGE

FIGURE AND INDEX NO.	PART NUMBER	DESCRIPTION 1 2 3 4 5 6 7	UNITS PER ASSY	USABLE ON CODE
76 -84	1650016-1	ROD ASSEMBLY-THROTTLE	1	R
-85	1650017-1	ROD ASSEMBLY-MIXTURE	1	R
		ATTACHING PARTS		
-86	AN3-6A	BOLT	2	R
-87	MS21044N3	NUT	2	R
-88	AN960PD10	WASHER	4	R
-89	S1450-3-10-32	WASHER	2	R
-90	AN960PD10L	WASHER LOWER MIXTURE ROD ATTACH	1	R
		---*---		
-91	S1104-3	ROD END	2	R
-92	AN315-4R	NUT	2	R
-93	AN315-3R	NUT	2	R
		A---SERIAL 185-0001 THRU 185-1149 260 HP		
		SERIAL 185-0968 THRU 18502310 300 HP		
		B---SERIAL 185-0001 THRU 185-0776		
		C---SERIAL 185-0777 THRU 18502310		
		D---SERIAL 185-0001 THRU 185-0771		
		E---SERIAL 185-0001 THRU 185-0654		
		F---SERIAL 185-0968 THRU 18502310 300 HP		
		G---SERIAL 185-0001 THRU 185-1149 260 HP		
		H---SERIAL 185-0001 THRU 185-1388		
		J---SERIAL 185-1389 THRU 18502310		
		K---SERIAL 185-0001 THRU 185-0653		
		L---SERIAL 185-0654 THRU 18502310		
		M---SERIAL 185-0001 THRU 185-1479		
		N---SERIAL 185-1480 THRU 18501832		
		P---SERIAL 18501600 THRU 18502310		
		Q---SERIAL 185-0001 THRU 18501832		
		R---SERIAL 18501833 THRU 18502007, 18502026, 18502027		
		S---SERIAL 185-0001 THRU 18502007, 18502026, 18502027		
		T---SERIAL 18502091 THRU 18502310		
		U---SERIAL 18502008 THRU 18502025, 18502028 THRU 18502310		

FIGURE AND INDEX NO.	PART NUMBER	DESCRIPTION 1 2 3 4 5 6 7	UNITS PER ASSY	USABLE ON CODE
76A-	*	ENGINE COMPONENTS & ASSOCIATED ACCESSORIES MODEL 185 ------	NP	A
- 1	628472	MAGNETO LH CM SCINTILLA S6RN201 ----------	1	J
	628473	MAGNETO RH CM SCINTILLA S6RN205 ----------	1	J
	625765	MAGNETO CM SLICK MODEL 662 ----------	2	K
- 2	534750	GASKET-MAGNETO TO CRANKCASE CM ----------	2	
- 3	629076	MAGNETO DRIVE GEAR CM ----------	2	B
	629422	MAGNETO DRIVE GEAR CM ----------	2	C
- 4	630948	IGNITION HARNESS-BENDIX LIGHT WEIGHT CM ----------	1	J
	633311	IGNITION HARNESS-SLICK MAGNETO CM ----------	1	K
- 5	626189A	OIL COOLER CM ----------	1	
- 6	537282	GASKET-COOLER TO PLATE CM ----------	1	
- 7	625303	GASKET-CRANKCASE TO PLATE CM ----------	1	
- 8	SEE FIG 77A	NON CONGEALING OIL COOLER ----------	1	
- 9	0750140-5	GENERATOR 627272 CM, DELCO 1101912, 110185 OR 1101909 ---	1	D
-10	539547	GENERATOR DRIVE BELT CM ----------	1	D
-11		ALTERNATOR-52 AMP 14 VOLT REFER TO SERVICE LETTER 66-1 --	1	E
	C611501-0102	ALTERNATOR-60 AMP 14 VOLT SEE FIGURES 121 & 123B --------	1	F
-12	0413205-11	VOLTAGE REGULATOR-USED WITH 50 AMP GENERATOR ----------	1	D
	0750216-1	VOLTAGE REGULATOR-USED WITH 52 AMP ALTERNATOR WHEN ------	1	G
		EXHAUSTED USE C611001-0102		
	C611001-0102	VOLTAGE REGULATOR-USED WITH 60 AMP ALTERNATOR ----------	1	H
-13	S1597-1-31.2	ALTERNATOR DRIVE BELT ----------	1	E
	S1597-1-30.8	ALTERNATOR DRIVE BELT ----------	1	F
-14	538076	BEVEL GEAR-GOVERNOR DRIVE CM ----------	1	
-15	629176	STARTER-12 VOLT HEAVY DUTY CM DELCO 1108249 ---------	1	
-16	MS9021-038	O RING-STARTER TO ENGINE ----------	1	
-17	SL300A-C	SPARK PLUG-SHIELDED SYSTEM 3/4-20 ----------	12	
-18	0750038-4	INDUCTION AIR FILTER ----------	1	
-19	0750038-3	FILTER GASKET LANDPLANES ----------	1	
	0750146-4	FILTER GASKET FLOATPLANES ----------	1	
-20	0750175-1	GASKET-INDUCTION AIR TO ENGINE ----------	1	M
-21	639761A1	AIR THROTTLE ASSY CM ----------	1	M
	639596	AIR THROTTLE ASSY CM ----------	1	N
-22	625219-2A6	METERING UNIT CM ----------	1	B
	625219-2A13	METERING UNIT CM ----------	1	L
	639717-2A1	METERING UNIT CM ----------	1	N
-23	626062-3A5	FUEL PUMP CM ----------	1	B
	638154-1A6	FUEL PUMP CM ----------	1	C
-24	631427A3	MANIFOLD VALVE CM ADD P OR M TO P/N-USE ----------	1	B
		MARKING STAMPED ON EXISTING PART		
	631351A6	MANIFOLD VALVE CM ADD P OR M TO P/N-USE ----------	1	C
		MARKING STAMPED ON EXISTING PART		
-25	627335D12	NOZZLE CM ADD B, C OR D TO P/N-HIGHER LETTER --------	AR	B
		DESIGNATES GREATER FLOW		
	627335D13	NOZZLE CM ADD B OR C TO P/N-HIGHER LETTER ----------	AR	C
		DESIGNATES GREATER FLOW		
-26		GOVERNOR SEE FIGURES 79, 79A, 80 81A, ----------	1	
		81B, 81C & 81D FOR APPLICABILITY		

NOTE. *THIS LISTING IS COMPILED TO PROVIDE PART NUMBERS OF COMMONLY USED ENGINE COMPONENTS AND ASSOCIATED ACCESSORIES. RELATIONSHIP OF THESE PARTS TO ENGINE OR AIRCRAFT ASSEMBLIES IS NOT INDICATED BY INDENTION. THIS FIGURE IS NOT ILLUSTRATED. INDEX NUMBERS ARE PROVIDED FOR LOCATION OF LINE ON WHICH PART NUMBER APPEARS.

A---SERIAL 185-0001 THRU 18502310
B---SERIAL 185-0001 THRU 185-1149 260 HP
C---SERIAL 185-0968 THRU 18502310 300 HP
D---SERIAL 185-0001 THRU 185-0776
E---SERIAL 185-0777 THRU 185-0967
F---SERIAL 185-0968 THRU 18502310
G---SERIAL 185-0777 THRU 185-1066
H---SERIAL 185-1067 THRU 18502310
J---SERIAL 185-0001 THRU 185-0512
K---SERIAL 185-0513 THRU 18502310
L---SERIAL 185-0968 THRU 18502007, 18502026, 18502027 300 HP
M---SERIAL 185-0001 THRU 18502007, 18502026, 18502027
N---SERIAL 18502008 THRU 18502025, 18502028 THRU 18502310

Engine (Cont)

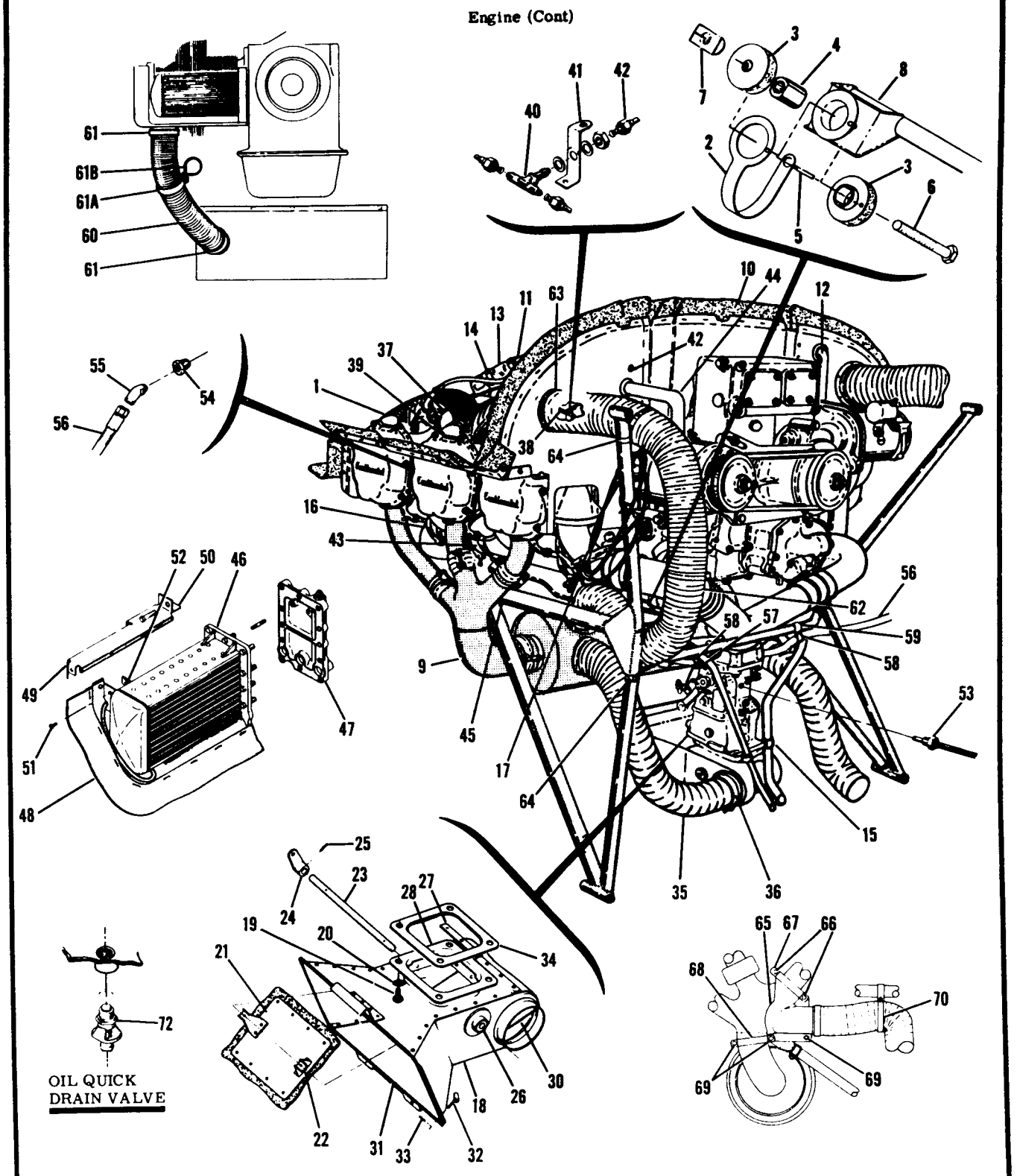

SERIAL 18051184 THRU 18052384

Figure 77. Engine Assembly

FIGURE AND INDEX NO.	PART NUMBER	DESCRIPTION 1 2 3 4 5 6 7	UNITS PER ASSY	USABLE ON CODE
77 -		ENGINE ASSEMBLY-CONTINENTAL	NP	A
- 1	O-470-R	ENGINE CM	1	
		ATTACHING PARTS		
- 2	0750137	BONDING STRAP-ENGINE MOUNT	4	
- 3	0750132-1	SHOCK MOUNT ASSEMBLY-ENGINE	4	
- 4	0750132-2	SPACER-BONDED	NP	
- 5	MS20253-5-100 **	PIN	4	
	MS20253-5-112 #	PIN FLOATPLANE & AMPHIBIAN ONLY	4	
- 6	AN7-33A	BOLT	4	
- 7	627773	NUT-BARREL CM	4	
	AN960-716L	WASHER	4	
		---*---		
	SEE FIG 77B	ENGINE COMPONENTS AND ACCESSORIES	1	
- 8	0751001-13	MOUNT-ENGINE	1	
	0751001-27	MOUNT-ENGINE FLOATPLANE & AMPHIBIAN ONLY	1	
- 9	SEE FIG 83	STACK INSTALLATION-EXHAUST	1	
		VACUUM SYSTEM SEE FIG 117, 117A, 117D & 117E	1	
-10	SEE FIG 85	BAFFLE INSTALLATION-ENGINE	1	
-11	0500106-164	TUBE-BREATHER LINE FORWARD	1	F
	1200106-108	TUBE-BREATHER LINE FORWARD	1	G
-12	0500106-250	TUBE-BREATHER LINE REAR	1	F
	0700147-8	TUBE-BREATHER LINE REAR	1	G
		ATTACHING PARTS		
-13	S51-12	HOSE-3.00 IN LG BKI REF S51-12-12	2	
-14	NAS397-18-1	CLAMP	4	
-15	0750158-1	STRAP	1	
	S1485D12U	CLAMP	1	
	S1021Z10-10	SCREW	1	
		---*---		
-16		GOVERNOR-PROPELLER SEE FIGURES 79, 79A, 81 & 81A	1	
-17	0311018-11	THERMOCOUPLE-CYLINDER HEAD TEMPERATURE	1	H
		ATTACHING PARTS		
	AN515B6-5	SCREW	2	
	AN936A6B	WASHER	2	
		---*---		
	S1372-1	SENDING UNIT-CYLINDER HEAD TEMPERATURE	1	J
-18	0750144-1	AIR BOX ASSEMBLY-CARBURETOR WEU 0750144-15	1	D
	0750144-15	AIR BOX ASSEMBLY-CARBURETOR WEU 0750144-16	1	E
	0750144-16	AIR BOX ASSEMBLY-CARBURETOR WEU 0750144-21	1	K
	0750144-21	AIR BOX ASSEMBLY-CARBURETOR	1	L
		ATTACHING PARTS		
-19	MS20074-04-3	BOLT	4	
-20	0750131-1	WASHER	4	
		---*---		
-21	0750133-7	VALVE ASSEMBLY	1	
-22	0750133-9	BRACKET	2	
-23	0750133-8	SHAFT-VALVE	1	
	0750133-21	SHAFT-VALVE ALT	1	
-24	0750111-19	ARM ASSEMBLY	1	
-25	MS16562-16	ROLL PIN	1	
-26	0750113-1	HOUSING ASSEMBLY	2	
-27	0750156-1	STRAP	1	
-28	0750126-4	COLLAR	1	
-29		DELETED, NEVER USED		
-30	0750133-22	DUST BAFFLE	1	
-31	0750144-6	SEAL	1	D
	0750144-20	SEAL	1	
-32	W98293-3-.320	STUD ALIC	2	
-33	S1853-4	PIN	2	
	AN960-10L	WASHER	2	
-34	0750142-1	GASKET-CARBURETOR AIR BOX	1	
-35	S1053K20T	HOSE-CARBURETOR HEAT 17.5 IN. LG. BULK ITEM	1	B
		REF S-1053K20T17.50		
	S1053K20T	HOSE-CARBURETOR HEAT 30 IN LG BULK ITEM	1	C
		REF S1053K20T30.00		
		ATTACHING PARTS		
-36	NAS398-42	CLAMP	2	
		---*---		

CONTINUED ON NEXT PAGE

FIGURE AND INDEX NO.	PART NUMBER	DESCRIPTION 1 2 3 4 5 6 7	UNITS PER ASSY	USABLE ON CODE
77 -37	0500106-196	PRIMER LINE-CYLINDER #6 TO TEE	1	B
-38	0500106-197	PRIMER LINE-CYLINDER #4 TO TEE	1	B
		ATTACHING PARTS		
-39	AN4022-1	NIPPLE	2	B
-40	AN834-2D	TEE	1	B
	AN924-2D	NUT	1	B
	AN960D516	WASHER	2	B
-41	0750150-1	BRACKET-PRIMER LINE	2	B
		---*---		
	MS21919DG8	CLAMP-IGNITION HARNESS FORWARD	1	
	MS21919DG10	CLAMP-IGNITION HARNESS REAR	1	
		ATTACHING PARTS		
	S1021Z10-8	SCREW	1	
	NAS446-5-3	NUT	1	
		---*---		
-42	0500106-170	PRIMER LINE-TEE TO BAFFLE	1	B
-43	0750121	DEFLECTOR ASSEMBLY	6	
	SEE FIG 118	FUEL PRIMER SIX LINE SYSTEM INSTALLATION	1	
-44	0750140-6	BLAST TUBE-GENERATOR	1	H
		ATTACHING PARTS		
	NAS397-16-1	CLAMP	1	
		---*---		
-45	0750283-1	DEFLECTOR-EXHAUST HEAT	2	D
		ATTACHING PARTS		
	S1485D14L	CLAMP	2	D
	S1021Z10-10	SCREW	2	D
		---*---		
	0750141-1	DEFLECTOR-EXHAUST HEAT	2	C
		ATTACHING PARTS		
	S1021Z10-10	SCREW	2	C
	S1485D20L	CLAMP	2	C
		---*---		
	0750160-1	DIP STICK	1	B
	0750211-1	DIP STICK	1	C
		LARGE OIL COOLER INSTALLATION	NP	B
-46	626189A	OIL COOLER-ENGINE CM	1	B
-47	537312	PLATE-OIL COOLER END CM	1	B
	625303	GASKET CRANCASE TO PLATE CM	1	B
	537282	GASKET OIL COOLER TO OIL COOLER PLATE CM	1	B
-48	0700318-2	BAFFLE ASSEMBLY	1	B
-49	0700309-2	BAFFLE ASSEMBLY	1	B
-50	0750152-2	BAFFLE-OIL COOLER INBOARD	1	B
-51	S1021Z10-8	SCREW	2	B
-52	NAS446-5-3	NUT	2	B
-53	0550209-1	PROBE-CARBURETOR AIR TEMP	1	
-54	AN912-3	BUSHING	1	
-55	0752037-1	ELBOW	1	
-56	S1167-4-0388	HOSE-OIL PRESSURE	1	
		ATTACHING PARTS		
-57	0752038-1	BRACKET	1	
-58	MS21919DG9	CLAMP	2	
-59	S1485D12U	CLAMP	1	
	S1021Z10-10	SCREW	2	
	NAS446-4-3	NUT	1	
		---*---		
-60	S1053K24T	HOSE-AIR INTAKE 20 IN LG BK1 REF S1053K24T20.0 --	1	
		ATTACHING PARTS		
-61	NAS398-50	CLAMP	2	
-61A	AN742D50	CLAMP	1	N
-61B	AN742D36	CLAMP	1	N
	S1021Z10-8	SCREW	1	N
	NAS488-10	NUT	1	N
		---*---		

CONTINUED ON NEXT PAGE

FIGURE AND INDEX NO.	PART NUMBER	DESCRIPTION 1 2 3 4 5 6 7	UNITS PER ASSY	USABLE ON CODE
77 -62	S1053K20T	HOSE-AIR INTAKE 50 IN LG BK1 REF S1053K20T50.0 --	1	
		ATTACHING PARTS	2	
-63	NAS398-42	CLAMP	2	
-64	TA732D42	CLAMP THAS	1	
	S1485D14L	CLAMP	1	
	S1485D16U	CLAMP	2	
	S1021Z10-12	SCREW		
		---*---	1	C
-65	0750607-4	SHROUD ASSEMBLY-OUTBOARD	1	C
	0750607-5	SHROUD ASSEMBLY-INBOARD		
		ATTACHING PARTS	2	C
-66	AN3-5A	BOLT	2	C
-67	0750225-1	CLAMP	2	C
-68	0750225-2	CLAMP	3	C
-69	AN3-4A	BOLT	5	C
	MS21044N3	NUT		
		---*---	1	C
-70	MS21919DG40	CLAMP	1	C
	S1485D14U	CLAMP		
		ATTACHING PARTS	1	
	S1021Z10-8	SCREW		
		---*---	1	J
	SEE FIG 122	ALTERNATOR INSTALLATION	12	
-71	SEE FIG 778	SPARK PLUG	1	
-72	S1964-3	OIL VALVE ASSEMBLY-QUICK DRAIN		

NOTE. **WHEN REPLACING THIS ITEM FOR FLOATPLANES & AMPHIBIANS ORDER PART MARKED *.

A---SERIAL 18051184 THRU 18052384
B---SERIAL 18051184 THRU 18051312
C---SERIAL 18051313 THRU 18052384
D---SERIAL 18051184 THRU 18051336
E---SERIAL 18051337 THRU 18051567
F---SERIAL 18051184 THRU 18051447
G---SERIAL 18051448 THRU 18052384
H---SERIAL 18051184 THRU 18051445
J---SERIAL 18051446 THRU 18052384
K---SERIAL 18051568 THRU 18051755
L---SERIAL 18051756 THRU 18052384
M---SERIAL 18052104 THRU 18052384
N---SERIAL 18052285 THRU 18052384

Engine (Cont)

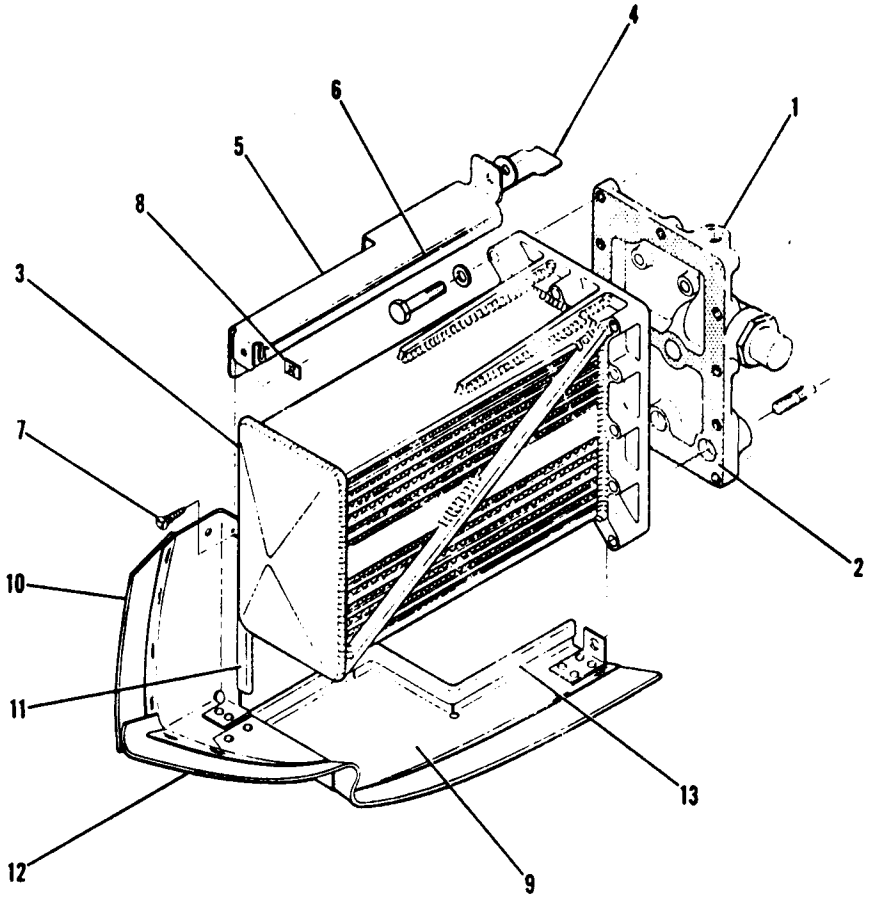

SERIAL 18051184 THRU 18052384
SERIAL 185-0513 THRU 18502310

Figure 77A. Non Congealing Oil Cooler Installation

FIGURE AND INDEX NO.	PART NUMBER	DESCRIPTION 1 2 3 4 5 6 7	UNITS PER ASSY	USABLE ON CODE
77A-		OIL COOLER INSTALLATION-NON CONGEALING	NP	A
- 1	626332	PLATE-OIL COOLER CM	1	
- 2	626342	GASKET-OIL COOLER TO PLATE CM	1	
	626341	GASKET-PLATE TO CRANKCASE CM	1	
- 3	639151	COOLER-ENGINE OIL 9 IN CM	1	B
	639171	COOLER-ENGINE OIL 8 IN CM	1	E
	625966	GASKET-PLUG	1	
- 4	0750152-3	BAFFLE	1	
- 5	0700123-4	BAFFLE	1	B
	0700123-7	BAFFLE	1	C
	0755002-2	BAFFLE	1	D
- 6	S202RB	MOULDING-8.50 IN LG BKI REF S202R0850B	1	B
	S202RB	MOULDING-7.50 IN LG BKI REF S202R0750B	1	C
	S202RB	MOULDING-5.80 IN LG BKI REF S202R0580B	1	D
- 7	S1021Z6-6	SCREW	2	
- 8	NAS446-2-3	NUT	2	
- 9	0700123-2	BAFFLE ASSEMBLY	1	B
	0700123-9	BAFFLE ASSEMBLY	1	C
	0700123-14	BAFFLE ASSEMBLY	1	D
-10	0700318-7	SEAL	1	
-11	S202RB	MOULDING-5.00 IN LG BULK ITEM REF S202R0500B	1	
-12	0700318-8	SEAL	1	
-13	S202RB	MOULDING-11.50 IN LG BULK ITEM REF S202R1150B	1	
		A---SERIAL 18051184 THRU 18052384 SERIAL 185-0513 THRU 18502310 B---SERIAL 18051184 THRU 18052187 SERIAL 185-0513 THRU 18501860 C---SERIAL 18052188 THRU 18052210 SERIAL 18501860 THRU 18501894 & 18501896 THRU 18501910, 18501912, 18501913, 18501915, 18501917 THRU 18501921, 18501923 THRU 18501926 D---SERIAL 18052211 THRU 18052384 SERIAL 18501895, 18501911, 18501914, 18501916, 18501922, 18501927 THRU 18502310 E---SERIAL 18052188 THRU 18052384 SERIAL 18501861 THRU 18502310		

FIGURE AND INDEX NO.	PART NUMBER	DESCRIPTION 1 2 3 4 5 6 7	UNITS PER ASSY	USABLE ON CODE
77B-	*	ENGINE COMPONENTS & ASSOCIATED ACCESSORIES MODEL 180 ------	NP	A
- 1	631237	MAGNETO CM SCINTILLA S6RN25 ----------	2	B
	625765	MAGNETO CM SLICK ----------	2	C
- 2	534750	GASKET-MAGNETO TO CRANKCASE CM ----------	2	
- 3	629076	MAGNETO DRIVE GEAR CM ----------	1	
- 4	633005	IGNITION HARNESS-BENDIX LIGHT WEIGHT COMPLETE ASSEMBLY CM-	1	B
	633006	IGNITION HARNESS-RH BENDIX LIGHT WEIGHT CM ----------	1	B
	633007	IGNITION HARNESS-LH BENDIX LIGHT WEIGHT CM ----------	1	B
- 5	633311	IGNITION HARNESS COMPLETE CM SLICK ----------	1	C
- 6	627392	OIL COOLER CM ----------	1	
- 7	625017	GASKET-COOLER TO PLATE CM ----------	1	
- 8	625303	GASKET-CRANKCASE TO PLATE CM ----------	1	
- 9	SEE FIG 77A	NON CONGEALING OIL COOLER ----------	1	
-10	0750140-5	GENERATOR 627272 CM DELCO 1101912, 1101895 OR 1101909 -	1	D
-11	539547	GENERATOR DRIVE BELT CM ----------	1	D
-12		ALTERNATOR-52 AMP 14 VOLT REFER TO SERVICE LETTER 66-1 --	1	E
	C611501-0102	ALTERNATOR-60 AMP 14 VOLT SEE FIGURES 122 & 123B --------	1	F
-13	0413205-11	VOLTAGE REGULATOR-USED WITH 50 AMP GENERATOR ----------	1	D
	0750216-1	VOLTAGE REGULATOR-USED WITH 52 AMP ALTERNATOR WHEN ------ EXHAUSTED USE C611001-0102	1	E
	C611001-0102	VOLTAGE REGULATOR-USED WITH 60 AMP ALTERNATOR ----------	1	F
-14	S1597-1-31.2	ALTERNATOR DRIVE BELT ----------	1	E
	S1597-1-30.8	ALTERNATOR DRIVE BELT ----------	1	F
-15	538076	BEVEL GEAR-GOVERNOR DRIVE CM ----------	1	
-16	629176	STARTER-12 VOLT HEAVY DUTY CM DELCO 1108249 ---------	1	
-17	MS9021-038	O RING-STARTER TO ENGINE ----------	1	
-18	0750142-1	GASKET-CARBURETOR AIR BOX TO CARBURETOR ----------	1	
-19	633027	CARBURETOR CM MARVEL SCHEBLER TYPE MA4-5, P/N 10-4893 ---	1	
-20	35985	GASKET-CARBURETOR TO ENGINE CM ----------	1	
-21	0750038-4	AIR FILTER-CARBURETOR LANDPLANES OR FLOATPLANES ---------	1	
	121553	AIR FILTER-CARBURETOR OIL DIPPED FLOATPLANE ---------	1	
-22	0750038-3	GASKET-AIR FILTER LANDPLANES ----------	1	
	0750146-4	GASKET-AIR FILTER FLOATPLANES ----------	1	
-23	SH15C #	SPARK PLUG FOR USE IN SHIELDED SYSTEMS ---------- WITH 5-8-24-3A THREADS	12	
	SH20A #	SPARK PLUG FOR USE IN SHIELDED SYSTEMS ---------- WITH 5-8-24-3A THREADS	12	
	SH200A-C #	SPARK PLUG FOR USE IN SHIELDED SYSTEMS ---------- WITH 3-4-20-3A THREADS	12	
-24		GOVERNOR SEE FIGURES 79, 79A, 81 & 81A FOR APPLICABILITY-	1	

NOTE. *THIS LISTING IS COMPILED TO PROVIDE PART NUMBERS OF COMMONLY USED ENGINE COMPONENTS AND ASSOCIATED ACCESSORIES. RELATIONSHIP OF THESE PARTS TO ENGINE OR AIRCRAFT ASSEMBLIES IS NOT INDICATED BY INDENTION. THIS FIGURE IS NOT ILLUSTRATED. INDEX NUMBERS ARE PROVIDED FOR LOCATION OF LINE ON WHICH PART NUMBER APPEARS.

NOTE. #SPARK PLUGS ARE LISTED IN ORDER OF HEAT RANGE, PROGRESSIVELY COLDER FROM TOP LISTING TO BOTTOM.

A---SERIAL 18051184 THRU 18052384
B---SERIAL 18051184 THRU 18051774
C---SERIAL 18051775 THRU 18052384
D---SERIAL 18051184 THRU 18051445
E---SERIAL 18051446 THRU 18051607
F---SERIAL 18051608 THRU 18052384

Engine (Cont)

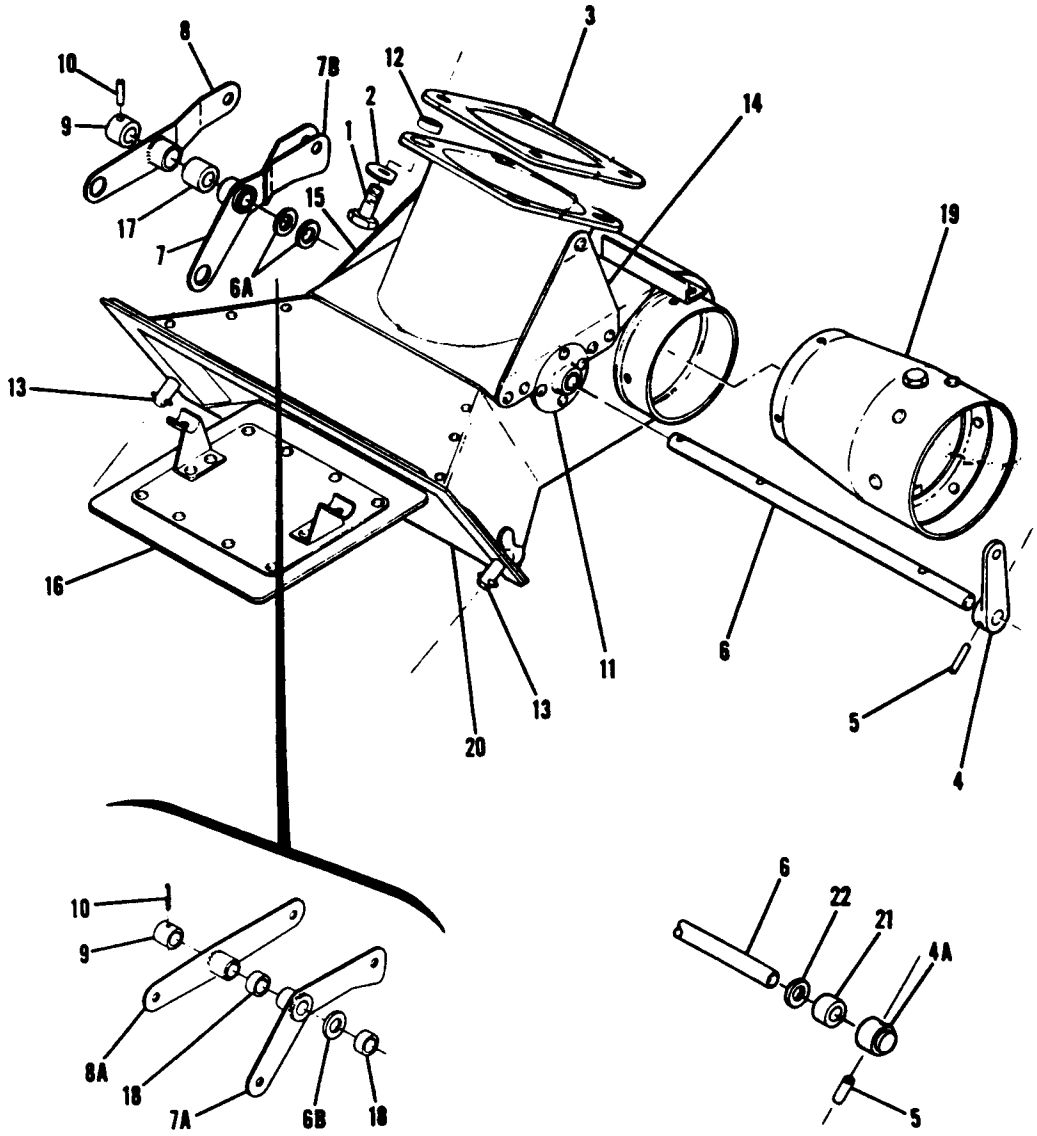

SERIAL 185-1480 THRU 18501832

SERIAL 185-1301 THRU 18501832

SERIAL 185-0001 THRU 18501832

Figure 78. Induction System Air Box Assembly

FIGURE AND INDEX NO.	PART NUMBER	DESCRIPTION 1 2 3 4 5 6 7	UNITS PER ASSY	USABLE ON CODE
78 -	0750162-6	AIR BOX ASSEMBLY-INDUCTION SYSTEM	1	A
	0750162-7	AIR BOX ASSEMBLY-INDUCTION SYSTEM	1	C
	0750162-9	AIR BOX ASSEMBLY-INDUCTION SYSTEM	1	G
	0750162-10	AIR BOX ASSEMBLY-INDUCTION SYSTEM	1	H
		ATTACHING PARTS		
- 1	MS20074-04-4	BOLT	4	
- 2	0750131-1	WASHER	4	
- 3	0750175-1	GASKET	1	
		---*---		
- 4	0750111-19	ARM ASSEMBLY	1	D
- 4A	0750111-21	BOSS-SHAFT	1	E
		ATTACHING PARTS		
- 5	MS16562-16	PIN-ROLL	1	
		---*---		
- 6	0750173-1	SHAFT-VALVE	1	D
	0750173-2	SHAFT-BELLCRANK	1	E
- 6A	AN960-516	WASHER	2	F
- 6B	AN960-516	WASHER	1	H
- 7	0750163-4	BELLCRANK ASSEMBLY-THROTTLE CONTROL	1	F
- 7A	0750182-4	BELLCRANK ASSEMBLY-THROTTLE CONTROL	1	H
- 7B	0750207-1	STRIKER-MICRO SWITCH	1	B
	0750207-2	BRACKET-MICRO SWITCH	1	B
	0750207-3	BRACKET-MICRO SWITCH	1	H
- 8	0750164-5	BELLCRANK ASSEMBLY-MIXTURE CONTROL	1	F
- 8A	0750181-1	BELLCRANK ASSEMBLY-MIXTURE CONTROL	1	H
- 9	0750171-5	SPACER	1	
		ATTACHING PARTS		
-10	MS1652-16	PIN-ROLL	1	
		---*---		
-11	0750113-1	HOUSING ASSEMBLY	2	
-12	0750167-1	BUSHING	4	
-13	[illegible]3-3-320	STUD ALIC	1	
	5185[illegible]	PIN	2	
	AN[illegible]0-10L	WASHER	2	
-14	0750162-3	BRACE LH	1	
-15	0750162-4	BRACE RH	1	
-16	0750133-7	VALVE	1	D
-17	0750171-1	SPACER	1	F
-18	0750180-1	SPACER	2	H
-19	0750174-3	INLET ASSEMBLY-ALTERNATE AIR	1	
-20	0750179-8	DRAIN ASSEMBLY	1	
-21	0750171-1	SPACER	1	E
-22	AN960-516	WASHER .063 THICK	AR	E
	AN960-516L	WASHER .032 THICK	AR	E
	NAS70CL328-563	WASHER .016 THICK	AR	E

A---SERIAL 185-0001 THRU 185-0512
B---SERIAL 185-0513 THRU 185-1479
C---SERIAL 185-0513 THRU 185-1300
D---SERIAL 185-0001 THRU 185-1300
E---SERIAL 185-1301 THRU 18501832
F---SERIAL 185-0001 THRU 185-1479
G---SERIAL 185-1301 THRU 185-1479
H---SERIAL 185-1480 THRU 18501832

Engine (Cont)

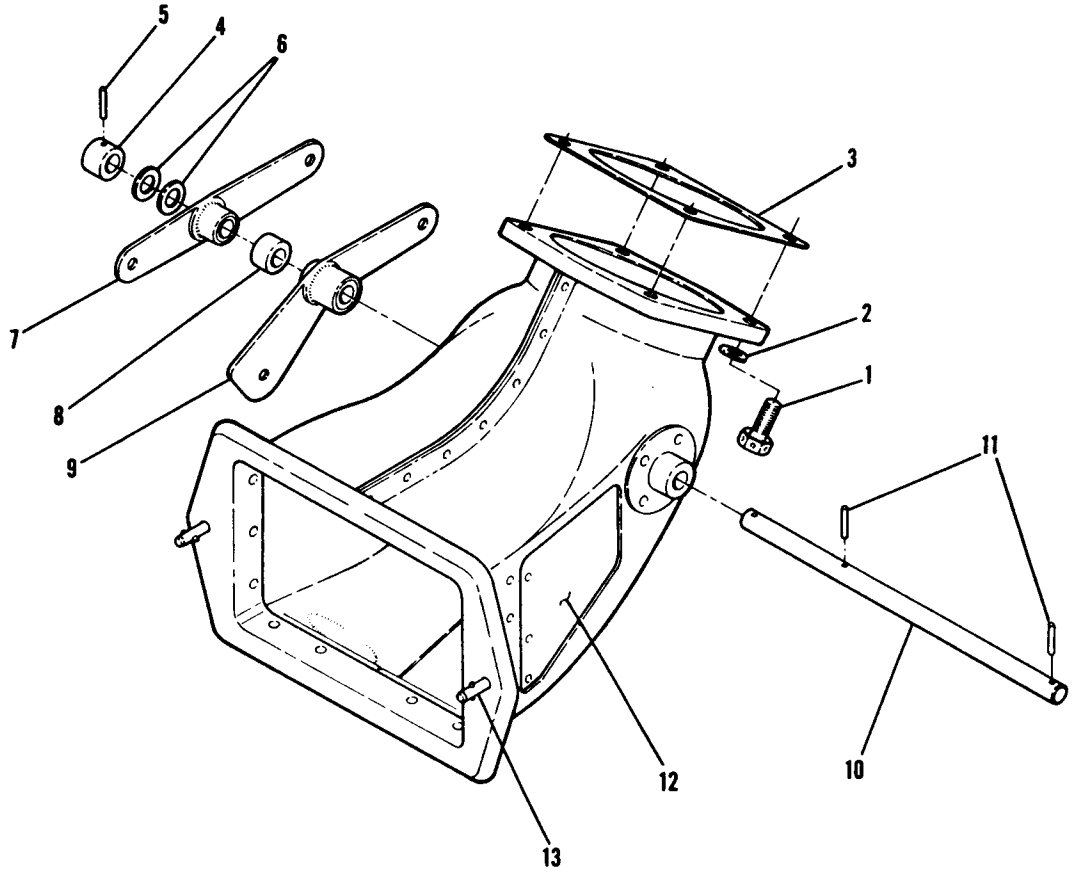

SERIAL 18501833 THRU 18502007, 18502026, 18502027

Figure 78A. Induction Air Box Assembly

FIGURE AND INDEX NO.	PART NUMBER	DESCRIPTION 1 2 3 4 5 6 7	UNITS PER ASSY	USABLE ON CODE
78A-	1650012-1	AIR BOX ASSEMBLY-INDUCTION	1	A
		ATTACHING PARTS		
- 1	MS20074-04-4	BOLT	4	
- 2	0750131-1	WASHER	4	
- 3	0750175-1	GASKET	1	
		---*---		
- 4	0750171-5	SPACER	1	
		ATTACHING PARTS		
- 5	MS16562-12	ROLL PIN	1	
		---*---		
- 6	NAS70CL328-563	WASHER .016 THICK	AR	
	AN960-516L	WASHER .032 THICK	AR	
- 7	0750181-1	BELLCRANK-MIXTURE	1	
- 8	0750171-1	SPACER	1	
- 9	1650015-1	BELLCRANK-THROTTLE	1	
-10	1650014-2	SHAFT	1	
		ATTACHING PARTS		
-11	NAS561P6-12	ROLL PIN	2	
		---*---		
-12	1650019-8	DOOR ASSEMBLY-ALTERNATE AIR	1	
		ATTACHING PARTS		
	1650020-1	SPACER	1	
		---*---		
-13	W98293-3-320	STUD	2	
	S1853-4	PIN	2	
	AN960-10L	WASHER	2	
		A---SERIAL 18501833 THRU 18502007, 18502026, 18502027		

Engine (cont)

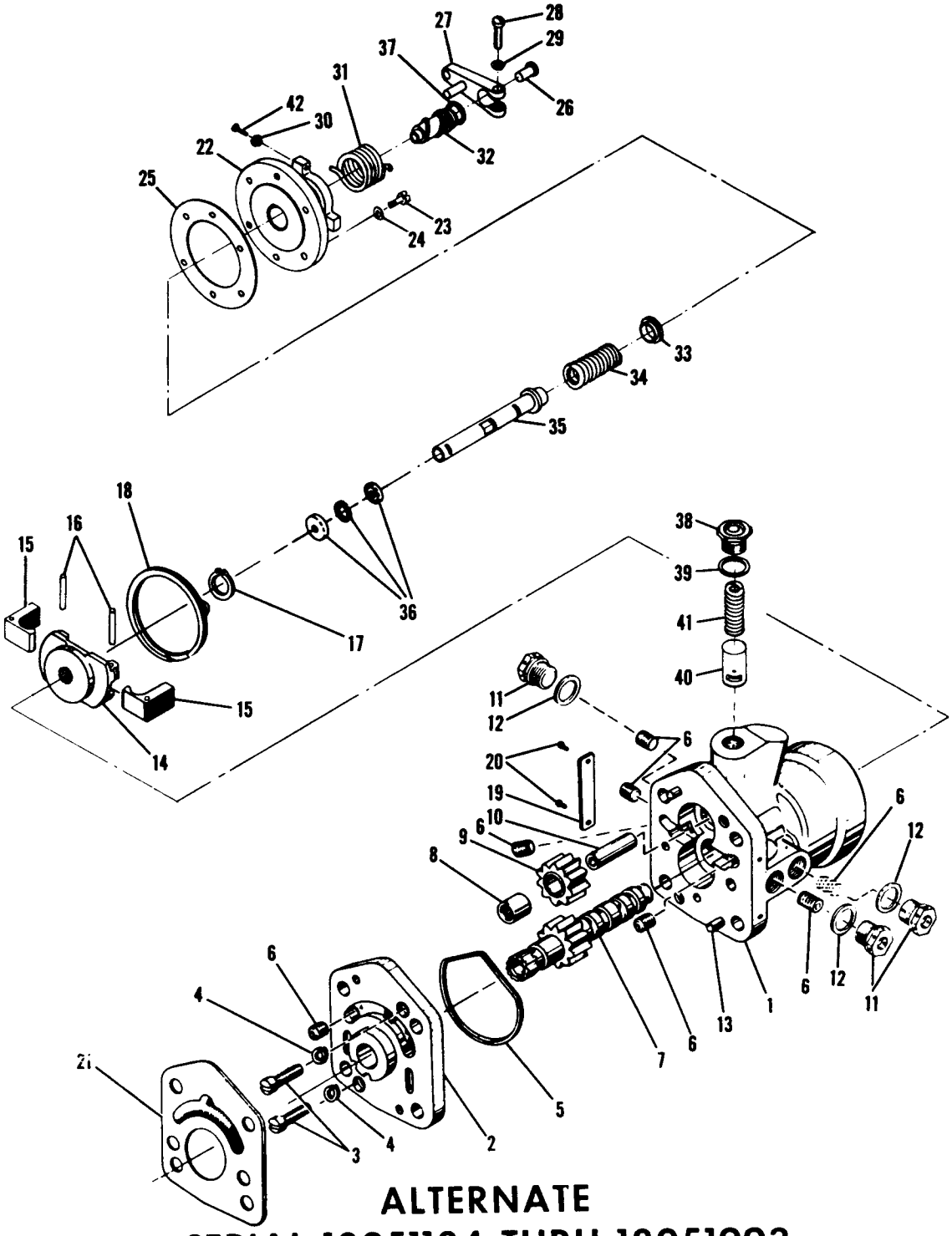

ALTERNATE
SERIAL 18051184 THRU 18051993
SERIAL 185-0001 THRU 185-1149 (260 HP)

Figure 79. Propeller Governor Assembly

FIGURE AND INDEX NO.	PART NUMBER	DESCRIPTION 1 2 3 4 5 6 7	UNITS PER ASSY	USABLE ON CODE
79 -	0750101-61	GOVERNOR ASSEMBLY-PROPELLER ALT ORDER C161040-0103 ----	NP	A
- 1	210253	BODY-GOVERNOR WGV ----------	1	
- 2	210259	BASE-GOVERNOR WGV ----------	1	
		ATTACHING PARTS		
- 3	218036	SCREW WGV ----------	2	
- 4	AN935-10	WASHER ----------	2	
- 5	206336	O RING WGV ----------	1	
		---*---		
- 6	190734	PLUG-PIPE WGV ----------	6	
- 7	210206	GEAR-PUMP DRIVE WGV ----------	1	
- 8	210036	BEARING-NEEDLE WGV ----------	1	
- 9	204864	GEAR-PUMP IDLER WGV ----------	1	
-10	210031	STUD-IDLER GEAR WGV ----------	1	
-11	210095	PLUG-SCREW THREAD WGV ----------	3	
-12	190733	WASHER WGV ----------	3	
-13	184793	PIN-DOWEL WGV ----------	2	
-14	210207	HEAD--FLY WEIGHT WGV ----------	1	
-15	210289	FLY WEIGHT WGV ----------	1	
-16	210112	PIN-FLY WEIGHT WGV ----------	2	
-17	190094	RING-RETAINING WGV ----------	1	
-18	192103	RING-SPIROLOX RETAINING WGV ----------	1	
-19	193385	NAMEPLATE WGV ----------	1	
		ATTACHING PARTS		
-20	AN535-0-2	SCREW ----------	2	
		---*---		
-21	MS100009	GASKET-MOUNTING ----------	1	
-22	210272	COVER-GOVERNOR WGV ----------	1	
		ATTACHING PARTS		
-23	AN503-8-10	SCREW ----------	4	
-24	AN935-8L	WASHER ----------	4	
-25	206337	GASKET-COVER WGV ----------	1	
		---*---		
-26	210293	PLUG-SPEED ADJUSTMENT WGV ----------	1	
-27	210039	LEVER ASSEMBLY-SPEED ADJUSTMENT WGV ----------	1	
-28	188434	SCREW WGV ----------	1	
-29	AN935-10	WASHER ----------	1	
-30	188302	NUT WGV ----------	1	
-31	191869	SPRING-LEVER CONTROL WGV ----------	1	
-32	210100	SHAFT & WORM ASSEMBLY-SPEED ADJUSTMENT WGV ----------	1	
-33	210214	SEAT-SPEEDER SPRING WGV ----------	1	
-34	192528	SPRING-SPEEDER WGV ----------	1	
-35	210269	PLUNGER ASSEMBLY-PILOT VALVE WGV ----------	1	
-36	180231	BEARING-PILOT VALVE WGV ----------	1	
-37	182684	O RING WGV ----------	1	
-38	218446	PLUG-RELIEF VALVE WGV ----------	1	
-39	186320	GASKET WGV ----------	1	
-40	210257	PLUNGER-RELIEF VALVE WGV ----------	1	
-41	192558	SPRING-RELIEF VALVE WGV ----------	1	
-42	190576	SCREW WGV ----------	1	
		A---SERIAL 18051184 THRU 18051993		
		SERIAL 185-0001 THRU 185-1149 260 HP		

Engine (Cont)

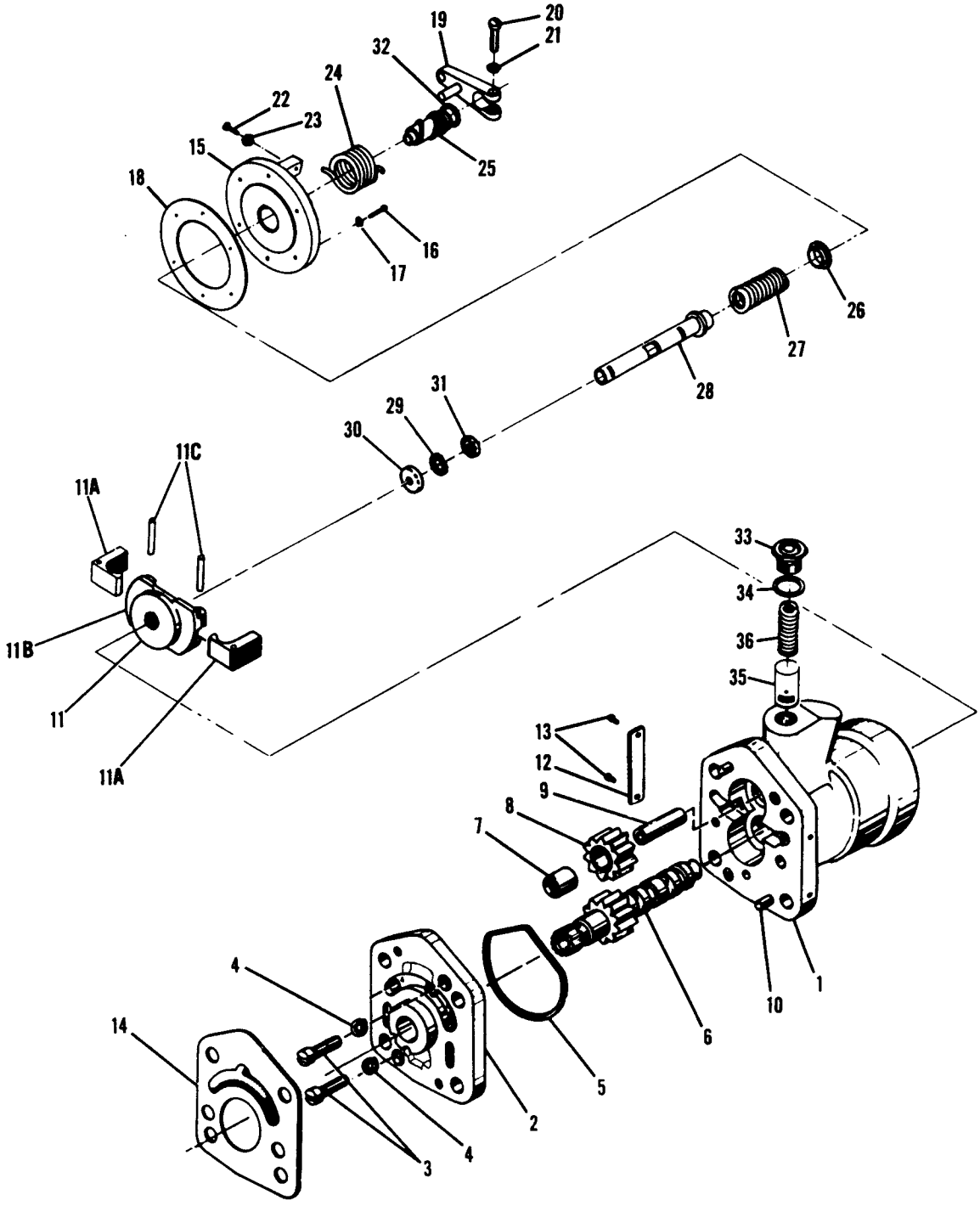

SERIAL 18051184 THRU 18052384
SERIAL 185-0001 THRU 185-1149 (260 HP)

Figure 79A. Propeller Governor Assembly

FIGURE AND INDEX NO.	PART NUMBER	DESCRIPTION 1 2 3 4 5 6 7	UNITS PER ASSY	USABLE ON CODE
79A-	C161040-0103 *	GOVERNOR ASSEMBLY-PROPELLER	1	A
- 1	210253	BODY-GOVERNOR WGV	1	
- 2	213214	BASE-GOVERNOR WGV	1	
		ATTACHING PARTS		
- 3	189744	SCREW WGV	2	
- 4	218547	WASHER WGV	2	
- 5	206336	GASKET-BASE WGV	1	
		---*---		
- 6	210396	GEAR-PUMP DRIVE WGV	1	
- 7	210036	BEARING-NEEDLE WGV	1	
- 8	204864	GEAR-PUMP IDLER WGV	1	
- 9	210031	STUD-IDLER GEAR WGB	1	
-10	210261	PIN-DOWEL WGV	2	
-11	210382	HEAD ASSEMBLY-FLYWEIGHT WGV	1	
-11A	196195	FLYWEIGHT	2	
-11B	210393	HEAD-FLYWEIGHT WGV	1	
	210394	KEEPER	1	
-11C	214202	PIN-FLYWEIGHT	2	
-12	193385	NAMEPLATE WGV	1	
		ATTACHING PARTS		
-13	189574	DRIVE PIN WGV	2	
		---*---		
-14	MS100009	GASKET-MOUNTING	1	
-15	210399	COVER-GOVERNOR WGB	1	
		ATTACHING PARTS		
-16	189482	SCREW WGB	6	
-17	189739	WASHER WGV	6	
-18	206337	GASKET-COVER WGV	1	
		---*---		
-19	210039	LEVER ASSEMBLY-SPEED ADJUSTMENT WGV	1	
		ATTACHING PARTS		
-20	188434	SCREW WGV	1	
-21	188141	WASHER WGV	1	
		---*---		
-22	218537	SCREW-STOP WGV	1	
-23	188302	NUT WGB	1	
-24	191869	SPRING-LEVER RETURN WGV	1	
-25	213232	SHAFT-SPEED ADJUSTMENT WGB	1	
-26	210326	SEAT-SPEEDER SPRING WGV	1	
-27	192709	SPRING-SPEEDER WGV	1	
-28	210398	PLUNGER ASSEMBLY-PILOT	1	
-29	180231	BEARING-PILOT VALVE WGV	1	
-30	213200	RACE-PILOT VALVE BEARING LOWER WGV	1	
-31	210216	RACE-PILOT VALVE BEARING UPPER WGV	1	
-32	182747	O RING WGV	1	
-33	218446	PLUG-RELIEF VALVE WGV	1	
-34	186320	GASKET WGV	1	
-35	210257	PLUNGER-RELIEF VALVE WGB	1	
-36	192558	SPRING-RELIEF VALVE WGV	1	

NOTE. *WHEN THIS GOVERNOR REPLACES 0750203-1 HOOF GOVERNOR ON MODEL 185 ALSO ORDER ONE EACH 0750138 ARM, AN3-5A BOLT & MS20365-1032C NUT.

A---SERIAL 18051184 THRU 18052384
SERIAL 185-0001 THRU 185-1149 260 HP

Engine (Cont)

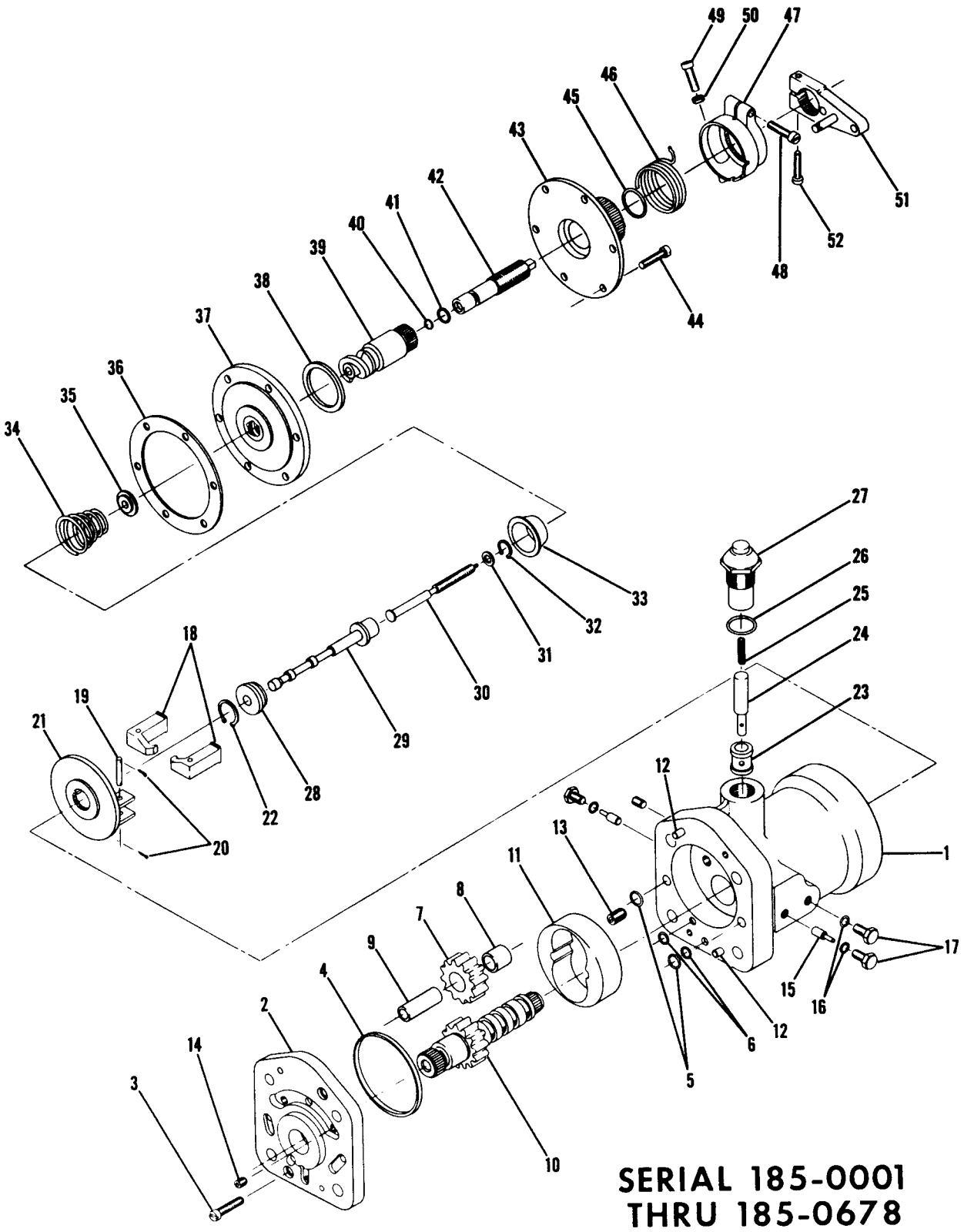

SERIAL 185-0001
THRU 185-0678

Figure 80. Propeller Governor Assembly - Hoof

FIGURE AND INDEX NO.	PART NUMBER	DESCRIPTION 1 2 3 4 5 6 7	UNITS PER ASSY	USABLE ON CODE
80 -	0750203-1	GOVERNOR ASSEMBLY-PROPELLER HOOF WHEN EXHAUSTED USE --- C161040-0103 OR 0550227-2 SEE FIGURES 79A & 81	1	A
- 1	1101-1	BODY-GOVERNOR HFP	1	
- 2	1101-3	COVER-PUMP HOUSING HFP	1	
		ATTACHING PARTS		
- 3	1114-6	SCREW HFP	2	
		---*---		
- 4	MS28775-136	O RING HFP	1	
- 5	MS28775-009	O RING HFP	2	
- 6	MS28775-008	O RING HFP	2	
- 7	1171-2	GEAR-IDLER HFP	1	
- 8	1133-3	BEARING-IDLER GEAR HFP	1	
- 9	1151-1	STUD-IDLER GEAR HFP	1	
-10	1171-9	GEAR-DRIVE HFP	1	
-11	1101-4	SEAL-RING HFP	1	
-12	1132-3	PIN-DOWEL HFP	2	
-13	1140-7	PLUG-PIPE HFP	2	
-14	1140-9	PLUG-PIPE HFP	1	
-15	1140-3	PLUG-BY PASS HFP	1	
-16	MS28775-10	O RING HFP	4	
-17	1140-5	PLUG HFP	4	
-18	1173-1	FLY WEIGHT HFP	2	
-19	1132-1	PIN-FLYWEIGHT HFP	2	
		ATTACHING PARTS		
-20	1132-5	PIN-COTTER HFP	2	
		---*---		
-21	1231-1	DISC-GOVERNOR DRIVE HFP	1	
-22	1165-2	RING-RETAINING HFP	1	
-23	1230-1	SEAT HFP	1	
-24	1226-3	PISTON HFP	1	
-25	1110-4	SPRING-RELIEF VALVE HFP	1	
-26	MS28775-014	O RING HFP	1	
-27	1140-2	PLUG-RELIEF VALVE HFP	1	
-28	1133-4	BEARING-THRUST HFP	1	
-29	1226-4	SPOOL HFP	1	
-30	1127-2	SHAFT-LIFTING HFP	1	
-31	1117-3	WASHER-SPOOL HFP	1	
-32	1165-3	RING-RETAINING HFP	1	
-33	1131-2	CUP-SPOOL HFP	1	
-34	1110-9	SPRING-CONICAL HFP	1	
-35	1103-1	END CAP-SPRING HFP	1	
-36	1107-1	GASKET-COVER HFP	1	
-37	1066-2	NUT-FLANGE HFP	1	
-38	MS28775-023	O RING	1	
-39	1127-4	SHAFT-CONTROL HFP	1	
-40	1106-1	O RING HFP	1	
-41	MS28775-008	O RING HFP	1	
-42	1104-7	SHAFT-ADJUSTING HFP	1	
-43	1104-2	COVER-GOVERNOR ASSEMBLY HFP	1	
		ATTACHING PARTS		
-44	AN500A10-10	SCREW HFP	6	
		---*---		
-45	MS28775-016	O RING HFP	1	
-46	1110-1	SPRING-TORSION HFP	1	
-47	1232-4	STOP-TRAVEL HFP	1	
		ATTACHING PARTS		
-48	1114-4	SCREW HFP	1	
		---*---		
-49	1114-7	SCREW-STOP HFP	1	
-50	1115-1	NUT-LOCK HFP	1	
-51	1104-4	LEVER-CONTROL HFP	1	
		ATTACHING PARTS		
-52	1114-2	SCREW HFP	1	
		---*---		
		A---SERIAL 185-0001 THRU 185-0678		

Engine (Cont)

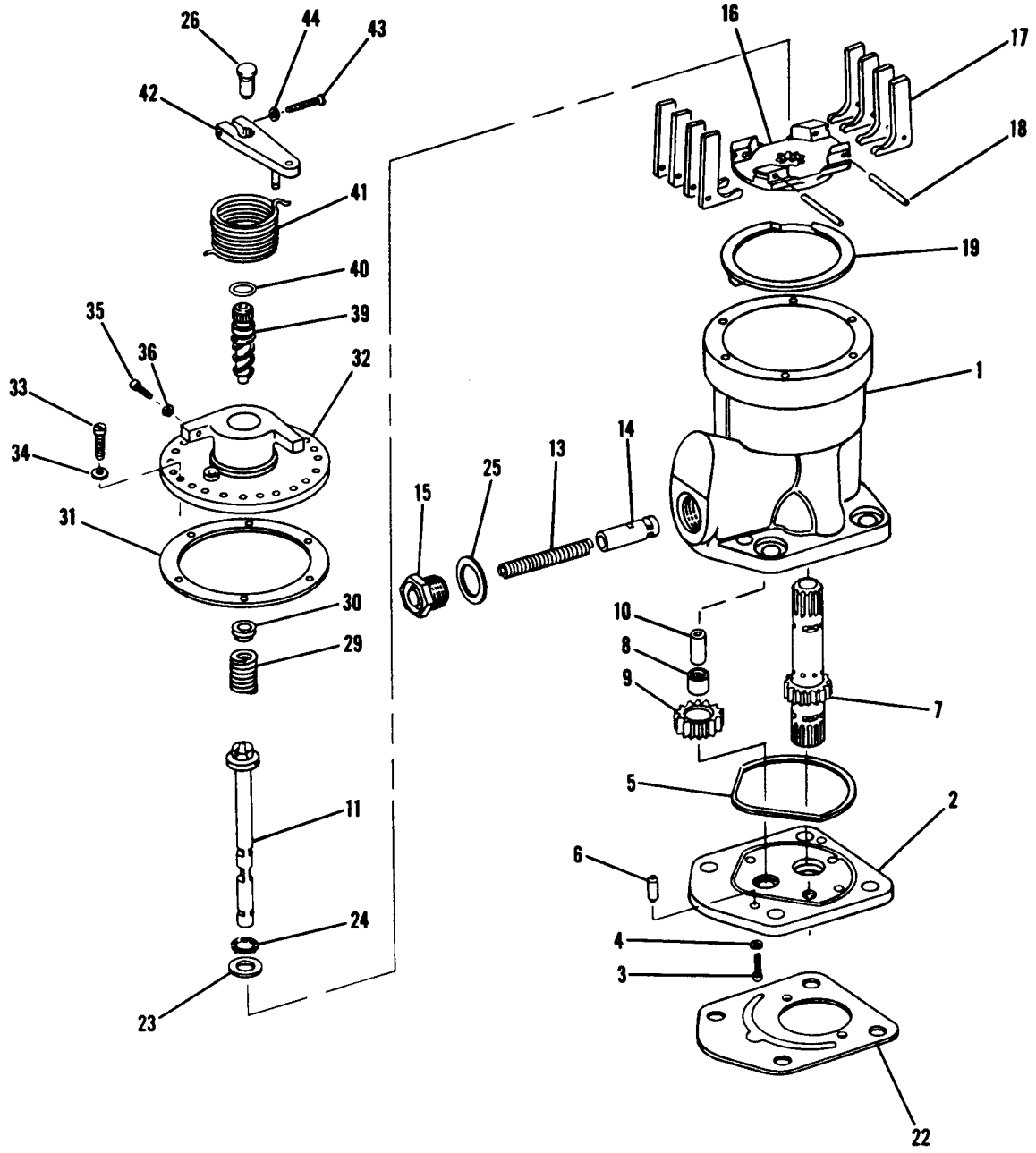

ALTERNATE
SERIAL 18051184 THRU 18052384
SERIAL 185-0001 THRU 185-1149 (260 HP)

Figure 81. Propeller Governor Assembly-Garwin

FIGURE AND INDEX NO.	PART NUMBER	DESCRIPTION 1 2 3 4 5 6 7	UNITS PER ASSY	USABLE ON CODE
81 -	0550227-2 *	GOVERNOR ASSEMBLY-PROPELLER GARWIN ALTERNATE	1	A
- 1	34-828-1	BODY GARW	1	
- 2	34-828-2	BASE GARW	1	
		ATTACHING PARTS		
- 3	AN500-8-8	SCREW	2	
- 4	AN936A8	WASHER	2	
- 5	34-828-27	GASKET GARW	1	
		---*---		
- 6	34-828-34	PIN-DOWEL GARW OVERSIZE	2	
- 7	34-828-15	GEAR-DRIVE GARW	1	
- 8	GB59	BEARING TOR	1	
- 9	34-828-19	GEAR-PUMP IDLER GARW	1	
-10	34-828-7	STUD-IDLER GEAR	1	
-11	34-831-905	VALVE-PILOT PRESSURE TO INCREASE PITCH	1	
-12		DELETED-NEVER USED		
-13	34-828-20	SPRING-RELIEF VALVE GARW	1	
-14	34-828-11	PLUNGER-RELIEF VALVE GARW	1	
-15	34-828-24	PLUG GARW	1	
-16	34-828-14	BASE-FLY WEIGHT HEAD GARW	1	
-17	34-828-9	FLY WEIGHT	8	
		ATTACHING PARTS		
-18	B1316	PIN-DOWEL TOR	2	
		---*---		
-19	34-828-26	RING-SNAP GARW	1	
-20		DELETED NOT PROCURABLE		
-21		DELETED NOT PROCURABLE		
-22	MS100009	GASKET	1	
-23	34-828-12	RACE-BEARING GARW	1	
-24	R5673	BEARING NICE	1	
-25	34-828-25	WASHER-FLAT GARW	1	
-26	34-828-31	PLUG GARW	1	
-27		DELETED AVAILABLE IN 34-831-905 ASSEMBLY ONLY		
-28		DELETED AVAILABLE IN 34-831-905 ASSEMBLY ONLY		
-29	34-828-8	SPRING-SPEEDER GARW	1	
-30	34-828-10	SEAT-SPEEDER SPRING UPPER GARW	1	
-31	34-828-28	SEAL-COVER GARW	1	
-32	34-828-903	COVER ASSEMBLY GARW	1	
		ATTACHING PARTS		
-33	AN503-8-10	SCREW	6	
-34	AN935-8L	WASHER-LOCK	6	
		---*---		
-35	AN503-8-16	SCREW	1	
-36	AN340-8	NUT	1	
-37		DELETED OFFERED IN ASSEMBLY ONLY		
-38		DELETED OFFERED IN ASSEMBLY ONLY		
-39	34-828-907	SHAFT & GEAR ASSEMBLY GARW	1	
-40	AN622789	O RING	1	
-41	34-828-13	SPRING-CONTROL LEVER GARW	1	
-42	34-828-902	LEVER ASSEMBLY GARW	1	
-43	AN502-10-14	SCREW	1	
-44	AN935-10L	WASHER	1	

NOTE. *WHEN ORDERING THIS PART FOR AIRPLANES ON WHICH THIS PART REPLACES 0750203-1 HOOF GOVERNOR, ORDER UNDER PART NUMBER 0750165-200 GOVERNOR & BRACKET ASSEMBLY.

A---SERIAL 18051184 THRU 18052384
SERIAL 185-0001 THRU 185-1149 260 HP

Engine (Cont)

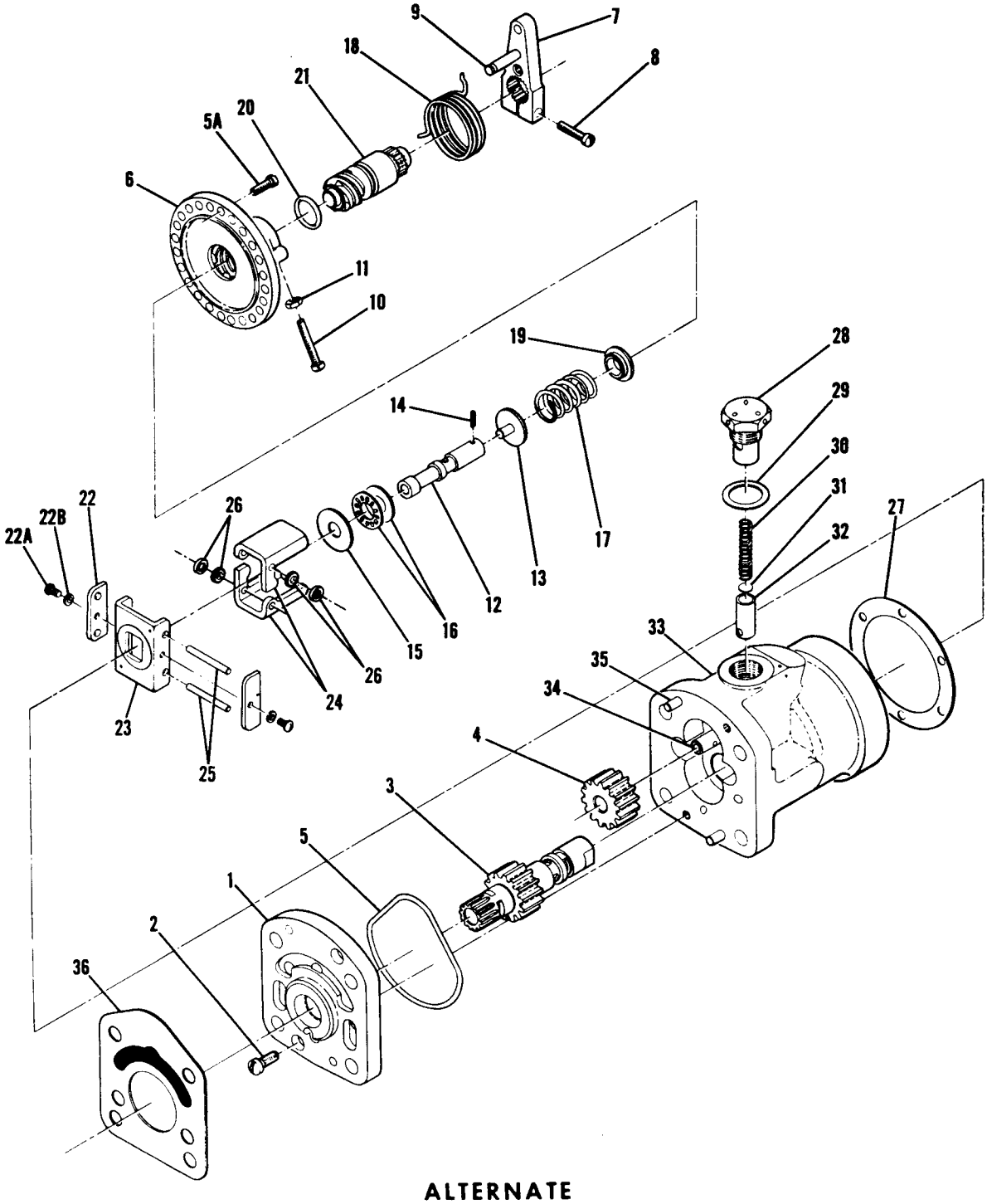

ALTERNATE

SERIAL 18051313 THRU 18052384

SERIAL 185-0001 THRU 185-1149 (260 HP)

Figure 81A. Governor Assembly

FIGURE AND INDEX NO.	PART NUMBER	DESCRIPTION 1 2 3 4 5 6 7	UNITS PER ASSY	USABLE ON CODE
81A-	C161030-0102	GOVERNOR ASSEMBLY ALTERNATE WEU C161031-0101	1	A
	C161031-0101 *	GOVERNOR ASSEMBLY MCCAULEY C290D3/T1	1	A
- 1	C20057	COVER-PUMP HOUSING MCL	1	
		ATTACHING PARTS		
- 2	AN500A10-8	SCREW	2	
		---*---		
- 3	C20073	GEAR-DRIVE MCL	1	
- 4	A20107	GEAR ASSY-IDLER MCL	1	
- 5	A1633-36	O RING MCL	1	
	B20085-1	HEAD ASSEMBLY-CONTROL MCL	1	
		ATTACHING PARTS		
- 5A	AN503-8-8	SCREW	6	
		---*---		
- 6	B20055	HOUSING ASSEMBLY-COVER MCL	1	
- 7	A20199	LEVER ASSEMBLY-CONTROL MCL	1	
		ATTACHING PARTS		
- 8	AN503-8-12	SCREW	1	
		---*---		
- 9	A20034	PIN-TORSION SPRING MCL	1	
-10	AN503-8-12	SCREW	2	
-11	AN340-8	NUT	2	
	A20266	PILOT SPOOL & END FITTING ASSEMBLY MCL	1	
-12	B20066	SPOOL-PILOT MCL	1	
-13	A20265	END FITTING-SPOOL MCL	1	
		ATTACHING PARTS		
-14	A3150-8	ROLL PIN MCL	1	
		---*---		
-15	A20071	RACE-BEARING MCL	1	
-16	A20086	BEARING-THRUST MCL	1	
-17	A20069-1	SPRING-SPEEDER MCL	1	
-18	B20040	SPRING-TORSIONAL MCL	1	
-19	A20068	SEAT-SPRING	1	
-20	MS28775-113	O RING MCL	1	
-21	C20075	SHAFT-CONTROL MCL	1	
	A20084E	DRIVE DISC & FLYWEIGHT ASSEMBLY MCL	2	
-22	A20238	RETAINER-FLYWEIGHT PIN	1	
		ATTACHING PARTS		
-22A	AN500A8-4	SCREW	1	
-22B	AN960-8	WASHER	1	
		---*---		
-23	A20063B	DISC-DRIVE MCL	2	
-24	A20064A	FLYWEIGHT MCL	1	
		ATTACHING PARTS		
-25	A20239	PIN-FLYWEIGHT MCL	2	
-26	A20072A	SPACER-FLYWEIGHT MCL	1	
		---*---		
-27	A20022	GASKET-COVER MCL	1	
-28	B20076	PLUG-RELIEF VALVE MCL	1	
-29	A20078	WASHER MCL	1	
-30	A20079	SPRING-PRESSURE RELIEF MCL	AR	
-31	A20081	SHIM-PRESSURE RELIEF MCL	1	
-32	B20077	PISTON MCL	1	
-33	B20082	BODY ASSEMBLY-GOVERNOR MCL	1	
-34	A20026	STUD-IDLER GEAR MCL	2	
-35	A20027	PIN-DOWEL MCL	1	
-36	MS100009	GASKET-MOUNTING		

NOTE. *PARTS BREAKDOWN SHOWN ON THIS FIGURE IS NOT APPLICABLE TO C161031-0101. SEE APPLICABLE MCCAULEY MANUAL FOR PARTS BREAKDOWN OF THIS ASSEMBLY.

A---SERIAL 18051313 THRU 18052384
SERIAL 185-0001 THRU 185-1149 260 HP

Engine (Cont)

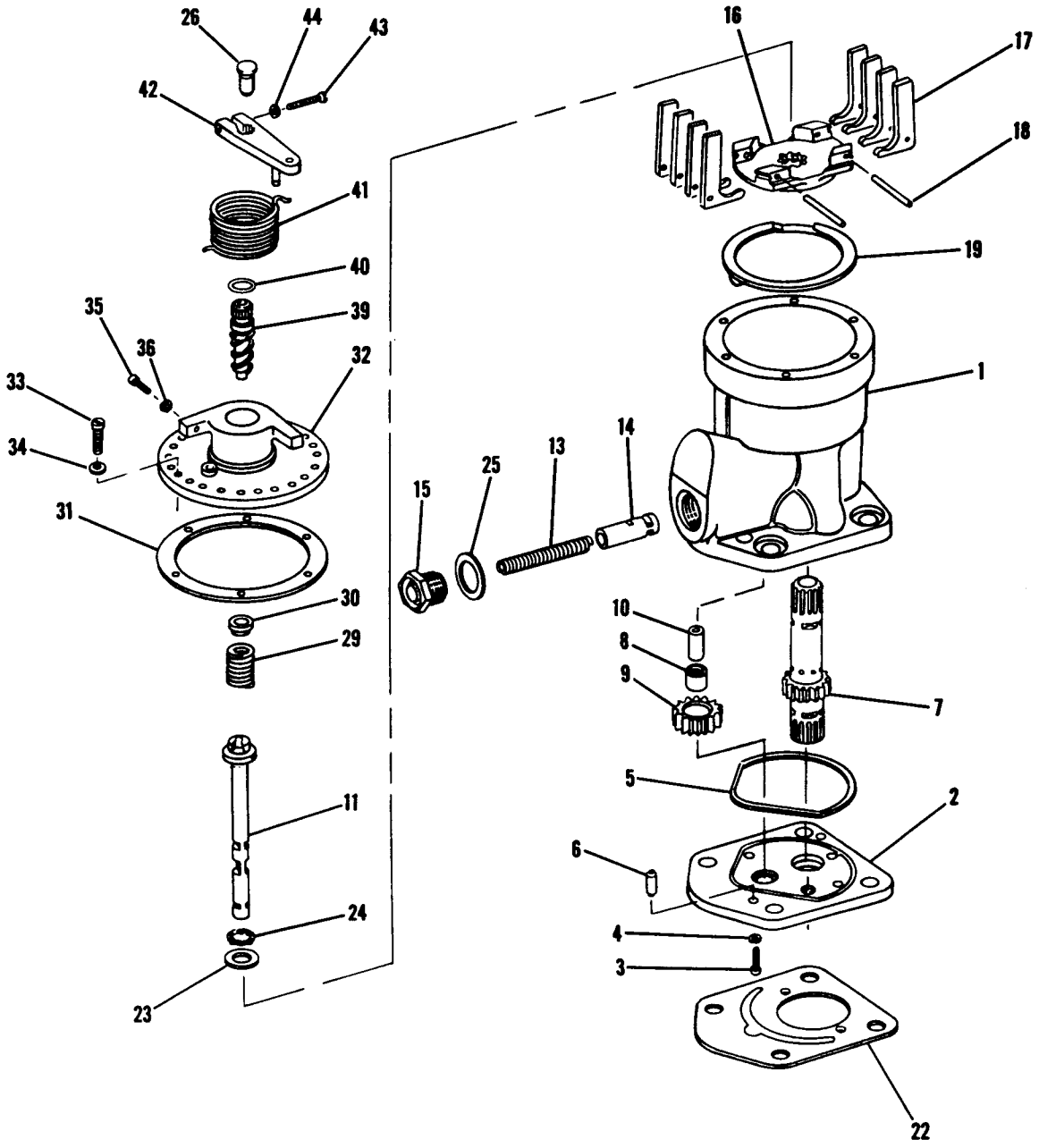

SERIAL 185-0968 THRU 18502310 (300 HP)

Figure 81B. Propeller Governor Assembly-Garwin

FIGURE AND INDEX NO.	PART NUMBER	DESCRIPTION 1 2 3 4 5 6 7	UNITS PER ASSY	USABLE ON CODE
818-	0550227-4	GOVERNOR ASSEMBLY-PROPELLER GARWIN	1	A
- 1	34-828-1	BODY GARW	1	
- 2	34-828-2	BASE GARW	1	
		ATTACHING PARTS		
- 3	AN500-8-8	SCREW	2	
- 4	AN936A8	WASHER	2	
- 5	34-828-27	GASKET GARW	1	
		---*---		
- 6	34-828-34	PIN-DOWEL GARW OVERSIZE	2	
- 7	34-828-15	GEAR-DRIVE GARW	1	
- 8	G859	BEARING TOR	1	
- 9	34-828-19	GEAR-PUMP IDLER GARW	1	
-10	34-828-7	STUD-IDLER GEAR	1	
-11	34-831-905	VALVE-PILOT PRESSURE TO INCREASE PITCH	1	
-12		DELETED, NEVER USED		
-13	34-828-20	SPRING-RELIEF VALVE GARW	1	
-14	34-828-11	PLUNGER-RELIEF VALVE GARW	1	
-15	34-828-24	PLUG GARW	1	
-16	34-828-14	BASE-FLY WEIGHT HEAD GARW	1	
-17	34-828-9	FLY WEIGHT	8	
		ATTACHING PARTS		
-18	B1316	PIN-DOWEL TOR	2	
		---*---		
-19	34-828-26	RING-SNAP GARW	1	
-20		DELETED NOT PROCURABLE		
-21		DELETED NOT PROCURABLE		
-22	MS100009	GASKET	1	
-23	34-828-12	RACE-BEARING GARW	1	
-24	R5673	BEARING NICE	1	
-25	34-828-25	WASHER-FLAT GARW	1	
-26	34-828-31	PLUG GARW	1	
-27		DELETED AVAILABLE IN 34-831-905 ASSEMBLY ONLY		
-28		DELETED AVAILABLE IN 34-831-905 ASSEMBLY ONLY		
-29	34-828-8	SPRING-SPEEDER GARW	1	
-30	34-828-10	SEAT-SPEEDER SPRING UPPER GARW	1	
-31	34-828-28	SEAL-COVER GARW	1	
-32	34-828-903	COVER ASSEMBLY GARW	1	
		ATTACHING PARTS		
-33	AN503-8-10	SCREW	6	
-34	AN935-8L	WASHER-LOCK	6	
		---*---		
-35	AN503-8-16	SCREW	1	
-36	AN340-8	NUT	1	
-37		DELETED NOT PROCURABLE		
-38		DELETED NOT PROCURABLE		
-39	34-828-907	SHAFT & GEAR ASSEMBLY GARW	1	
-40	AN622789	O RING	1	
-41	34-828-13	SPRING-CONTROL LEVER GARW	1	
-42	34-828-902	LEVER ASSEMBLY GARW	1	
-43	AN502-10-14	SCREW	1	
-44	AN935-10L	WASHER	1	

A---SERIAL 185-0968 THRU 18502310 300 HP ONLY

Engine (Cont)

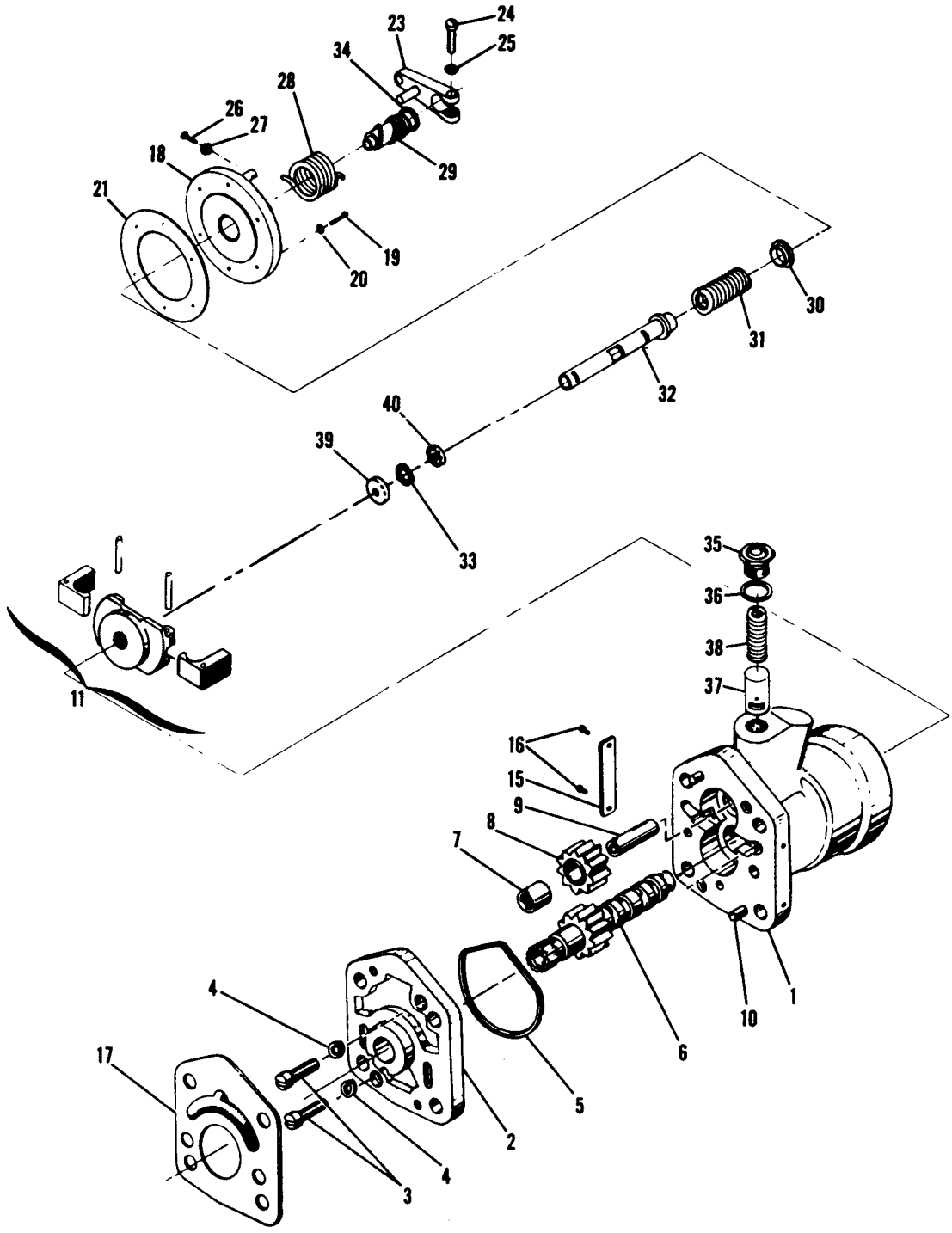

ALTERNATE

SERIAL 185-0968 THRU 18502310 (300 HP)

Figure 81C. Propeller Governor Assembly

FIGURE AND INDEX NO.	PART NUMBER	DESCRIPTION 1 2 3 4 5 6 7	UNITS PER ASSY	USABLE ON CODE
81C-	C161040-0107	GOVERNOR ASSEMBLY-PROPELLER ALTERNATE	1	A
- 1	210253	BODY-GOVERNOR WGV	1	
- 2	213214	BASE-GOVERNOR WGV	1	
		ATTACHING PARTS		
- 3	189744	SCREW WGV	2	
- 4	218547	WASHER WGV	2	
- 5	206336	O RING WGV	1	
		---*---		
- 6	210396	GEAR-PUMP DRIVE WGV	1	
- 7	210036	BEARING-NEEDLE WGV	1	
- 8	204864	GEAR-PUMP IDLER WGV	1	
- 9	210031	STUD-IDLER GEAR WGV	1	
-10	210261	PIN-DOWELL WGV	2	
-11	5021-002	HEAD ASSEMBLY-FLYWEIGHT WGV	1	
-12		DELETED, NOT AVAILABLE		
-13		DELETED, NOT AVAILABLE		
-14		DELETED, NOT AVAILABLE		
-15	193385	NAMEPLATE WGV	1	
		ATTACHING PARTS		
-16	189574	PIN-DRIVE WGV	2	
		---*---		
-17	MS100009	GASKET-MOUNTING	1	
-18	210399	COVER-GOVERNOR WGV	1	
		ATTACHING PARTS		
-19	189482	SCREW WGV	4	
-20	189739	WASHER WGV	4	
-21	206337	GASKET COVER WGV	1	
		---*---		
-22		DELETED, NEVER USED		
-23	210039	LEVER ASSEMBLY-SPEED ADJUSTMENT WGV	1	
-24	188434	SCREW WGV	1	
-25	188141	WASHER WGV	1	
-26	218537	SCREW WGV	1	
-27	188302	NUT WGV	1	
-28	191869	SPRING-LEVEP CONTROL WGV	1	
-29	213232	SHAFT & WORM ASSEMBLY-SPEED ADJUSTMENT WGV	1	
-30	210326	SEAT-SPEEDER SPRING WGV	1	
-31	192707	SPRING-SPEEDER WGV	1	
-32	210398	PLUNGER ASSEMBLY-PILOT VALVE WGV	1	
-33	180231	BEARING-PILOT VALVE WGV	1	
-34	182747	O RING WGV	1	
-35	218446	PLUG-RELIEF VALVE WGV	1	
-36	186320	GASKET WGV	1	
-37	210257	PLUNGER-RELIEF VALVE WGV	1	
-38	192558	SPRING RELIEF VALVE WGV	1	
-39	213200	RACE-PILOT VALVE BEARING LOWER WGV	1	
-40	210216	RACE-PILOT VALVE BEARING UPPER WGV	1	
		A---SERIAL 185-0968 THRU 18502310 300 HP ONLY		

Engine (Cont)

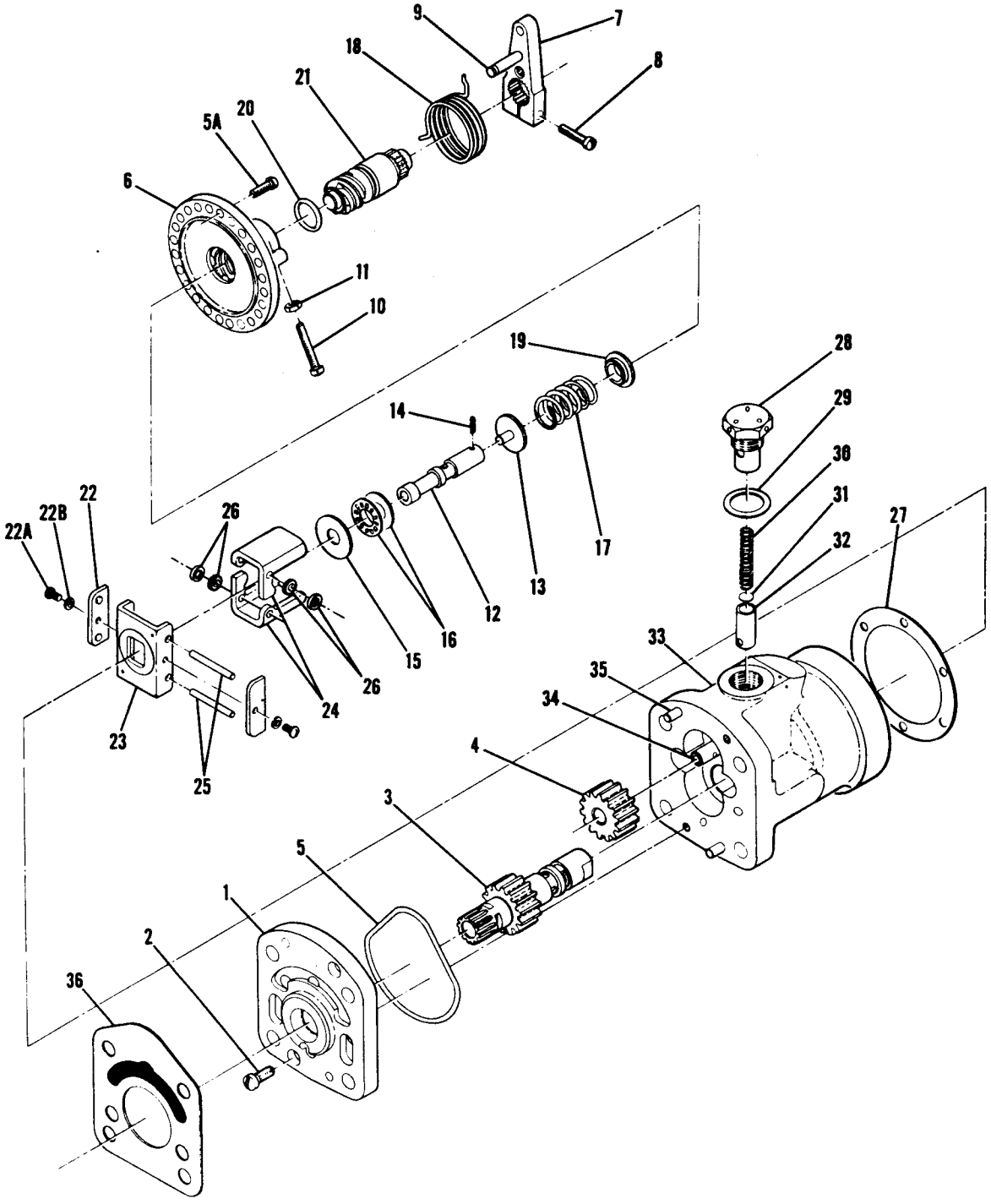

ALTERNATE

SERIAL 185-0968 THRU 18502310 (300 HP)

Figure 81D. Governor Assembly

FIGURE AND INDEX NO.	PART NUMBER	DESCRIPTION 1 2 3 4 5 6 7	UNITS PER ASSY	USABLE ON CODE
81D-	C161030-0107	GOVERNOR ASSEMBLY ALTERNATE WEU C161031-0104	1	A
	C161031-0104 *	GOVERNOR ASSEMBLY MCCAULEY C290D3/T9	1	A
- 1	C20057	COVER-PUMP HOUSING MCL	1	
		ATTACHING PARTS		
- 2	AN500A10-8	SCREW	2	
		---*---		
- 3	C20073	GEAR-DRIVE MCL	1	
- 4	A20107	GEAR ASSEMBLY-IDLER MCL	1	
- 5	A1633-36	O RING MCL	1	
	B20085-4	HEAD ASSEMBLY-CONTROL MCL	1	
		ATTACHING PARTS		
- 5A	AN503-8-8	SCREW	6	
		---*---		
- 6	B20055	HOUSING ASSEMBLY-COVER MCL	1	
- 7	A20199	LEVER ASSEMBLY-CONTROL MCL	1	
		ATTACHING PARTS		
- 8	AN503-8-12	SCREW	1	
		---*---		
- 9	A20034	PIN-TORSION SPRING MCL	1	
-10	AN503-8-12	SCREW	2	
-11	AN340-8	NUT	2	
	A20266	PILOT SPOOL & END FITTING ASSEMBLY MCL	1	
-12	B20066	SPOOL-PILOT MCL	1	
-13	A20265	END FITTING-SPOOL MCL	1	
		ATTACHING PARTS		
-14	A3150-8	ROLL PIN MCL	1	
		---*---		
-15	A20071	RACE-BEARING MCL	1	
-16	A20086	BEARING-THRUST MCL	1	
-17	A20069-4	SPRING-SPEEDER MCL	1	
-18	B20040	SPRING-TORSIONAL MCL	1	
-19	A20068	SEAT-SPRING	1	
-20	MS28775-113	O RING MCL	1	
-21	C20075	SHAFT-CONTROL MCL	1	
	A20084E	DRIVE DISC & FLYWEIGHT ASSEMBLY MCL	1	
-22	A20238	RETAINER-FLYWEIGHT PIN	2	
		ATTACHING PARTS		
-22A	AN500A8-4	SCREW	1	
-22B	AN960-8	WASHER	1	
		---*---		
-23	A20063B	DISC-DRIVE MCL	1	
-24	A20064A	FLYWEIGHT MCL	2	
		ATTACHING PARTS		
-25	A20239	PIN-FLYWEIGHT MCL	1	
-26	A20072A	SPACER-FLYWEIGHT MCL	2	
		---*---		
-27	A20022	GASKET-COVER MCL	1	
-28	B20076	PLUG-RELIEF VALVE MCL	1	
-29	A20078	WASHER MCL	1	
-30	A20079	SPRING-PRESSURE RELIEF MCL	1	
-31	A20081	SHIM-PRESSURE RELIEF MCL	AR	
-32	B20077	PISTON MCL	1	
-33	B20082	BODY ASSEMBLY-GOVERNOR MCL	1	
-34	A20026	STUD-IDLER GEAR MCL	1	
-35	A20027	PIN-DOWEL MCL	2	
-36	MS100009	GASKET-MOUNTING	1	

NOTE. *PARTS BREAKDOWN SHOWN ON THIS FIGURE IS NOT APPLICABLE TO C161031-0104. SEE APPLICABLE MCCAULEY MANUAL FOR PARTS BREAKDOWN OF THIS ASSEMBLY.

A---SERIAL 185-0968 THRU 18502310 300 HP ONLY

Engine (Cont)

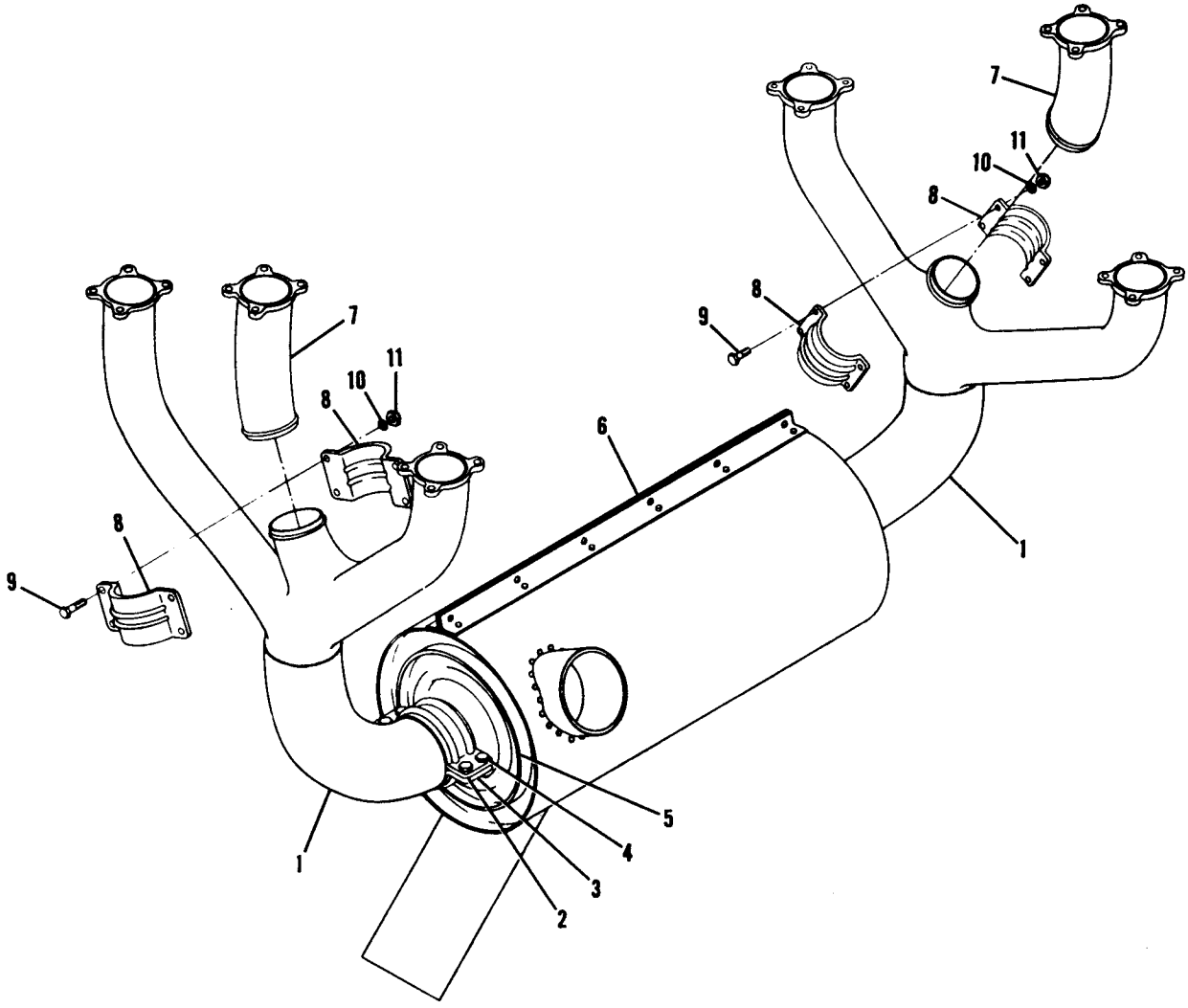

SERIAL 185-0001 THRU 18502310
SERIAL 18051313 THRU 18052384

Figure 82. Exhaust Stacks Installation

FIGURE AND INDEX NO.	PART NUMBER	DESCRIPTION 1 2 3 4 5 6 7	UNITS PER ASSY	USABLE ON CODE
82 -		EXHAUST SYSTEM INSTALLATION-ENGINE	NP	A
		EXHAUST ASSEMBLY-ENGINE	NP	
- 1	0750161-31 *	STACK ASSEMBLY-EXHAUST	2	E
	0750161-64	STACK ASSEMBLY-EXHAUST WEU 0750161-67	2	F
	0750161-67	STACK ASSEMBLY-EXHAUST	2	G
		ATTACHING PARTS		
- 2	0750161-24	CLAMP HALF	1	
- 3	0750161-22	CLAMP HALF	1	
- 4	AN3-4A	BOLT	4	
	AN960-10	WASHER	4	
	MS21044N3	NUT	4	
		---*---		
- 5	0750161-28	MUFFLER WELD ASSEMBLY-EXHAUST WEU 0750161-61	1	C
	0750161-61	MUFFLER WELD ASSEMBLY-EXHAUST	1	D
- 6	0750161-58	SHROUD ASSEMBLY-EXHAUST MUFFLER	1	
		ATTACHING PARTS		
	S1021Z8-8	SCREW	6	
	NAS395-14-3	NUT	6	
		---*---		
- 7	0750161-17 **	PIPE ASSEMBLY-EXHAUST	2	B
	0750161-36	PIPE ASSEMBLY-EXHAUST	1	
		ATTACHING PARTS		
- 8	0750161-25	CLAMP HALF	2	
- 9	AN3-4A	BOLT	4	
-10	AN960-10	WASHER	4	
-11	MS21044N3	NUT	4	
		---*---		

NOTE. *WHEN ORDERING THIS PART FOR MODEL 185 AIRPLANES PRIOR TO 185-0654 ALSO ORDER ONE 0750161-36 EXHAUST PIPE ASSEMBLY. WHEN ORDERING THIS PART TO BE USED ON THE LH SIDE OF 180 AIRPLANES SERIAL 18051313 THRU 18051551 ALSO ORDER TWO 0750225-2 CLAMPS, TWO 0750225-1 CLAMPS, TWO AN3-5A BOLTS, TWO AN3-4A BOLTS AND FOUR AN960-10L WASHER. SEE FIGURE 77 FOR INSTALLATION OF THESE PARTS.

NOTE. **USED ONLY ON MODEL 185 AIRPLANES SERIAL 185-0001 THRU 185-0653 THAT HAVE ORIGINAL STACKS.

A---SERIAL 185-0001 THRU 18502310
SERIAL 18051313 THRU 18052384
B---SERIAL 185-0001 THRU 185-0653
C---SERIAL 185-0001 THRU 18501922
SERIAL 18051313 THRU 18052214
D---SERIAL 18501923 THRU 18502310
SERIAL 18052215 THRU 18052384
E---SERIAL 185-0001 THRU 18502068
SERIAL 18051313 THRU 18052273
F---SERIAL 18502069 THRU 18502156
SERIAL 18052274 THRU 18052317
G---SERIAL 18502157 THRU 18502310
SERIAL 18052318 THRU 18052384

Engine (Cont)

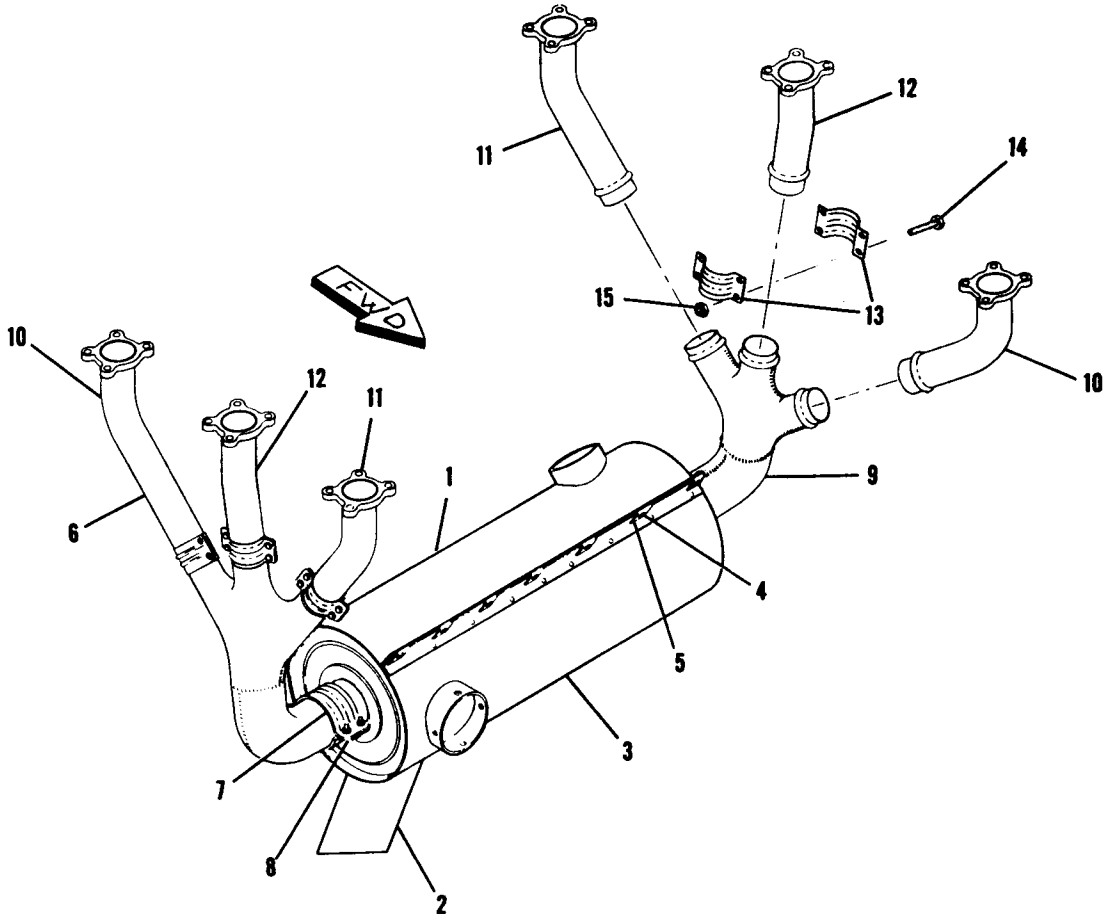

SERIAL 18051184 THRU 18051312

Figure 83. Engine Exhaust Stack

FIGURE AND INDEX NO.	PART NUMBER	DESCRIPTION 1 2 3 4 5 6 7	UNITS PER ASSY	USABLE ON CODE
83 -		EXHAUST STACK INSTALLATION	NP	A
- 1		STACK ASSEMBLY-EXHAUST ORDER DETAIL PARTS	NP	
- 2	0750130-44	MUFFLER ASSEMBLY	1	
- 3	0750130-46	SHROUD ASSEMBLY	1	
		ATTACHING PARTS		
- 4	S1021Z8-8	SCREW	2	
- 5	NAS446-4-3	NUTPLATE TIN A1778-8Z-3	7	
		---*---		
- 6	0750130-6	COLLECTOR ASSEMBLY	2	
		ATTACHING PARTS		
- 7	0750130-42	CLAMP ASSEMBLY	2	
- 8	AN3-4A	BOLT	4	
	MS21044N3	NUT	4	
		---*---		
- 9	0750130-48	COLLECTOR-EXHAUST	1	
-10	0750130-3	TUBE ASSEMBLY-REAR	1	
-11	0750130-4	TUBE ASSEMBLY-FORWARD	1	
-12	0750130-5	TUBE ASSEMBLY-CENTER	1	
		ATTACHING PARTS		
-13	0750130-31	CLAMP-TUBE	2	
-14	AN3-4A	BOLT	4	
-15	MS21044N3	NUT	4	
		---*---		
		A---SERIAL 18051184 THRU 18051312		

Engine (cont)

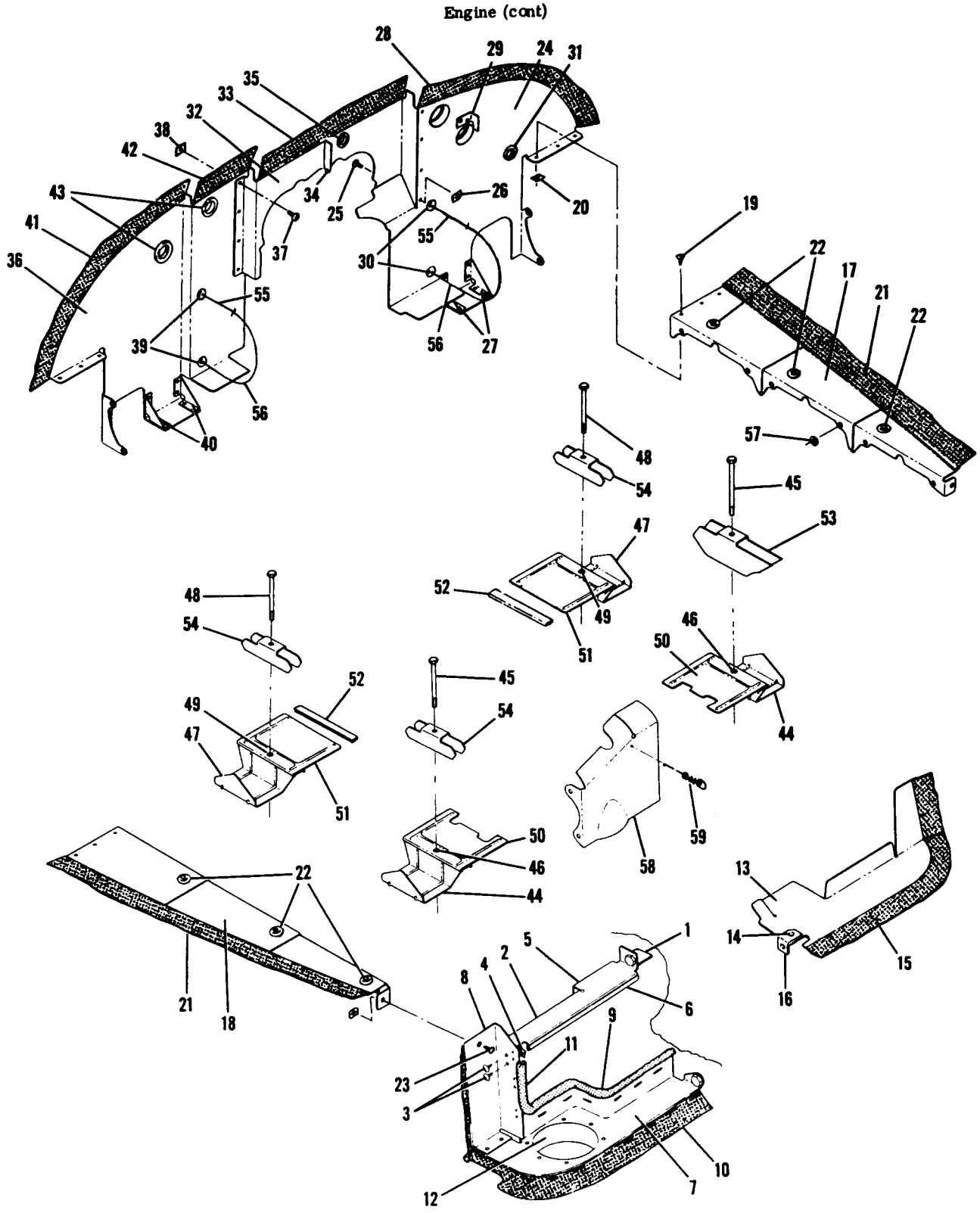

SERIAL 185-0001 THRU 18502310

Figure 84. Engine Baffles Installation

FIGURE AND INDEX NO.	PART NUMBER	DESCRIPTION 1 2 3 4 5 6 7	UNITS PER ASSY	USABLE ON CODE
84 -		BAFFLES INSTALLATION-ENGINE	NP	A
- 1	0750152-2	BAFFLE-OIL COOLER INBOARD	1	
- 2	0700309-2	BAFFLE ASSEMBLY-OIL COOLER	1	
	SEE FIG 77A	BAFFLE-NON CONGEALING OIL COOLER	1	
		ATTACHING PARTS		
- 3	S1021Z6-6	SCREW	2	
- 4	NAS446-2-3	NUT	2	
		---*---		
- 5	0700309-5	BAFFLE-OIL COOLER	1	
- 6	S202RB	CHANNEL-7.30 IN LG BULK ITEM REF S-202R7.30B	1	
- 7	0700318-2	BAFFLE ASSEMBLY-OIL COOLER	1	
	SEE FIG 77A	BAFFLE ASSEMBLY-NON CONGEALING OIL COOLER	1	
- 8	0700318-4	BAFFLE-VERTICAL	1	
- 9	0700318-3	BAFFLE-HORIZONTAL	1	
-10	0700318-7	SEAL-HORIZONTAL BAFFLE	AR	
-11	S202RB	CHANNEL BULK ITEM	1	
-12	0713019-33	UNION	1	
-13	0750128-38	BAFFLE ASSEMBLY-FRONT LH	1	
		ATTACHING PARTS		
-14	S1021Z6-6	SCREW	1	
	NAS446-2-3	NUT		
		---*---		
-15	0750128-37	SEAL	1	
-16	0750128-42	BRACKET ASSEMBLY	1	
	NAS680A3	NUTPLATE	1	B
-17	0750128-58	BAFFLE ASSEMBLY-HORIZONTAL LH	1	C
	0750128-93	BAFFLE ASSEMBLY-HORIZONTAL LH	1	B
-18	0750128-57	BAFFLE ASSEMBLY-HORIZONTAL RH	1	C
	0750128-94	BAFFLE ASSEMBLY-HORIZONTAL RH		
		ATTACHING PARTS		
-19	S1021Z6-6	SCREW	3	
-20	NAS446-2-3	NUT	3	
		---*---		
-21	0750128-13	SEAL	1	
-22	MS35489-12	GROMMET	3	
-23	S1021Z6-6	SCREW	1	
-24	0750128-55	BAFFLE ASSEMBLY-VERTICAL LH	1	F
	0750128-97	BAFFLE ASSEMBLY-VERTICAL LH	1	G
		---*---		
-25	S1021Z6-6	SCREW	4	
-26	NAS446-2-3	NUT	4	
		---*---		
-27	0750128-1	GUSSET-BAFFLE	2	
-28	0750128-17	SEAL-BAFFLE	1	
-29	1250106-1	CLIP-FUEL HOSE ATTACH	1	
-30	MS20230B20	GROMMET	2	
-31	MS35489-110	GROMMET	1	
-32	0750128-21	BAFFLE ASSEMBLY-REAR	1	
-33	0750128-16	SEAL-BAFFLE	1	
-34	0750117-21	BRACKET-BAFFLE	1	
-35	MS35489-118	GROMMET	1	
-36	0750128-66	BAFFLE ASSEMBLY-VERTICAL RH	1	
		ATTACHING PARTS		
-37	S1021Z6-6	SCREW	4	
-38	NAS446-2-3	NUT	4	
-39	MS20230B20	GROMMET	2	
		---*---		
-40	0750128-11	GUSSET-BAFFLE	2	
-41	0750128-14	SEAL-BAFFLE	1	
-42	0750128-15	SEAL-BAFFLE	1	
-43	MS35489-11	GROMMET	2	D
	MS35489-5	GROMMET	2	E
-44	0750135-1	BAFFLE ASSEMBLY-INTERCYLINDER	2	
		ATTACHING PARTS		
-45	AN3-67A	BOLT	1	
		---*---		

CONTINUED ON NEXT PAGE

FIGURE AND INDEX NO.	PART NUMBER	DESCRIPTION 1 2 3 4 5 6 7	UNITS PER ASSY	USABLE ON CODE
84 -46	NAS680A3	NUTPLATE	1	
-47	0750135-1	BAFFLE ASSEMBLY-INTERCYLINDER	2	
		ATTACHING PARTS		
-48	AN3-60A	BOLT	1	
		---*---		
-49	NAS680A3	NUTPLATE	1	
-50	0750135-3	BAFFLE-INTERCYLINDER	3	
-51	0750135-8	BAFFLE ASSEMBLY	2	B
	0750135-4	BAFFLE ASSEMBLY	2	C
-52	0750135-11	SEAL	1	
-53	0851700-96	SUPPORT-BAFFLE FRONT LH	1	
-54	0750117-31	SUPPORT-BAFFLE	3	
-55	0450277-3	FASTENER-REAR BAFFLE TO CYLINDER UPPER	2	
-56	0450277-2	FASTENER-REAR BAFFLE TO CYLINDER LOWER	2	
-57	AN960D416	WASHER	32	
-58	1250134-1	BAFFLE-NO. 5 CYLINDER	1	
-59	0450277-10	FASTENER	1	
		A---SERIAL 185-0001 THRU 18502310		
		B---SERIAL 185-0001 THRU 185-0512		
		C---SERIAL 185-0513 THRU 18502310		
		D---SERIAL 185-0001 THRU 185-0653		
		E---SERIAL 185-0654 THRU 18502310		
		F---SERIAL 185-0001 THRU 185-0776		
		G---SERIAL 185-0777 THRU 18502310		

Engine (Cont)

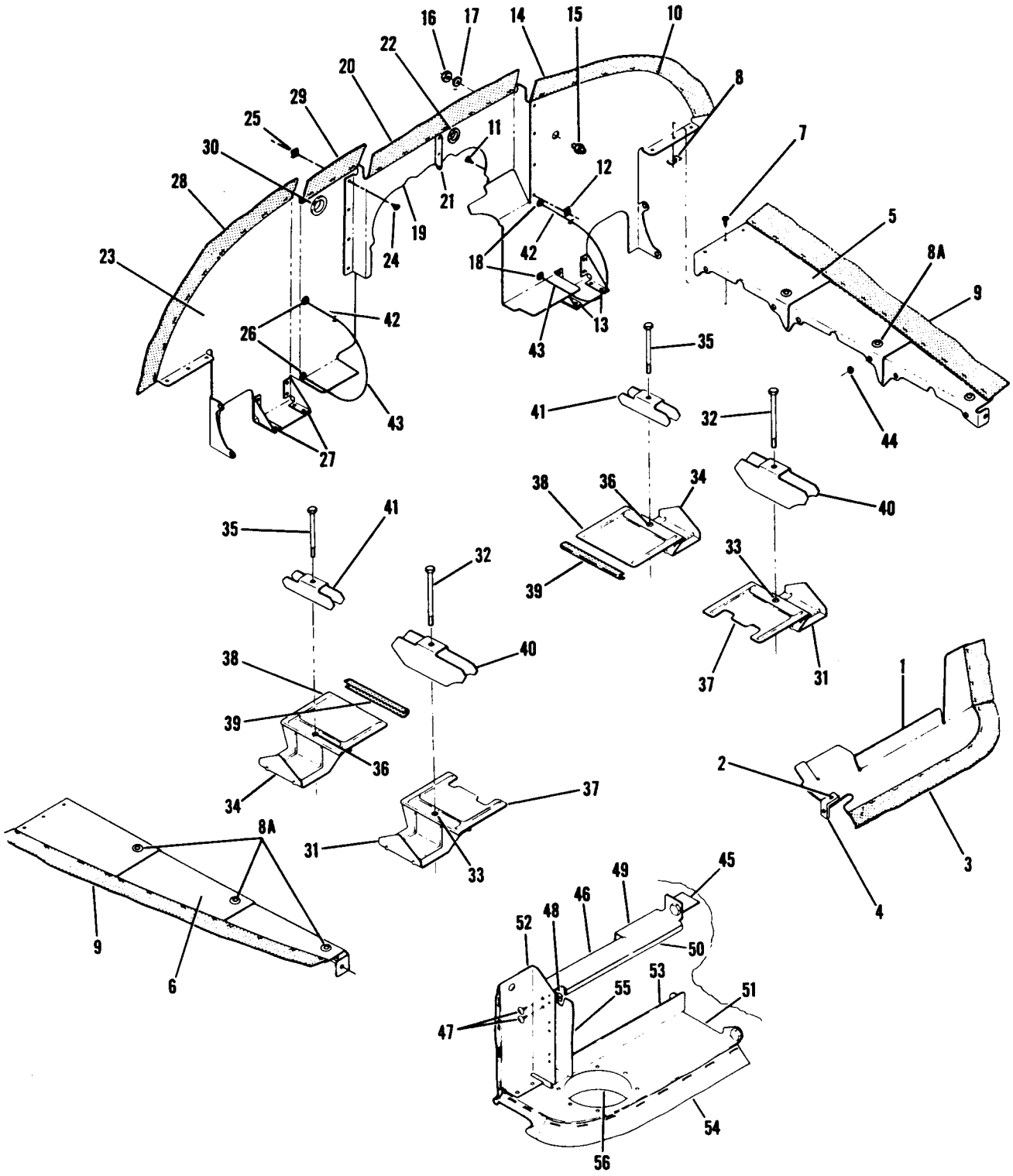

SERIAL 18051184 THRU 18052384

Figure 85. Engine Baffles Installation

FIGURE AND INDEX NO.	PART NUMBER	DESCRIPTION 1 2 3 4 5 6 7	UNITS PER ASSY	USABLE ON CODE
85 -		BAFFLES INSTALLATION-ENGINE	NP	A
- 1	0750128-38	BAFFLE ASSEMBLY-FRONT LH	1	
		ATTACHING PARTS		
- 2	S1021Z6-6	SCREW	1	
	NAS446-2-3	NUT	1	
		---*---		
- 3	0750128-37	SEAL-BAFFLE	1	
- 4	0750128-42	BRACKET ASSEMBLY	1	
	NAS680A3	NUTPLATE	1	
- 5	0750128-93	BAFFLE ASSEMBLY-HORIZONTAL LH	1	
- 6	0750128-94	BAFFLE ASSEMBLY-HORIZONTAL RH	1	
		ATTACHING PARTS		
- 7	S1021Z6-6	SCREW	3	
- 8	NAS446-2-3	NUT	3	
		---*---		
- 8A	MS35489-12	GROMMET	2	
- 9	0750128-13	SEAL-BAFFLE	1	B
-10	0750128-44	BAFFLE ASSEMBLY-VERTICAL LH	1	C
	0750128-100	BAFFLE ASSEMBLY-VERTICAL LH		
		ATTACHING PARTS		
-11	S1021Z6-6	SCREW	4	
-12	NAS446-2-3	NUT	4	
		---*---		
-13	0750128-11	GUSSET-BAFFLE	2	
-14	0750128-17	SEAL-BAFFLE	1	
-15	AN832-2D	UNION-BAFFLE	1	B
		ATTACHING PARTS		
-16	AN924-2D	NUT	1	B
-17	AN960D516	WASHER	1	B
		---*---		
-18	MS20230820	GROMMET	2	
-19	0750128-21	BAFFLE ASSEMBLY-REAR	1	
-20	0750128-16	SEAL-BAFFLE	1	
-21	0750117-21	BRACKET-BAFFLE	1	
-22	MS35489-118	GROMMET	1	
-23	0750128-53	BAFFLE ASSEMBLY-VERTICAL RH		
		ATTACHING PARTS		
-24	S1021Z6-6	SCREW	4	
-25	NAS446-2-3	NUT	4	
-26	MS20230820	GROMMET	2	
		---*---		
-27	0750128-11	GUSSET-BAFFLE	2	
-28	0750128-14	SEAL-BAFFLE	1	
-29	0750128-15	SEAL-BAFFLE	1	
-30	MS35489-20	GROMMET	1	
-31	0750135-1	BAFFLE ASSEMBLY-INNER CYLINDER FORWARD	2	
		ATTACHING PARTS		
-32	AN3-67A	BOLT	1	
		---*---		
-33	NAS680A3	NUTPLATE	1	
-34	0750135-1	BAFFLE ASSEMBLY-INNER CYLINDER REAR	2	
		ATTACHING PARTS		
-35	AN3-60A	BOLT	1	
		---*---		
-36	NAS680A3	NUTPLATE	1	
-37	0750135-3	BAFFLE-INNER CYLINDER	3	
-38	0750135-4	BAFFLE ASSEMBLY	2	
-39	0750135-11	SEAL-BAFFLE	1	
-40	0851700-96	SUPPORT-BAFFLE FRONT	2	
-41	0750117-31	SUPPORT-BAFFLE REAR	2	
-42	0450277-3	FASTENER-REAR BAFFLE TO CYLINDER UPPER	2	
-43	0450277-2	FASTENER-REAR BAFFLE TO CYLINDER LOWER	2	
-44	AN960D416	WASHER	32	
-45	0750152-1	BAFFLE-OIL COOLER INBOARD	1	
-46	0750148-2	BAFFLE ASSEMBLY-OIL COOLER	1	
	SEE FIG 77A	BAFFLE ASSEMBLY-NON CONGEALING OIL COOLER	1	
		ATTACHING PARTS		
-47	S1021Z6-6	SCREW	2	
-48	NAS446-2-3	NUT	2	
		---*---		

CONTINUED ON NEXT PAGE

FIGURE AND INDEX NO.	PART NUMBER	DESCRIPTION 1 2 3 4 5 6 7	UNITS PER ASSY	USABLE ON CODE
85 -49	0750148-1	BAFFLE-OIL COOLER	1	
-50	S202RB	CHANNEL-BAFFLE	AR	
-51	0750149-1	BAFFLE ASSEMBLY-OIL COOLER	1	
	SEE FIG 77A	BAFFLE ASSEMBLY-NON CONGEALING OIL COOLER	1	
-52	0750149-2	BAFFLE-VERTICAL	1	
-53	0750149-3	BAFFLE-HORIZONAL	1	
-54	0750149-4	SEAL-HORIZONTAL BAFFLE	1	
-55	0750149-5	SEAL-VERTICAL BAFFLE	1	
-56	0713019-33	UNION-BAFFLE	1	
		A---SERIAL 18051184 THRU 18052384		
		B---SERIAL 18051184 THRU 18051445		
		C---SERIAL 18051446 THRU 18052384		

Engine (Cont)

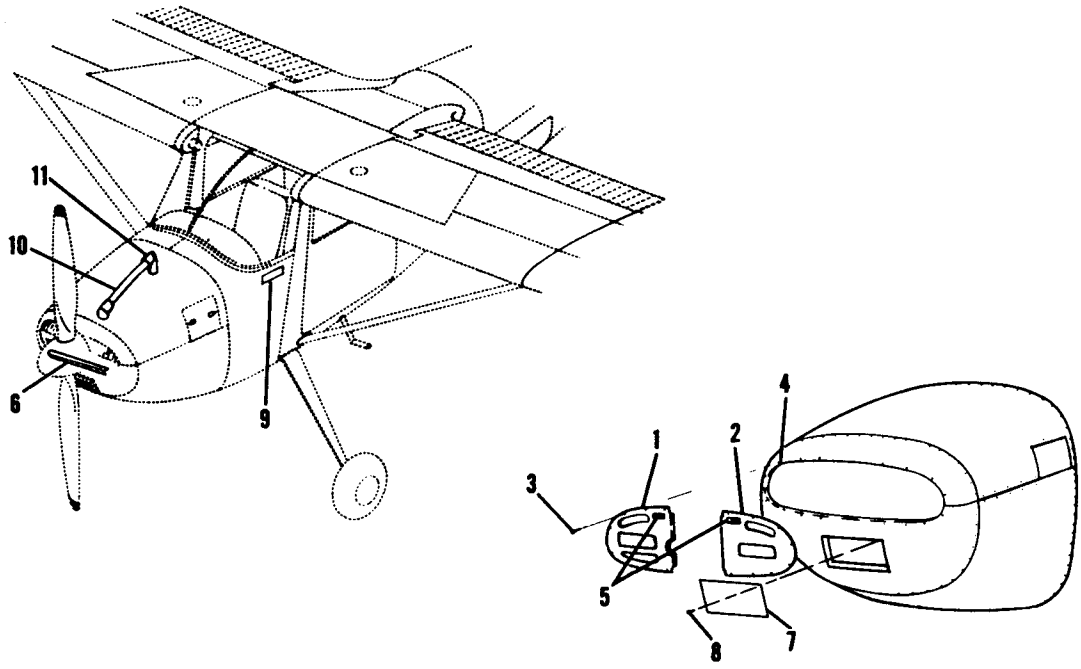

Figure 86. Winterization Equipment Installation

FIGURE AND INDEX NO.	PART NUMBER	DESCRIPTION 1 2 3 4 5 6 7	UNITS PER ASSY	USABLE ON CODE
86 -		WINTERIZATION EQUIPMENT INSTALLATION	NP	
- 1	0700319-6	COVER-COWL OPENING RH	1	D
	0700329-200	COVER ASSEMBLY-COWL OPENING-RH	1	C
- 2	0700319-5	COVER-COWL OPENING LH	1	D
	0700329-5	COVER-COWL OPENING LH	1	C
- 3	AN525-823R8	SCREW	8	
- 4	NAS1329A08K75	RIVNUT GD	8	
		---*---		
- 5	0700319-12	PLACARD-REMOVAL INSTRUCTIONS	2	E
	1205043-1	PLACARD-REMOVAL INSTRUCTIONS	2	F
- 6	0700313-25	COVER-BALANCE TUBE	1	B
- 7	0700313-64	COVER ASSEMBLY - CARBURETOR AIR BOX	1	B
	0700313-74	COVER ASSEMBLY-INDUCTION AIR BOX	1	C
		ATTACHING PARTS		
- 8	S1021Z8-6	SCREW	4	B
	A1049-8Z3	NUT TIN	4	B
	C1049-8Z67	NUT TIN ALTERNATE	4	B
	NAS395-12-3	NUT	4	C
		---*---		
- 9	0700319-13	PLACARD-WINTERIZATION	1	E
	0505009-2	PLACARD-WINTERIZATION	1	F
-10	1200191-200	TUBE ASSEMBLY-INSULATING FWD OF BAFFLE	1	
-11	1200191-201	TUBE ASSEMBLY-INSULATING AFT OF BAFFLE	1	
		A---SERIAL 185-0001 THRU 185-1149 260 HP		
		B---SERIAL 18051184 THRU 18052384		
		C---SERIAL 185-0968 THRU 18502310 300 HP		
		D---SERIAL 185-0001 THRU 185-1149 260 HP		
		SERIAL 18051184 THRU 18052384		
		E---SERIAL 185-0001 THRU 185-1447		
		SERIAL 18051184 THRU 18051993		
		F---SERIAL 185-1448 THRU 18502310		
		SERIAL 18051994 THRU 18052384		

Cowl Flaps Control System

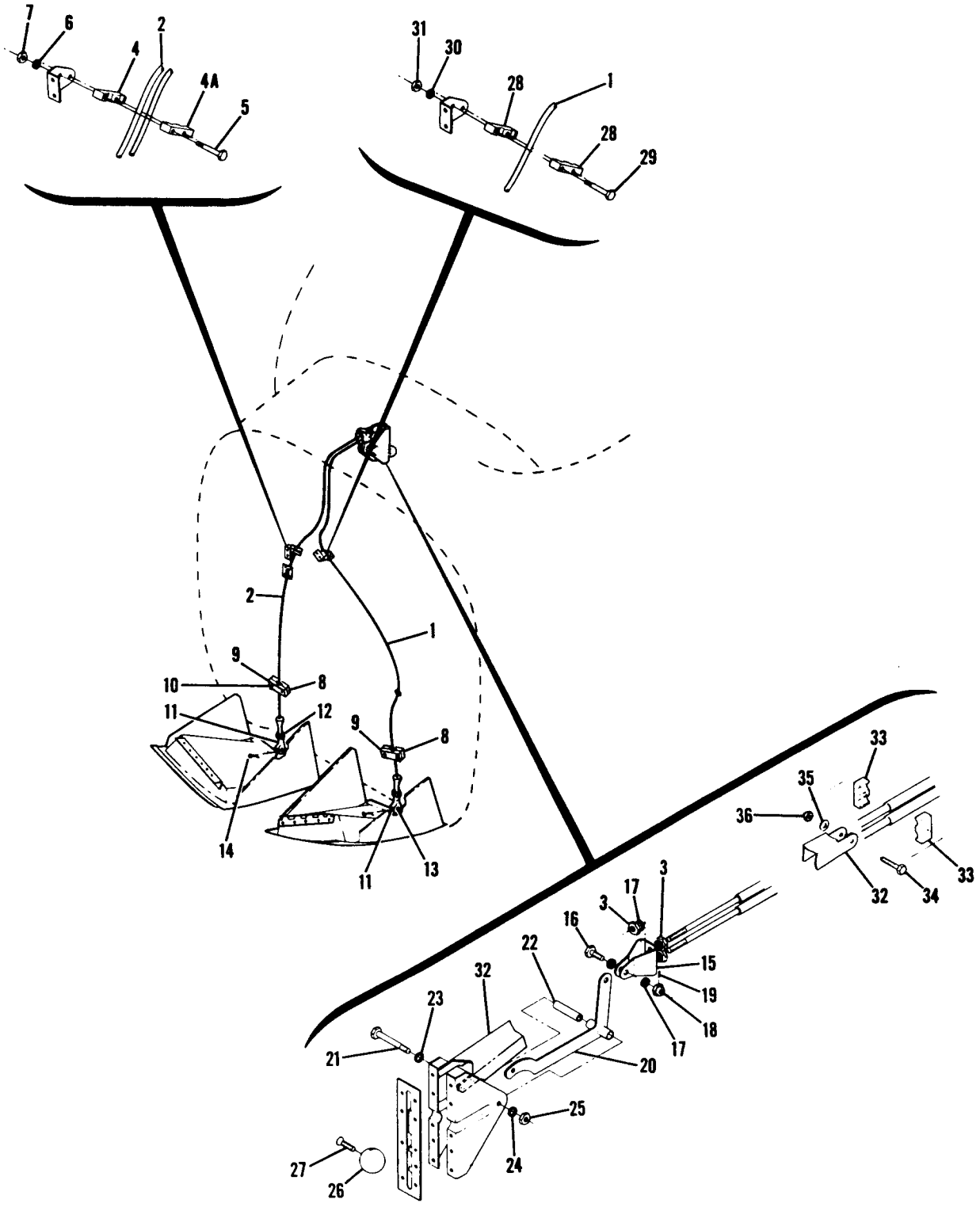

Figure 87. Cowl Flaps Control System Installation

FIGURE AND INDEX NO.	PART NUMBER	DESCRIPTION 1 2 3 4 5 6 7	UNITS PER ASSY	USABLE ON CODE
87 -		COWL FLAPS CONTROL SYSTEM INSTALLATION	NP	
- 1	S1245-3	CONTROL ASSEMBLY-COWL FLAPS LH	1	A
	S1245-1	CONTROL ASSEMBLY-COWL FLAPS LH	1	B
	S1572-1	CONTROL ASSEMBLY-COWL FLAPS LH	1	C
- 2	S1245-2	CONTROL ASSEMBLY-COWL FLAPS RH	1	
		ATTACHING PARTS		
- 3	AN316-4R	NUT	4	
	AN936B416	WASHER	4	
		---*---		
- 4	0713148-1	CLAMP	1	D
	0713307-1	MOUNT	1	C
- 4A	0713148-1	CLAMP	1	D
	0713307-2	CLAMP	1	C
		ATTACHING PARTS		
- 5	AN3-13A	BOLT	2	D
	AN520-10-R30	BOLT	2	C
- 6	AN960-10L	WASHER	2	
- 7	MS21044N3	NUT	2	
		---*---		
- 8	0713307-1	MOUNT-COWL FLAP CONTROL	2	
- 9	0713307-2	CLAMP-COWL FLAP CONTROL	2	
		ATTACHING PARTS		
-10	AN3-15A	BOLT	2	
	AN960-10L	WASHER	2	
	MS21044N3	NUT	2	
		---*---		
-11	AN486-4 *	CLEVIS	2	
		ATTACHING PARTS		
-12	AN316-4R *	NUT	1	
	0742007-1	STOP-COWL FLAP 180 FLOATPLANE ONLY	1	G
-13	MS20392-2C13 *	PIN	1	
-14	MS24665-132 *	PIN-COTTER	1	
	AN960D10 *	WASHER	1	
		---*---		
-15	0713701-2	CLEVIS	1	
		ATTACHING PARTS		
-16	AN4-5	BOLT	1	
-17	AN960-416L	WASHER	2	
-18	AN310-4	NUT	1	
-19	MS24665-134	PIN-COTTER	1	
		---*---		
-20	0713128-1	LEVER ASSEMBLY-COWL FLAP CONTROL WEU 0713128-3	1	E
	0713128-3	LEVER ASSEMBLY-COWL FLAP CONTROL	1	F
		ATTACHING PARTS		
-21	AN3-16A	BOLT	1	
-22	NAS43HT3-88	SPACER	1	
-23	AN960-516	WASHER	1	
-24	AN960-10	WASHER	1	
-25	MS21044N3	NUT	1	
		---*---		
-26	S1249-1	KNOB-LEVER ASSEMBLY	1	
		ATTACHING PARTS		
-27	AN507-1032R12	SCREW	1	
		---*---		
-28	1250401-3	CLAMP	2	C
		ATTACHING PARTS		
-29	AN3-10A	BOLT	2	C
-30	AN960-10L	WASHER	2	C
-31	MS21044N3	NUT	2	C
		---*---		
-32	0713826-1	BRACKET	1	C

CONTINUED ON NEXT PAGE

FIGURE AND INDEX NO.	PART NUMBER	DESCRIPTION 1 2 3 4 5 6 7	UNITS PER ASSY	USABLE ON CODE
87 -33	1213037-2	CLAMP	2	C
		ATTACHING PARTS		
-34	AN3-11A	BOLT	1	C
-35	AN960-10L	WASHER	1	C
-36	MS21044N3	NUT	1	C
		---*---		
		NOTE. *THESE PARTS ARE NOT USED ON AG CARRYALL SERIAL 18502037 & ON, SEE FIG 87A.		
		A---SERIAL 185-0001 THRU 185-0776 SERIAL 18051313 THRU 18051445 B---SERIAL 18051184 THRU 18051312 C---SERIAL 185-0777 THRU 18502310 SERIAL 18051446 THRU 18052384 D---SERIAL 185-0001 THRU 185-0776 SERIAL 18051184 THRU 18051445 E---SERIAL 185-0001 THRU 18502279 SERIAL 18051184 THRU 18052379 F---SERIAL 18502280 THRU 18502310 SERIAL 18052380 THRU 18052384 G---SERIAL 18052285 THRU 18052384		

Cowl Flaps Control System (Cont)

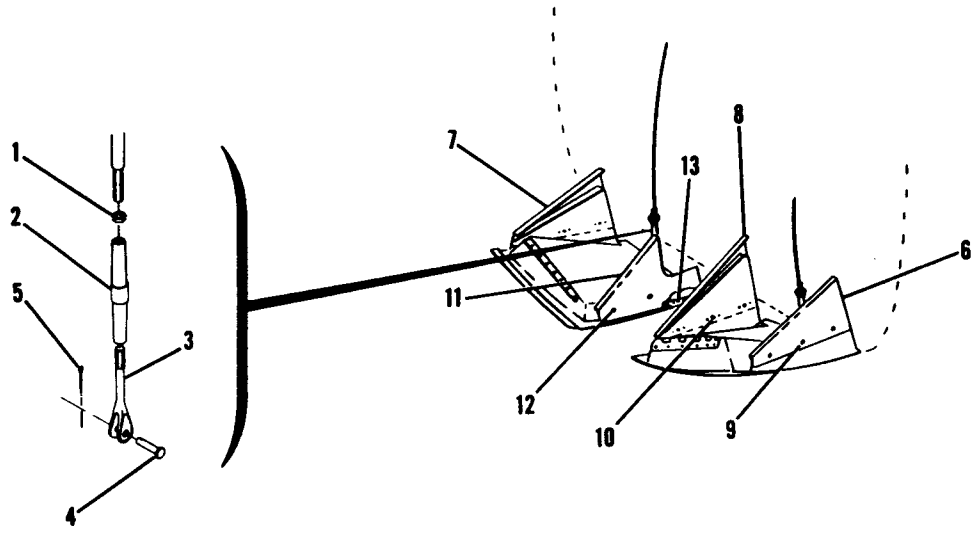

AG CARRYALL
SERIAL 18502037 THRU 18502310

Figure 87A. Cowl Flaps Extension Installation - AGcarryall

FIGURE AND INDEX NO.	PART NUMBER	DESCRIPTION 1 2 3 4 5 6 7	UNITS PER ASSY	USABLE ON CODE
87A-		COWL FLAPS EXTENSION INSTALLATION-AG CARRYALL	NP	A
- 1	AN316-4	NUT	2	
- 2	AN155B32S	BARREL	2	
- 3	AN161-22LL	FORK	2	
		ATTACHING PARTS		
- 4	MS20392-2C13	PIN	1	
- 5	MS24665-132	PIN-COTTER	1	
		---*---		
- 6	0752036-2	BAFFLE-OUTBOARD LH FLAP	1	
- 7	0752036-3	BAFFLE-OUTBOARD RH FLAP	1	
- 8	0752036-4	BAFFLE-INBOARD LH FLAP	1	
		ATTACHING PARTS		
- 9	AN520-10R8	SCREW	3	
-10	MS20365-1032C	NUT	3	
-11	0752036-6	BAFFLE ASSEMBLY-INBOARD RH FLAP	1	
		ATTACHING PARTS		
-12	AN520-10R12	SCREW	3	
	MS20365-1032C	NUT	2	
		---*---		
-13	NAS697A3	NUTPLATE	1	
		A---SERIAL 18502037 THRU 18502310 AG CARRYALL		

Ventilation System

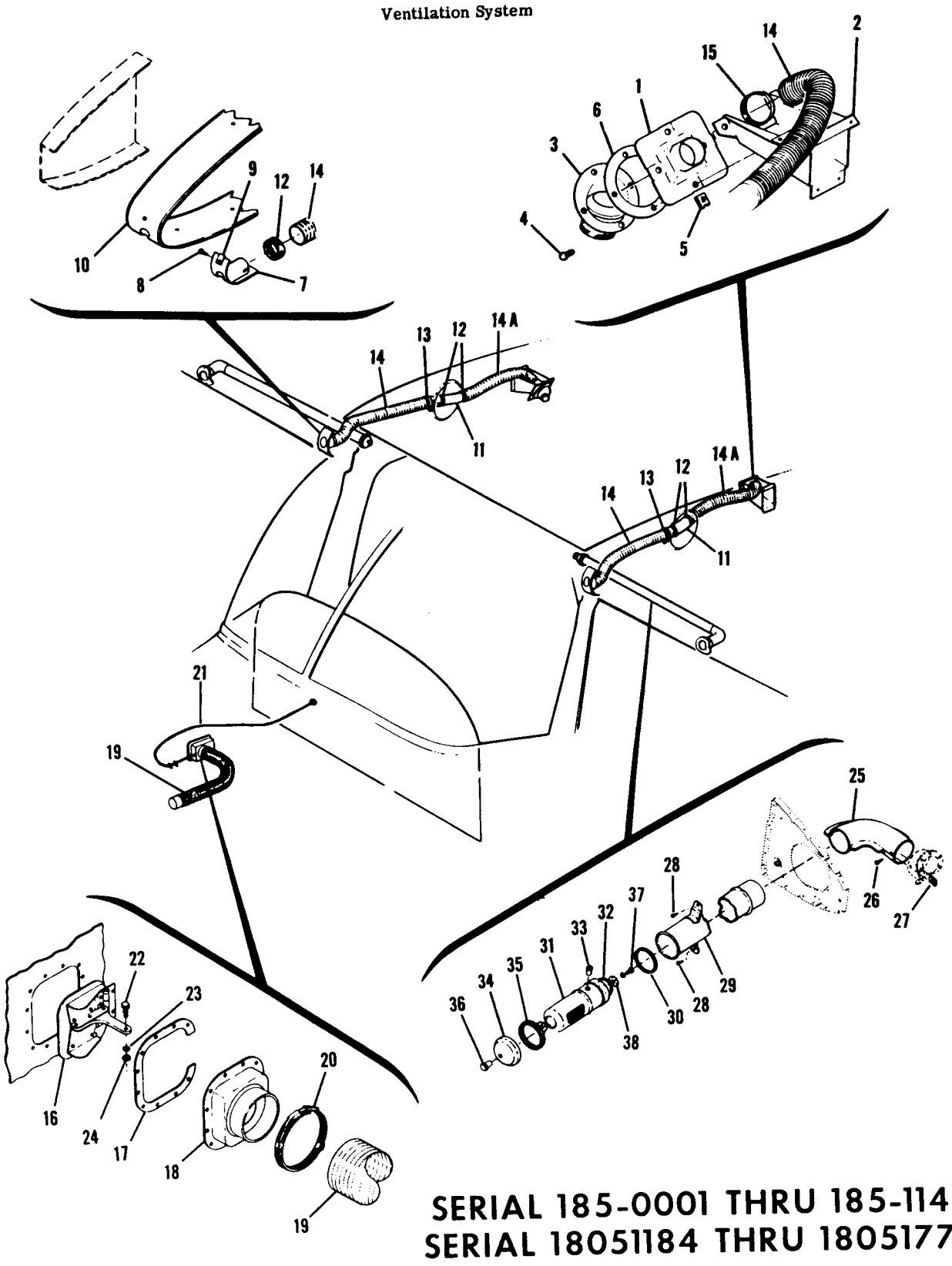

Figure 88. Cabin Ventilation System Installation

FIGURE AND INDEX NO.	PART NUMBER	DESCRIPTION 1 2 3 4 5 6 7	UNITS PER ASSY	USABLE ON CODE
88 -		CABIN VENTILATION SYSTEM	NP	E
- 1	0700327-1	ADAPTER-REAR AIR VENT	2	
- 2	0700326-1	BRACKET ASSEMBLY-REAR AIR VENT	2	
- 3	0813610-3	VALVE-AIR VENT REAR	2	B
	0813610-6	VALVE-AIR VENT REAR WHEN EXHAUSTED USE S1646-1	2	C
	S1646-1	VALVE-AIR VENT REAR	2	D
		ATTACHING PARTS		
- 4	S1021Z6-8C	SCREW	4	
- 5	A1793-6Z3	NUT	4	
- 6	1213043-1	GASKET	1	
		---*---		
- 7	0700325-2	ADAPTER-REAR AIR VENT	2	
- 8	S1022Z8-8	SCREW	2	
- 9	NAS396-6-3	NUT	2	
-10	0700322-4	SEAL-AIR VENT	2	
-11	0700626-1	TUBE-REAR AIR VENT	2	
		ATTACHING PARTS		
-12	NAS397-18	CLAMP	1	
-13	AN742D16	CLAMP TIN	1	
	NAS446-4-3	NUT	1	
	S1021Z8-8	SCREW	1	
		---*---		
-14	S1053E8T	HOSE-18.5 IN LG BULK ITEM REF S1053E8T18.5	2	
-14A	S1053E8T	HOSE-21.5 IN LG BULK ITEM REF S1053E8T21.50	2	
		ATTACHING PARTS		
-15	NAS397-18	CLAMP	2	
		---*---		
-16	0713135-2	DOOR ASSEMBLY-SIDE AIR VENT	1	
-17	0713140-1	SEAL	1	
-18	0713139-1	INLET ASSEMBLY-SIDE AIR VENT	1	
-19	S1053E24T	HOSE-14.0 IN LG BULK ITEM REF S-1053E24T14.0	1	
		ATTACHING PARTS		
-20	NAS398-50	CLAMP TIN	2	
		---*---		
-21	S1239-25	CONTROL-SIDE AIR VENT REF 0713302-10 & S1239-6	1	
		ATTACHING PARTS		
-22	0450311-5	CLAMP	1	
-23	AN960-10L	WASHER	1	
-24	MS21044N3	NUT	1	
		---*---		
-25	0450314	ELBOW ASSEMBLY-CABIN VENTILATION FORWARD	2	
		ATTACHING PARTS		
-26	S1021Z8-8	SCREW	1	
-27	NAS446-4-3	NUT	1	
		---*---		
	0413163-25 **	OUTLET ASSEMBLY-RH LESS KNOB	1	
	0413163-26 **	OUTLET ASSEMBLY-LH LESS KNOB	1	
		ATTACHING PARTS		
-28	S1021Z8-6	SCREW	2	
		---*---		
-29	0413163-17	TUBE ASSEMBLY-LH	1	
	0413163-16	TUBE ASSEMBLY-RH	1	
-30	0413163-7	SEAL-FELT	1	
-31	0413163-18 **	OUTLET-CABIN VENTILATION	1	
-32	0413163-5	SEAL	1	
-33	S2024-1	CATCH-BULLET	1	
-34	0413163-11	CAP ASSEMBLY-OUTLET	1	
-35	S1441-2-5.56	SEAL-CAP	1	
-36	0713303-2	KNOB-CAP	1	
		ATTACHING PARTS		
-37	AN515-8R8	SCREW	1	
-38	0413228 *	WASHER	1	
	0413347-1 *	WASHER	1	
	NAS43DD3-5	SPACER	1	A
		---*---		
		NOTE. **WHEN ORDERING THIS PART FOR AIRCRAFT PRIOR TO SERIAL 185-0311 ALSO ORDER PARTS MARKED *.		
		A---SERIAL 185-0001 THRU 185-1149		
		B---SERIAL 185-0001 THRU 185-0512		
		C---SERIAL 185-0513 THRU 185-0963		
		SERIAL 18051184 THRU 18051618		
		D---SERIAL 185-0964 THRU 185-1149		
		SERIAL 18051619 THRU 18051774		
		E---SERIAL 185-0001 THRU 185-1149		
		SERIAL 18051184 THRU 18051774		

Ventilation System (Cont)

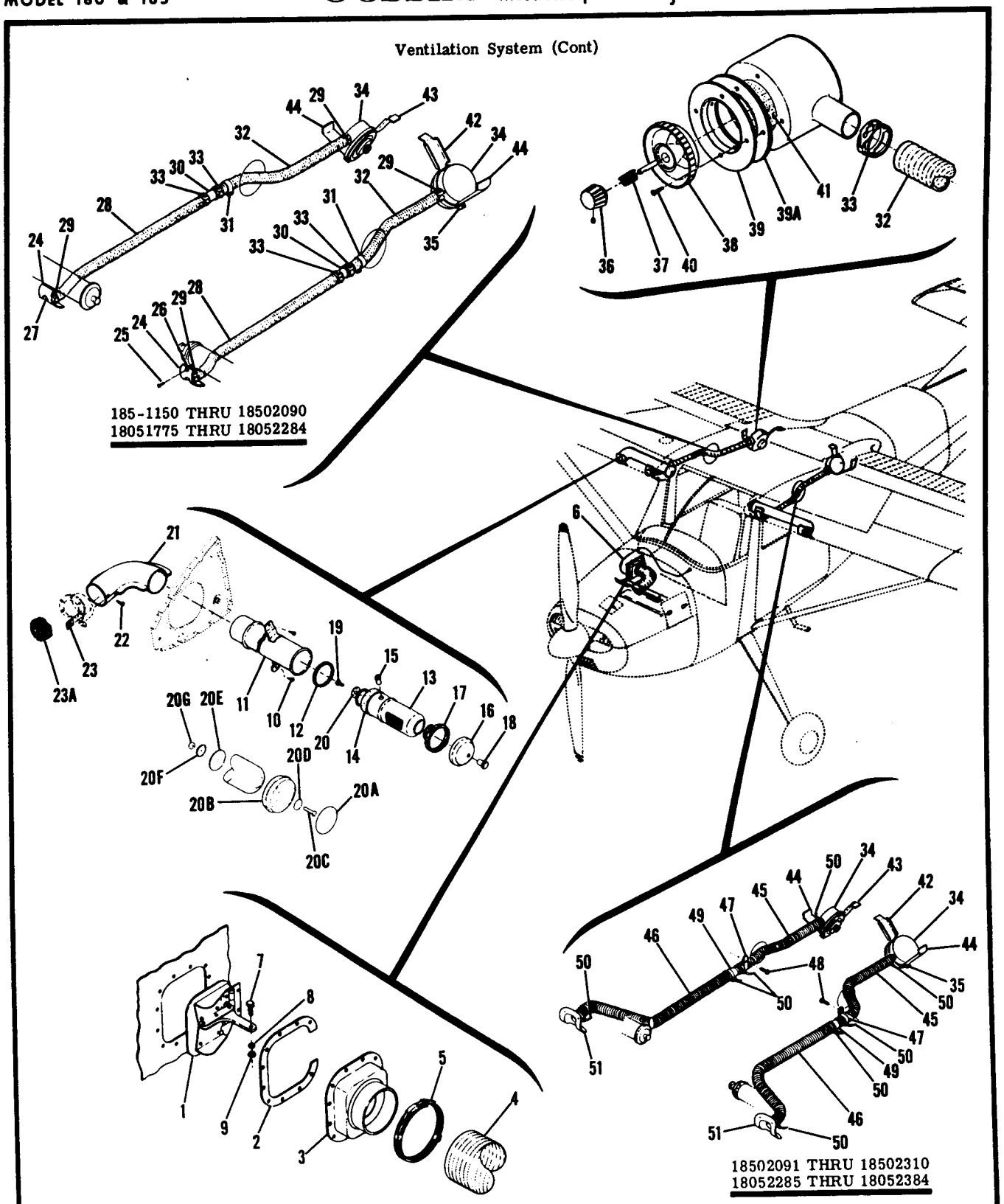

SERIAL 185-1150 THRU 18502310
SERIAL 18051775 THRU 18052384

Figure 88A. Cabin Ventilation System Installation

FIGURE AND INDEX NO.	PART NUMBER	DESCRIPTION 1 2 3 4 5 6 7	UNITS PER ASSY	USABLE ON CODE
88A-		CABIN VENTILATION SYSTEM INSTALLATION	NP	A
- 1	0713135-2	DOOR ASSEMBLY-SIDE AIR VENT	1	
- 2	0713140-1	SEAL-SIDE AIR VENT	1	
- 3	0713139-1	INLET ASSEMBLY-SIDE AIR VENT	1	
- 4	S1053E24T	HOSE-14.0 IN LG BULK ITEM REF S-1053E24T14.0		
		ATTACHING PARTS	2	
- 5	NAS398-50	CLAMP TIN		
		---*---	1	B
- 6	S1239-25	CONTROL-SIDE AIR VENT	1	H
	S1239-37	CONTROL-SIDE AIR VENT	1	J
	S1239-46	CONTROL-SIDE AIR VENT		
		ATTACHING PARTS	1	
- 7	0450311-5	CLAMP	1	
- 8	AN960-10L	WASHER	1	
- 9	MS21044N3	NUT		
		---*---	1	D
	0413163-26	OUTLET ASSEMBLY-LH LESS KNOB	1	N
	0413163-205	OUTLET ASSEMBLY-LH LESS CAP & KNOB	1	L
	0413163-203	OUTLET ASSEMBLY-LH LESS CAP & KNOB	1	D
	0413163-25	OUTLET ASSEMBLY-RH LESS KNOB	1	N
	0413163-206	OUTLET ASSEMBLY-RH LESS CAP & KNOB	1	L
	0413163-204	OUTLET ASSEMBLY-RH LESS CAP & KNOB		
		ATTACHING PARTS	2	
-10	S1021Z8-6	SCREW		
		---*---	1	K
-11	0413163-17	TUBE ASSEMBLY-LH	1	L
	0413163-27	TUBE ASSEMBLY-LH	1	K
	0413163-16	TUBE ASSEMBLY-RH	1	L
	0413163-28	TUBE ASSEMBLY-RH	1	
-12	0413163-7	SEAL FELT	1	
-13	0413163-18	OUTLET ASSEMBLY-CABIN VENTILATION	1	
-14	0413163-5	SEAL FELT	2	
-15	0413203	CATCH-OUTLET WEU S2024-1	2	
	S2024-1	CATCH-OUTLET	1	D
-16	0413163-11	CAP ASSEMBLY-OUTLET	1	D
-17	S1441-2-5.56	SEAL-CAP	2	D
-18	0713303-2	KNOB-OUTLET ASSEMBLY CAP		
		ATTACHING PARTS	1	D
-19	AN515-8R8	SCREW	1	D
-20	0413228	WASHER	1	D
	0413347-1	WASHER	1	D
	NAS43DD3-5	SPACER		
		---*---	2	E
-20A	S1780-8	INSERT	2	E
-20B	S1834-1	KNOB		
		ATTACHING PARTS	1	E
-20C	AN507-1032R12	SCREW	1	E
-20D	S290D1032	WASHER	1	E
-20E	S1450-5A24-040	WASHER	1	E
-20F	0413228	WASHER	1	E
-20G	MS21044N3	NUT		
		---*---	2	K
-21	0450314	ELBOW ASSEMBLY-FORWARD CABIN VENTILATION	2	L
	0450314-1	ELBOW ASSEMBLY-FORWARD CABIN VENTILATION		
		ATTACHING PARTS	1	
-22	S1021Z8-8	SCREW	1	
-23	NAS446-4-3	NUT		
		---*---	2	M
-23A	1200018-1	ELEMENT-AIR FILTER	2	M
	1200018-2	ELEMENT-AIR FILTER ALTERNATE	2	K
-24	0700325-2	ADAPTOR ASSEMBLY-REAR AIR VENT		
		ATTACHING PARTS	2	K
-25	S1022Z8-8	SCREW	2	K
-26	NAS396-6-3	NUT		
		---*---	2	K
-27	0700322-4	SEAL-AIR VENT	2	F
-28	S1053E8T	DUCT-18.50 IN LG BULK ITEM REF S1053E8T-18.5	2	G
	0700322-9	TUBE-AIR VENT	4	K
-29	NAS397-18	CLAMP TIN	2	F
-30	0700626-1	TUBE-REAR AIR VENT		

CONTINUED ON NEXT PAGE

FIGURE AND INDEX NO.	PART NUMBER	DESCRIPTION 1 2 3 4 5 6 7	UNITS PER ASSY	USABLE ON CODE
88A-31	AN742D16	CLAMP TIN	2	K
		ATTACHING PARTS		
	S1021Z8-10	SCREW	2	K
	NAS395-19-3	NUT	2	K
		---*---		
-32	S1053E8T	DUCT-16.00 IN LG BULK ITEM REF S1053E8T-16.00	2	F
-33	NAS397-18	CLAMP	4	F
-34	0710013-5	SILENCER ASSEMBLY-REAR AIR VENT	2	
		ATTACHING PARTS		
-35	AN515-8R10	SCREW	1	
	AN960-8	WASHER	2	
	NAS679A08	NUT	1	
		---*---		
-36	S1728-1	KNOB	1	
-37	0710015-13	SPRING	1	
-38	0713250-1	KNOB	1	
-39	0710014-8	ESCUTCHEON	1	
-39A	0710022-2	GASKET	1	
		ATTACHING PARTS		
-40	S1023A6-6C	SCREW	4	
		---*---		
-41	0710015-6	INSULATOR	1	
-42	0710014-3	BRACKET ASSEMBLY-LH	1	
-43	0710014-[illegible]	BRACKET ASSEMBLY-RH	1	
-44	0700322-8	BRACKET	2	
-45	S1053E8T	DUCT-16.0 IN LG BKI REF S1053E8T16.00	2	L
-46	S1053E10T	DUCT-31.0 IN LG BKI REF S1053E10T31.00	2	L
-47	S1485D17U	CLAMP	2	L
		ATTACHING PARTS		
-48	S1021Z8-10	SCREW	1	L
		---*---		
-49	1200691-1	DRAIN FITTING-REAR SEAT VENT	2	L
-50	S1693-2	STA STRAP	8	L
-51	1200637-5	ADAPTOR ASSEMBLY-REAR SEAT VENT	2	L

A---SERIAL 185-1150 THRU 18502310
SERIAL 18051775 THRU 18052384
B---SERIAL 185-1150 THRU 185-1300
SERIAL 18051775 THRU 18051875
C---SERIAL 185-1301 THRU 18502310
SERIAL 18051876 THRU 18052384
D---SERIAL 185-1150 THRU 185-1447
SERIAL 18051775 THRU 18051993
E---SERIAL 185-1448 THRU 18502310
SERIAL 18051994 THRU 18052384
F---SERIAL 185-1150 THRU 185-1455
SERIAL 18051775 THRU 18051999
G---SERIAL 185-1456 THRU 18502090
SERIAL 18052000 THRU 18052284
H---SERIAL 185-1301 THRU 185-1599
SERIAL 18051876 THRU 18052103
J---SERIAL 18501600 THRU 18502310
SERIAL 18052104 THRU 18052384
K---SERIAL 185-1150 THRU 18502090
SERIAL 18051775 THRU 18052284
L---SERIAL 18502091 THRU 18502310
SERIAL 18052285 THRU 18052384
M---SERIAL 18501985 THRU 18502310
SERIAL 18052242 THRU 18052384
N---SERIAL 185-1448 THRU 18502090
SERIAL 18051994 THRU 18052284

Heating System

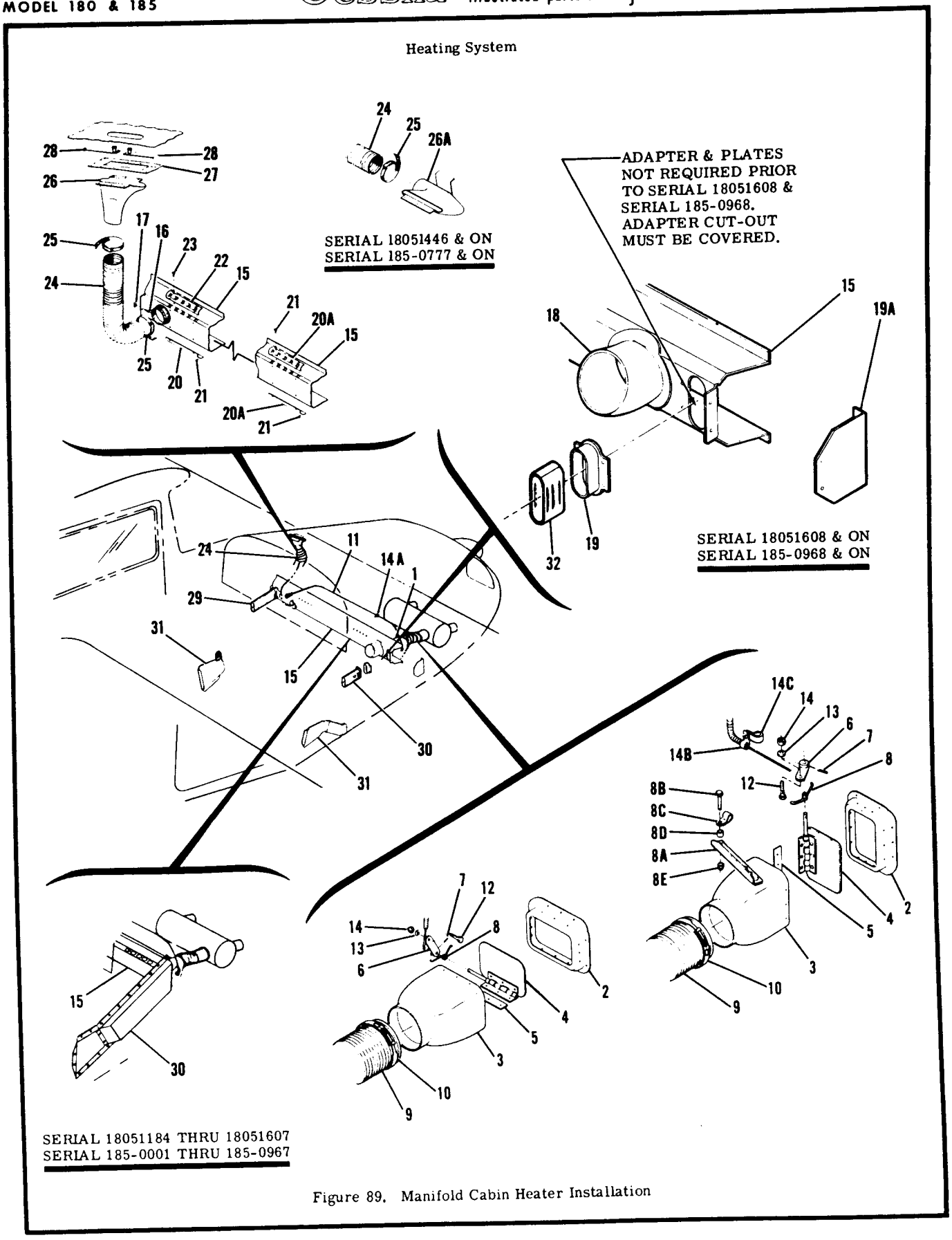

Figure 89. Manifold Cabin Heater Installation

FIGURE AND INDEX NO.	PART NUMBER	DESCRIPTION 1 2 3 4 5 6 7	UNITS PER ASSY	USABLE ON CODE
89 -		CABIN HEATER INSTALLATION-MANIFOLD	NP	
- 1	0753011-1	VALVE ASSEMBLY-WARM AIR	1	Q
	0753011-3	VALVE ASSEMBLY-WARM AIR	1	S
- 2	0753010-1	SEAT-WARM AIR VALVE	1	
- 3	1253032-1	BODY ASSEMBLY-VALVE	1	Q
	1253032-4	BODY ASSEMBLY-VALVE	1	S
- 4	1253034-1	PLATE ASSEMBLY-VALVE	1	
- 5	1253040-1	SHIM	1	
	1253033-2	REINFORCEMENT	1	
- 6	1253037-1	ARM-CONTROL		
		ATTACHING PARTS	1	
- 7	NAS561C2-8	ROLL PIN	1	
- 8	1253041-1	SPRING-WARM AIR VALVE		
		---*---	1	S
- 8A	0713295-1	SUPPORT	1	S
	0713953-1	REINFORCEMENT	1	S
- 8B	AN3-5A	BOLT	1	S
- 8C	AN742D3	CLAMP	1	S
- 8D	NAS43DD3-16	SPACER	1	S
- 8E	MS21044N3	NUT	1	
- 9	S1053K24T	HOSE-26.0 IN. LG. BULK ITEM REF S-1053K24T26.0		
		ATTACHING PARTS	1	
-10	NAS397-50-1	CLAMP		
		---*---	1	E
-11	S1241-7	CONTROL-CABIN HEAT	1	K
	S1241-3	CONTROL-CABIN HEAT	1	N
	S1239-31	CONTROL-CABIN HEAT	1	P
	S1239-48	CONTROL-CABIN HEAT		
		ATTACHING PARTS	1	
-12	0450311-5	CLAMP	1	
-13	AN960-10L	WASHER	1	
-14	MS21044N3	NUT	1	
	AN742D3	CLAMP	1	G
-14A	S1485D4U	CLAMP	1	G
	S1021Z8-8	SCREW	1	G
	NAS446-4-3	NUT	1	R
-14B	AN742D3	CLAMP	1	R
-14C	AN742D12	CLAMP	1	R
	AN520-10R8	SCREW	1	R
	MS21044N3	NUT		
		---*---	1	D
-15	0713019-102	DUCT ASSEMBLY-CABIN HEATER	1	C
	0713019-105	DUCT ASSEMBLY-CABIN HEATER	1	T
	0713322-1	DUCT ASSEMBLY-CABIN HEATER		
		ATTACHING PARTS	2	
-16	S1021Z8-8	SCREW	2	
-17	NAS395-14-3	NUT		
		---*---	1	
-18	0713133-3	UNION-COLD AIR	1	C
	0713505-1	BRACKET	1	T
	0713761-1	BRACKET	2	G
-19	1253031-3	ADAPTER	2	G
-19A	0713246-1	END PLATE	1	
-20	0713019-86	RETAINER-UPHOLSTERY	2	U
-20A	0713019-86	RETAINER-UPHOLSTERY	2	T
	0713322-6	RETAINER-UPHOLSTERY		
		ATTACHING PARTS	4	
-21	S1021Z8-8	SCREW		
		---*---	1	
-22	0713019-91	RETAINER-UPHOLSTERY		
		ATTACHING PARTS	4	
-23	S1021Z8-8	SCREW		
		---*---	1	E
-24	S1053E16T	HOSE-24.0 IN LG BKI REF S1053E16T24.0	1	F
	S1053E16T	HOSE-32.0 IN LG BULK ITEM REF S1053E16T32.0		
		ATTACHING PARTS	2	
-25	NAS397-32	CLAMP		
		---*---	1	E
-26	0713003-45	NOZZLE	1	H
-26A	0513345-4	NOZZLE ASSEMBLY WHEN EXHAUSTED USE 0513386-1	1	J
	0513386-1	NOZZLE ASSEMBLY	1	
-27	0713019-7	VALVE GUIDE-DEFROST		

CONTINUED ON NEXT PAGE

FIGURE AND INDEX NO.	PART NUMBER	DESCRIPTION 1 2 3 4 5 6 7	UNITS PER ASSY	USABLE ON CODE
89 -28	0713019-94	VALVE ASSEMBLY-DEFROST	2	
	0713303-2	KNOB-DEFROST VALVE	1	M
	S1760-1	KNOB-DEFROST VALVE	1	L
	S1760-7	KNOB-DEFROST VALVE	1	W
		ATTACHING PARTS		
	AN515-8R4	SCREW	1	
	AN936A8	WASHER	1	
		---*---		
-29	0713164-1 #	DUCT ASSEMBLY-CABIN HEAT LH	1	A
	S1110ET	DUCT-CABIN LH * IN LG BULK ITEM REF S1110ET-*	1	G
-30	0713164-4	DUCT ASSEMBLY-CABIN HEAT RH 180 ONLY	1	B
	0713164-2 #	DUCT ASSEMBLY-CABIN HEAT RH	1	V
	S1110ET	DUCT-CABIN RH * IN LG BULK ITEM REF S1110ET-*	1	G
		ATTACHING PARTS		
	S1021Z8-8	SCREW	8	
	S10268G	CLAMP-10.90 IN LG BULK ITEM REF S10268G10.90X	2	G
		---*---		
-31	0513309-1	OUTLET ASSEMBLY-HEATER DUCT	2	G
		ATTACHING PARTS		
	S1021Z6-6	SCREW	4	G
		---*---		
-32	0513238-1	UNION	2	G

NOTE. *HOSE LENGTH TO BE ADDED LATER

NOTE. #HEATER DUCTS ARE INCLUDED WITH UPHOLSTERY SIDE PANEL ON THE DELUXE MODEL SERIAL 185-0001 THRU 185-0237, SEE FIGURE 57.

A---SERIAL 185-0001 THRU 185-0967
SERIAL 18051184 THRU 18051607
B---SERIAL 18051184 THRU 18051312
C---SERIAL 185-0001 THRU 18502007, 18502026, 18502027
SERIAL 18051313 THRU 18052384
D---SERIAL 18051184 THRU 18051312
E---SERIAL 185-0001 THRU 185-0776
SERIAL 18051184 THRU 18051445
F---SERIAL 185-0777 THRU 1850231
SERIAL 18051446 THRU 18052384
G---SERIAL 185-0968 THRU 18502310
SERIAL 18051608 THRU 18052384
H---SERIAL 185-0777 THRU 185-0912
SERIAL 18051446 THRU 18051552
J---SERIAL 185-0913 THRU 18502310
SERIAL 18051553 THRU 18052384
K---SERIAL 185-0777 THRU 185-1300
SERIAL 18051446 THRU 18051875
L---SERIAL 185-1301 THRU 18502234
SERIAL 18051876 THRU 18052346
M---SERIAL 185-0001 THRU 185-1300
SERIAL 18051184 THRU 18051875
N---SERIAL 185-1301 THRU 185-1599
SERIAL 18051876 THRU 18052103
P---SERIAL 18501600 THRU 18502310
SERIAL 18052104 THRU 18052384
Q---SERIAL 185-0001 THRU 185-1583
SERIAL 18051184 THRU 18052093
R---SERIAL 185-1301 THRU 185-1583
SERIAL 18051876 THRU 18052093
S---SERIAL 185-1584 THRU 18502310
SERIAL 18052094 THRU 18052384
T---SERIAL 18502008 THRU 18502025
18502028 THRU 18502310
U---SERIAL 185-0001 THRU 18502007, 18502026, 18502027
SERIAL 18051184 THRU 18052384
V---SERIAL 185-0001 THRU 185-0967
SERIAL 18051313 THRU 18051607
W---SERIAL 18502235 THRU 18502310
SERIAL 18052347 THRU 18052384

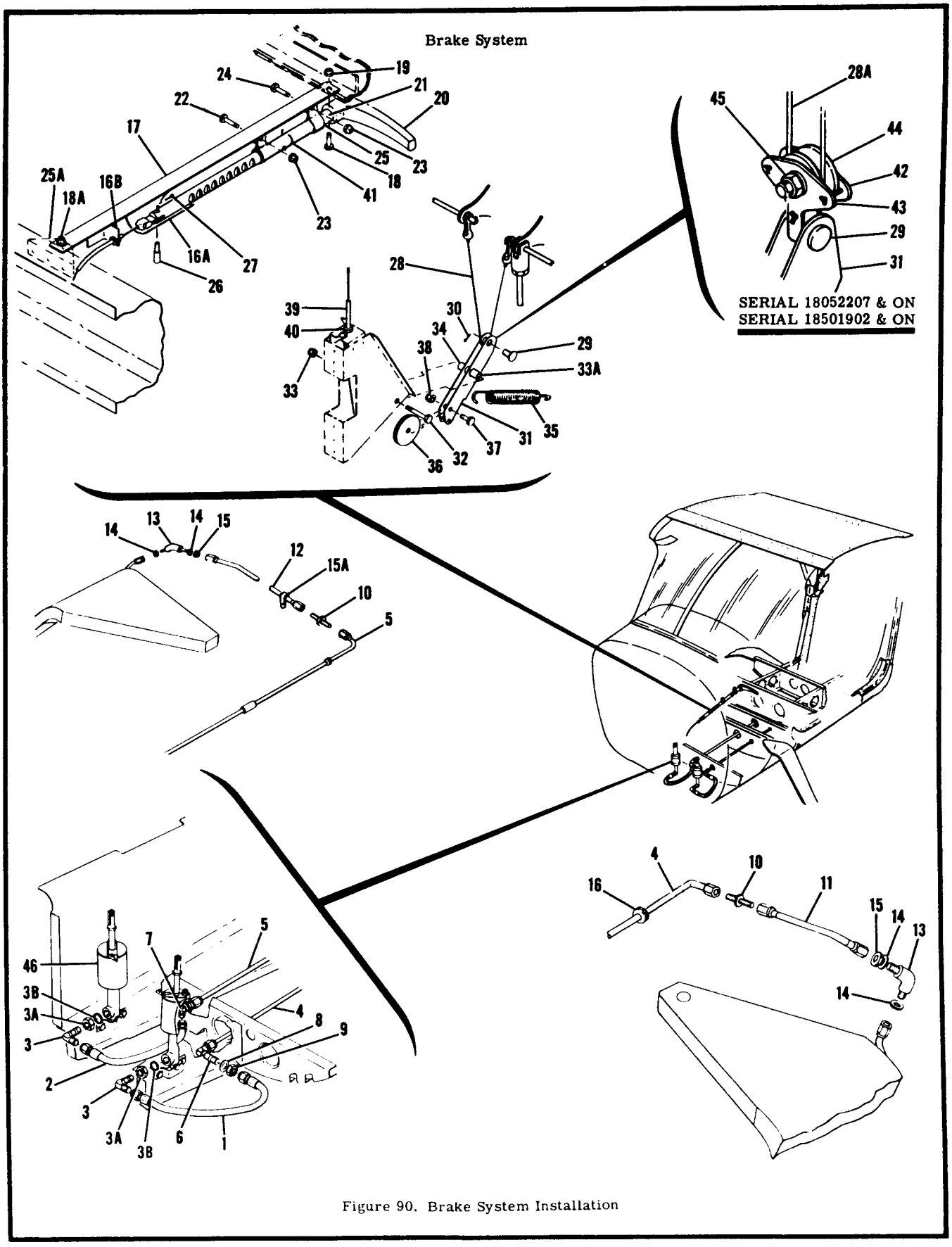

Figure 90. Brake System Installation

FIGURE AND INDEX NO.	PART NUMBER	DESCRIPTION 1 2 3 4 5 6 7	UNITS PER ASSY	USABLE ON CODE
90 -		BRAKE SYSTEM INSTALLATION	NP	
- 1	S1167-4-0100	HOSE ASSEMBLY-MASTER CYLINDER TO ELBOW LH	1	D
	S1167-3-0100	HOSE ASSEMBLY-MASTER CYLINDER TO ELBOW LH	1	E
- 2	S1167-4-0080	HOSE ASSEMBLY-MASTER CYLINDER TO ELBOW RH	1	D
	S1167-3-0080	HOSE ASSEMBLY-MASTER CYLINDER TO ELBOW RH WEU S1167-3-0085 -	1	H
	S1167-3-0085	HOSE ASSEMBLY-MASTER CYLINDER TO ELBOW RH	1	J
		ATTACHING PARTS		
- 3	AN921-4D	ELBOW	1	D
	AN921-3D	ELBOW	1	E
- 3A	AN924-4D	NUT	1	D
	AN924-3D	NUT	1	E
- 3B	MS28778-4	GASKET	1	D
	MS28778-3	GASKET	1	E
		---*---		
- 4	0500106-35	LINE ASSEMBLY-BRAKE LH	1	D
	0700147-19	LINE ASSEMBLY-BRAKE LH WHEN EXHAUSTED USE 0700147-39	1	F
	0700147-39	LINE ASSEMBLY-BRAKE LH	1	G
- 5	0500106-14	LINE ASSEMBLY-BRAKE RH	1	D
	0700147-20	LINE ASSEMBLY-BRAKE RH WHEN EXHAUSTED USE 0700147-40	1	F
	0700147-40	LINE ASSEMBLY-BRAKE RH	1	G
		ATTACHING PARTS		
- 6	AN833-4D	ELBOW-LH	1	D
	AN833-3D	ELBOW-LH	1	E
- 7	AN837-4D	ELBOW-RH	1	D
	AN837-3D	ELBOW RH	1	E
- 8	AN960-716L	WASHER	1	D
	AN960-616L	WASHER	1	E
- 9	AN924-4D	NUT	1	D
	AN924-3D	NUT	1	E
-10	AN815-4D	UNION	1	D
	AN815-3D	UNION	1	E
		---*---		
-11	0500106-12	LINE ASSEMBLY-BRAKE LH	1	D
	0700147-21	LINE ASSEMBLY-BRAKE LH WHEN EXHAUSTED USE 0700147-41	1	F
	0700147-41	LINE ASSEMBLY-BRAKE LH	1	G
-12	0500106-13	LINE ASSEMBLY-BRAKE RH	1	D
	0700147-22	LINE ASSEMBLY-BRAKE RH WHEN EXHAUSTED USE 0700147-42	1	F
	0700147-42	LINE ASSEMBLY-BRAKE RH	1	G
		ATTACHING PARTS		
-13	AN833-4D	ELBOW	1	D
	AN833-3D	ELBOW	1	E
-14	AN960-716L	WASHER	2	D
	AN960-616L	WASHER	2	E
-15	AN924-4D	NUT	1	D
	AN924-3D	NUT	1	E
		---*---		
-15A	AN742D3	CLAMP	1	E
		ATTACHING PARTS		
	AN515-8R22	SCREW	1	E
	NAS43DD3-56	SPACER	1	E
	NAS679A08	NUT	1	E
		---*---		
-16	MS35489-7	GROMMET	2	D
	MS35489-5	GROMMET LH SIDE ONLY	1	E
-16A	0713070-4	PARKING BRAKE INSTALLATION	NP	
-16B	0713070-5	RACK-POSITIONING	1	
-17	0713070-33	ANGLE-PARKING BRAKE	1	
	0713070-23	ANGLE-PARKING BRAKE	1	A
		ANGLE-PARKING BRAKE	1	B
		ATTACHING PARTS		
-18	AN3-6A	BOLT	1	A
	AN3-5A	BOLT	1	K
	AN3-7A	BOLT	1	L
	NAS43DD3-16	SPACER	1	A
	NAS43DD3-23	SPACER BETWEEN INSTRUMENT PANEL & ANGLE	1	L
-18A	AN3-3A	BOLT	1	
-19	MS21044N3	NUT	2	
		---*---		
-20	0813150-55	HANDLE ASSEMBLY-PARKING BRAKE	1	
	0811490-6	HANDLE-PARKING BRAKE	1	
	0813150-54	TUBE-PARKING BRAKE	1	
	NAS561-5-12	ROLL PIN	1	

CONTINUED ON NEXT PAGE

FIGURE AND INDEX NO.	PART NUMBER	DESCRIPTION 1 2 3 4 5 6 7	UNITS PER ASSY	USABLE ON CODE
90 -21	0813156-4	HOUSING ASSEMBLY-HANDLE	1	
		ATTACHING PARTS		
-22	AN3-6A	BOLT	1	
	0713070-15	SPACER	1	
-23	MS21044N3	NUT	2	
-24	AN3-6A	BOLT	1	
	0713070-32	SPACER BETWEEN CLAMP & ANGLE	1	
-25	0713070-25	CLAMP	1	
	AN960C10L	WASHER BETWEEN EARS OF CLAMP	1	
	AN960C10	WASHER BETWEEN EARS OF CLAMP	1	
		---*---		
-25A	0713070-12	ANGLE-PARKING BRAKE	1	A
	0713761-1	ANGLE-PARKING BRAKE	1	B
-26	0713070-6	PIN-POSITIONING	1	
-27	MS24665-132	PIN-COTTER	1	
-28	0510105-70	CABLE ASSEMBLY	1	M
-28A	0510105-232	CABLE ASSEMBLY	1	N
-29	MS20392-4C13	PIN	1	
-30	MS24665-281	PIN-COTTER	1	
-31	0713070-9	BELLCRANK ASSEMBLY	1	
		ATTACHING PARTS		
-32	AN3-13A	BOLT	1	
-33	MS21044N3	NUT	1	
-33A	0713070-19	SPACER INSIDE OF 0713070-11 BUSHING	1	
		---*---		
-34	0713070-11	BUSHING-BELLCRANK	1	
-35	0713063	SPRING-PARKING BRAKE	1	
-36	S378-1L	PULLEY	1	
		ATTACHING PARTS		
-37	AN3-5A	BOLT	1	
-38	MS21044N3	NUT	1	
		---*---		
-39	0713070-28	TUBE ASSEMBLY INCLUDES CABLE	1	A
	0713070-31	TUBE ASSEMBLY INCLUDES CABLE STAINLESS STEEL	1	A
	0713070-16	TUBE ASSEMBLY INCLUDES CABLE	1	B
-40	AN315-3R	NUT	4	
-41	0713070-24	CATCH-PARKING BRAKE	1	
		ATTACHING PARTS		
	AN960-4	WASHER	1	
		---*---		
-42	0713959-4	BRACKET ASSEMBLY	1	N
-43	MS24665-134	COTTER PIN	3	N
-44	S1710-1	PULLEY	1	N
		ATTACHING PARTS		
-45	AN3-6A	BOLTS	1	N
	0411783	BUSHING	1	N
	AN960-10L	WASHER	1	N
	MS21044N3	NUT	1	N
		---*---		
-46		MASTER BRAKE CYLINDER ASSEMBLY SEE FIGURE 93	1	
		A---SERIAL 18051184 THRU 18051445		
		SERIAL 185-0001 THRU 185-0776		
		B---SERIAL 18051446 THRU 18052384		
		SERIAL 185-0777 THRU 18502310		
		D---SERIAL 18051184 THRU 18051909		
		SERIAL 185-0001 THRU 185-1341		
		E---SERIAL 18051910 THRU 18052384		
		SERIAL 185-1342 THRU 18502310		
		F---SERIAL 18051910 THRU 18052076		
		SERIAL 185-1342 THRU 185-1539		
		G---SERIAL 18052077 THRU 18052384		
		SERIAL 185-1540 THRU 18502310		
		H---SERIAL 18051910 THRU 18052177		
		SERIAL 185-1342 THRU 18501812		
		J---SERIAL 18052178 THRU 18052384		
		SERIAL 18501813 THRU 18502310		
		K---SERIAL 18051446 THRU 18052175		
		SERIAL 185-0777 THRU 18501832		
		L---SERIAL 18052176 THRU 18052384		
		SERIAL 18501833 THRU 18502310		
		M---SERIAL 18051184 THRU 18052206		
		SERIAL 185-0001 THRU 18501901		
		N---SERIAL 18052207 THRU 18052384		
		SERIAL 18501902 THRU 18502310		

Flight Controls

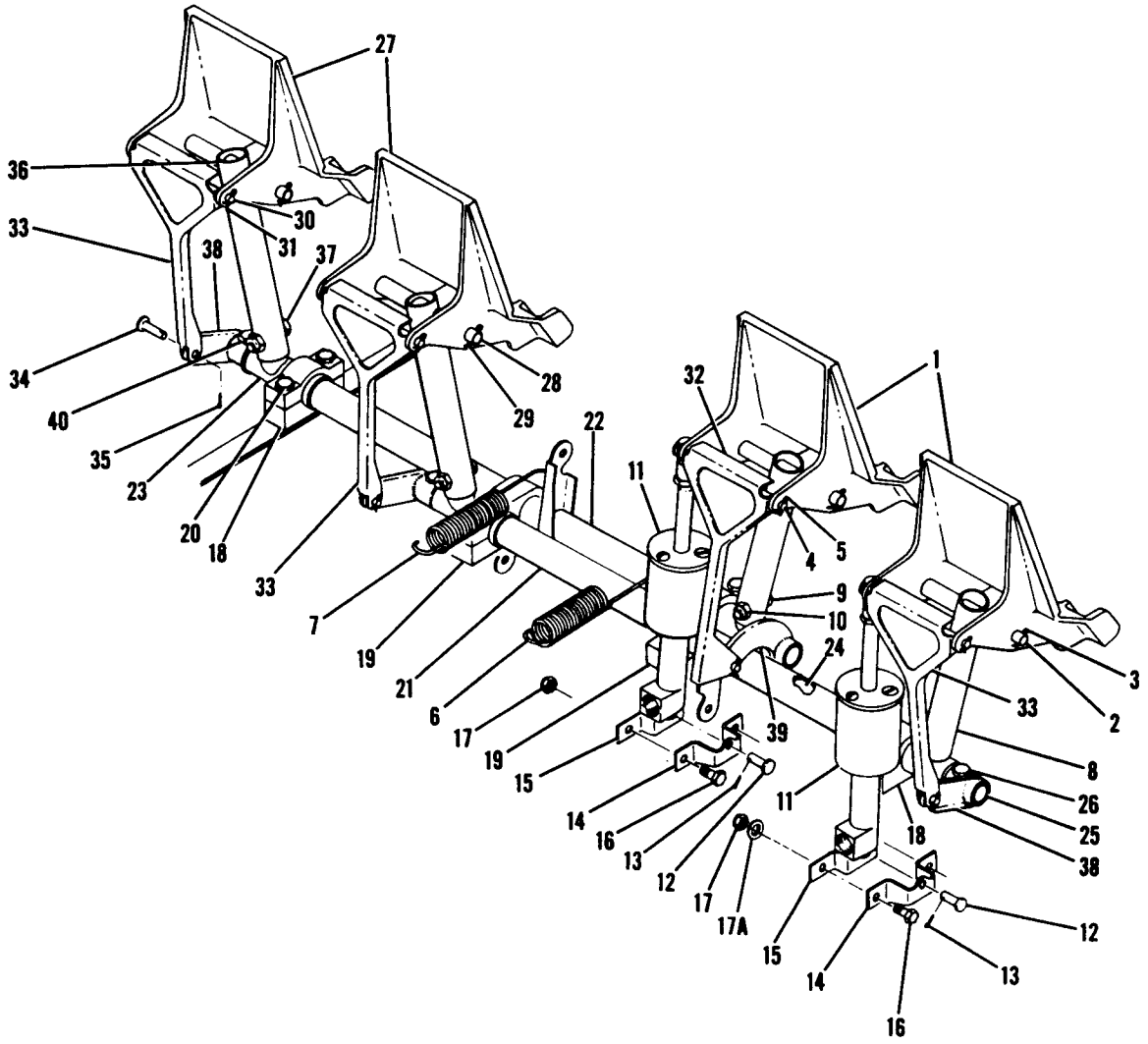

SERIAL 18051184 THRU 18051312

Figure 91. Rudder and Brake Pedal Installation

FIGURE AND INDEX NO.	PART NUMBER	DESCRIPTION 1 2 3 4 5 6 7	UNITS PER ASSY	USABLE ON CODE
91 -		PEDAL INSTALLATION-BRAKE & RUDDER LH	NP	A
- 1	1460320-1	PEDAL-BRAKE & RUDDER	2	
		ATTACHING PARTS		
- 2	1460501-21	SHAFT	1	
- 3	MS24665-285	PIN-COTTER	2	
- 4	0411778-2	SHAFT	1	
- 5	MS24665-132	PIN-COTTER	2	
		---*---		
- 6	0310196-5	SPRING-BRAKE & RUDDER RETURN LH	1	
- 7	0310196-12	SPRING-BRAKE & RUDDER RETURN RH	1	
- 8	0411307	ARM-RUDDER BAR	2	
		ATTACHING PARTS		
- 9	AN3-11A	BOLT	1	
-10	MS21044N3	NUT	1	
		---*---		
-11	0541138-16	MASTER CYLINDER ASSEMBLY-BRAKE SEE FIGURE 93	2	
		ATTACHING PARTS		
-12	MS20392-2C15	PIN	1	
-13	MS24665-132	PIN-COTTER	1	
		---*---		
-14	0411550	BRACKET-BRAKE CYLINDER OUTSIDE	2	
-15	0411549	BRACKET-BRAKE CYLINDER INSIDE	2	
		ATTACHING PARTS		
-16	AN3-4A	BOLT	4	
-17	MS21044N3	NUT	4	
-17A	AN960-10L	WASHER	2	
		---*---		
-18	0411263-5	BEARING HALF-UPPER OUTBOARD	2	
	0411263-6	BEARING HALF-LOWER OUTBOARD	2	
-19	0411264-5	BEARING HALF-UPPER INBOARD	2	
	0411264-6	BEARING HALF-LOWER INBOARD	2	
		ATTACHING PARTS		
-20	AN3-14A	BOLT	2	
	AN960-10	WASHER	2	
	MS21044N3	NUT	2	
		---*---		
-21	0411306-5	WELD ASSEMBLY LH LANDPLANE ONLY	1	
	0411306-205	WELD ASSEMBLY LH FLOATPLANE ONLY	1	
-22	0411306-6	WELD ASSEMBLY RH LANDPLANE ONLY	1	
	0411306-206	WELD ASSEMBLY RH FLOATPLANE ONLY	1	
-23	S1003-43A	BEARING	4	
-24	0411565	TUBE-DUAL BRAKE	2	
-25	0411562	HUB-DUAL BRAKE	4	
		ATTACHING PARTS		
-26	AN3-10A	BOLT	1	
	MS21044N3	NUT	1	
		---*---		
		PEDAL INSTALLATION-BRAKE & RUDDER RH	1	
-27	1460320-1	PEDAL-BRAKE & RUDDER	2	
		ATTACHING PARTS		
-28	1460501-21	SHAFT	1	
-29	MS24665-285	PIN-COTTER	2	
-30	0411778-2	SHAFT	1	
-31	MS24665-132	PIN-COTTER	2	
	NAS42HT6-8	SPACER	1	
		---*---		
-32	0411564	LINK-DUAL BRAKES	3	
-33	0411564-3	LINK-DUAL BRAKES	1	
		ATTACHING PARTS		
-34	MS20392-2C15	PIN	1	
-35	MS24665-132	PIN-COTTER	1	
	NAS43HT3-12	SPACER	1	
		---*---		
-36	0411307	ARM-RUDDER BAR	2	
		ATTACHING PARTS		
-37	AN3-11A	BOLT	1	
	MS21044N3	NUT	1	
		---*---		
-38	0411563	BELLCRANK	3	
-39	0411573-1	BELLCRANK	1	
		ATTACHING PARTS		
-40	AN3-10A	BOLT	1	
	MS21044N3	NUT	1	
		---*---		
		A---SERIAL 18051184 THRU 18051312		

Flight Controls (Cont)

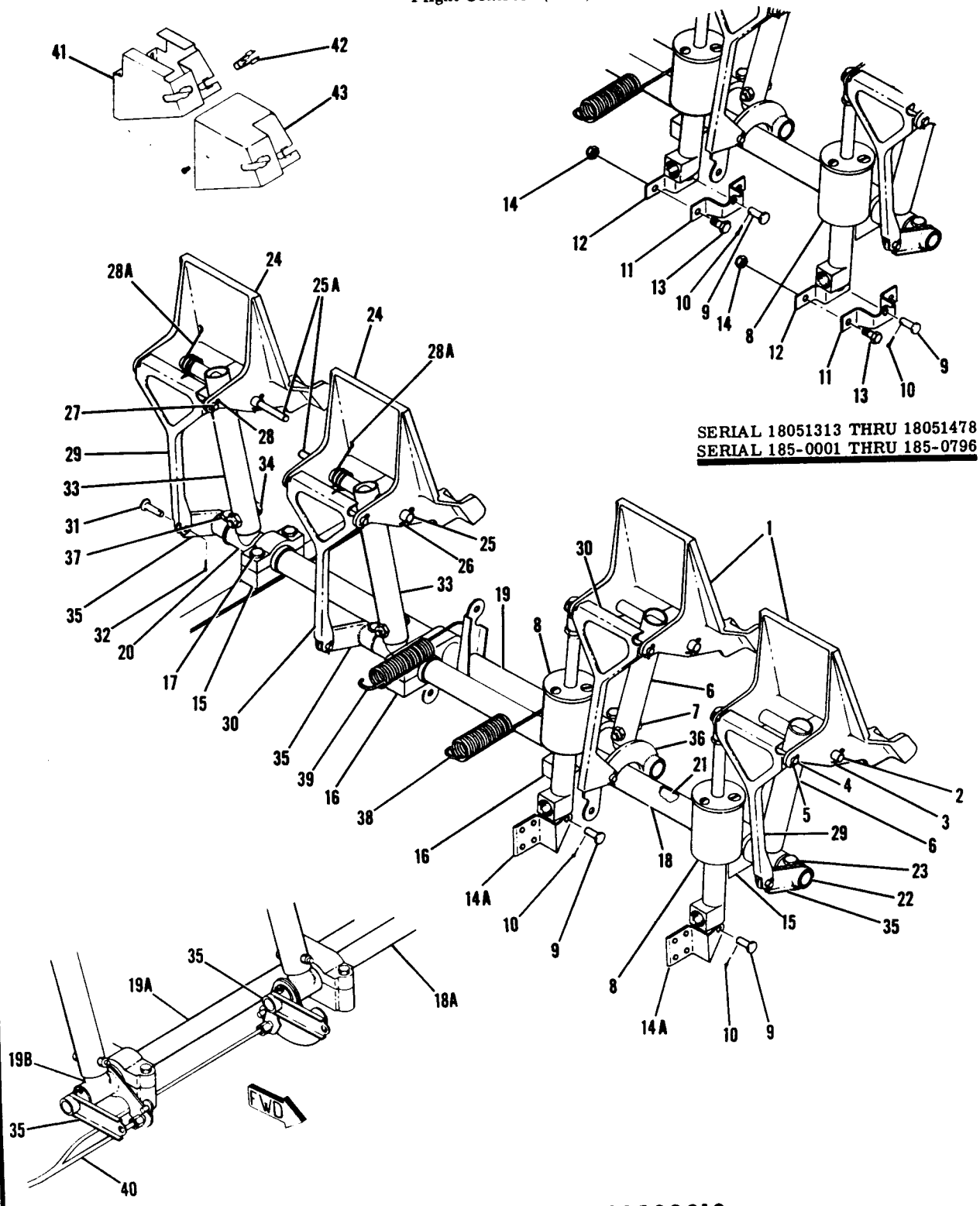

SERIAL 18051313 THRU 18051478
SERIAL 185-0001 THRU 185-0796

SERIAL 185-0001 THRU 18502310
SERIAL 18051313 THRU 18052384

Figure 92. Rudder and Brake Pedal Installation

FIGURE AND INDEX NO.	PART NUMBER	DESCRIPTION 1 2 3 4 5 6 7	UNITS PER ASSY	USABLE ON CODE
92 -		PEDAL INSTALLATION-BRAKE & RUDDER	NP	C
- 1	0310453	PEDAL-BRAKE & RUDDER	2	A
	1460320-1	PEDAL-BRAKE & RUDDER	2	B
		ATTACHING PARTS		
- 2	0411369-2	SHAFT	1	A
	1460501-21	SHAFT	1	B
- 3	MS24665-285	PIN-COTTER	2	
- 4	0411778-3	SHAFT	1	A
	0411778-2	SHAFT	1	B
- 5	MS24665-132	PIN-COTTER	2	
		---*---		
- 6	0411307	ARM-RUDDER BAR	2	
		ATTACHING PARTS		
- 7	AN3-11A	BOLT	1	
	MS21044N3	NUT	1	
		---*---		
- 8		MASTER CYLINDER ASSEMBLY-BRAKE SEE FIGURE 93	2	
		ATTACHING PARTS		
- 9	MS20392-2C15	PIN	1	
-10	MS24665-132	PIN-COTTER	1	
		---*---		
-11	0411550	BRACKET-BRAKE CYLINDER OUTSIDE	2	E
-12	0411549	BRACKET-BRAKE CYLINDER INSIDE	2	E
		ATTACHING PARTS		
-13	AN3-4A	BOLT	2	E
-14	MS21044N3	NUT	2	E
		---*---		
-14A	0713624-2	ANCHOR-BRAKE CYLINDER	2	F
-15	0411263-5	BEARING HALF-UPPER OUTBOARD WHEN EXHAUSTED USE S1674-1 --	2	G
	0411263-6	BEARING HALF-LOWER OUTBOARD WHEN EXHAUSTED USE S1674-1 --	2	G
	S1674-1 *	BEARING HALF-OUTBOARD	4	H
-16	0411264-5	BEARING HALF-UPPER INBOARD WHEN EXHAUSTED USE S1675-1 ---	2	G
	0411264-6	BEARING HALF-LOWER INBOARD WHEN EXHAUSTED USE S1675-1 ---	2	G
	S1675-1 *	BEARING HALF-INBOARD	4	H
		ATTACHING PARTS		
-17	AN3-16A	BOLT	2	
	AN960-10	WASHER	2	
	MS21044N3	NUT	2	
		---*---		
-18	0411306-9	WELD ASSEMBLY-LH LANDPLANE	1	J
	0411302-203	WELD ASSEMBLY-LH FLOATPLANE	1	T
	0411306-15	WELD ASSEMBLY-LH LANDPLANE	1	K
	0411306-201	WELD ASSEMBLY-LH FLOATPLANE	1	U
-18A	0760012-3	RUDDER BAR ASSEMBLY-DISENGAGING PEDALS LH LANDPLANE	1	N
	0760012-7	RUDDER BAR ASSEMBLY-DISENGAGING PEDALS LH	1	P
-19	0411306-10	WELD ASSEMBLY-RH LANDPLANE	1	J
	0411306-204	WELD ASSEMBLY-RH FLOATPLANE	1	T
	0411306-16	WELD ASSEMBLY-RH LANDPLANE	1	K
	0411306-202	WELD ASSEMBLY-RH FLOATPLANE	1	U
-19A	0760012-4	RUDDER BAR ASSEMBLY-DISENGAGING PEDALS RH LANDPLANE	1	N
	0760012-6	RUDDER BAR ASSEMBLY-DISENGAGING PEDALS RH	1	P
-19B	1260460-4	STUB ASSEMBLY-DISENGAGING PEDALS RH	1	M
-20	S1003-43A	BEARING	4	
-21	0411565	TUBE-DUAL BRAKE	2	
-22	0411562	HUB USED WITH SINGLE CONTROLS	4	
		ATTACHING PARTS		
-23	AN3-10A	BOLT	1	
	MS21044N3	NUT	1	
		---*---		

CONTINUED ON NEXT PAGE

FIGURE AND INDEX NO.	PART NUMBER	DESCRIPTION 1 2 3 4 5 6 7	UNITS PER ASSY	USABLE ON CODE
92 -24	0310453	PEDAL-BRAKE & RUDDER	2	A
	1460320-1	PEDAL-BRAKE & RUDDER	2	B
		ATTACHING PARTS		
-25	0411369-2	SHAFT	1	A
	1460501-21	SHAFT	1	Q
	1460501-36	SHAFT	1	M
-25A	0713914-1	PIN	1	M
-26	MS24665-285	PIN-COTTER	2	
-27	0411778-2	SHAFT	1	L
	0411778-4	SHAFT	1	M
-28	MS24665-132	PIN-COTTER	2	
	NAS42HT6-8	SPACER	1	L
	S1438-2	WASHER	AR	
		---*---		
-28A	1460505-1	SPRING	2	
-29	0411564	LINK-DUAL BRAKES	3	
-30	0411564-3	LINK-DUAL BRAKES	1	
		ATTACHING PARTS		
-31	MS20392-2C15	PIN	1	
-32	MS24665-132	PIN-COTTER	1	
	NAS43HT3-12	SPACER	1	
		---*---		
-33	0411307	ARM-RUDDER BAR	2	
		ATTACHING PARTS		
-34	AN3-11A	BOLT	1	
	MS21044N3	NUT	1	
		---*---		
-35	0411563	BELLCRANK ASSEMBLY USED WITH DUAL CONTROLS	3	L
	1260021-1	BELLCRANK ASSEMBLY USED WITH DUAL CONTROLS	3	M
-36	0411573-1	BELLCRANK ASSEMBLY USED WITH DUAL CONTROLS	1	
		ATTACHING PARTS		
-37	AN3-10A	BOLT	1	
	MS21044N3	NUT	1	
		---*---		
-38	0713313-1	SPRING-BRAKE & RUDDER RETURN LH	1	D
-39	0713313-2	SPRING-BRAKE & RUDDER RETURN RH	1	D
-40	1260458-6	CONTROL ASSEMBLY-DISENGAGING RUDDER PEDALS	1	R
	1260458-7	CONTROL ASSEMBLY-DISENGAGING RUDDER PEDALS	1	S
		ATTACHING PARTS		
	AN742D3	CLAMP	3	M
	AN520-10-8	SCREW	2	M
	MS21044N3	NUT	1	M
	S1613-3-75	RIVNUT	1	M
		---*---		
-41	0713906-1	BRACKET-DISENGAGING RUDDER PEDALS	1	M
		ATTACHING PARTS		
	AN3-3A	BOLT	4	M
	MS21044N3	NUT	4	M
		---*---		
-42	S1213-1	CATCH	2	M
-43	0713907-1	¤ COVER-BRACKET	1	M
		ATTACHING PARTS		
	S1021A8-6	SCREW	4	M
		---*---		

NOTE. *THESE PARTS MUST BE PURCHASED IN PAIRS WHEN INITIALLY ORDERING FOR AIRCRAFT SERIALS 18051313 THRU 18051812 & 185-0001 THRU 185-1185.

NOTE. ¤THIS PART NUMBER MUST HAVE A SECOND DASH NUMBER ADDED TO DENOTE COLOR. REFER TO HOW TO ORDER INTERIOR PARTS-PAGE XIII.

A---SERIAL 185-0001 THRU 185-0512
B---SERIAL 185-0513 THRU 18502310
SERIAL 18051313 THRU 18052384
C---SERIAL 185-0001 THRU 18502310
SERIAL 18051313 THRU 18052384
D---SERIAL 18051313 THRU 18052384
E---SERIAL 185-0001 THRU 185-0796
SERIAL 18051313 THRU 18051478

CONTINUED ON NEXT PAGE

FIGURE AND INDEX NO.	PART NUMBER	DESCRIPTION 1 2 3 4 5 6 7	UNITS PER ASSY	USABLE ON CODE
92 -		F---SERIAL 185-0797 THRU 18502310		
		SERIAL 18051479 THRU 18052384		
		G---SERIAL 185-0001 THRU 185-1185		
		SERIAL 18051313 THRU 18051812		
		H---SERIAL 185-1186 THRU 18502310		
		SERIAL 18051813 THRU 18052384		
		J---SERIAL 185-0001 THRU 185-1149		
		SERIAL 18051313 THRU 18051875		
		K---SERIAL 185-1150 THRU 185-1300		
		L---SERIAL 185-0001 THRU 185-1300		
		SERIAL 18051313 THRU 18051875		
		M---SERIAL 185-1301 THRU 18502310		
		SERIAL 18051876 THRU 18052384		
		N---SERIAL 18051876 THRU 18051993		
		P---SERIAL 185-1301 THRU 18502310		
		SERIAL 18051994 THRU 18052384		
		Q---SERIAL 185-0513 THRU 185-1300		
		SERIAL 18051313 THRU 18051875		
		R---SERIAL 185-1301 THRU 185-1599		
		SERIAL 18051876 THRU 18052103		
		S---SERIAL 18501600 THRU 18502310		
		SERIAL 18052104 THRU 18052384		
		T---SERIAL 185-0001 THRU 185-0967 FLOATPLANE ONLY		
		SERIAL 18051313 THRU 18051875		
		U---SERIAL 185-0968 THRU 185-1300 FLOATPLANE ONLY		

Master Cylinder

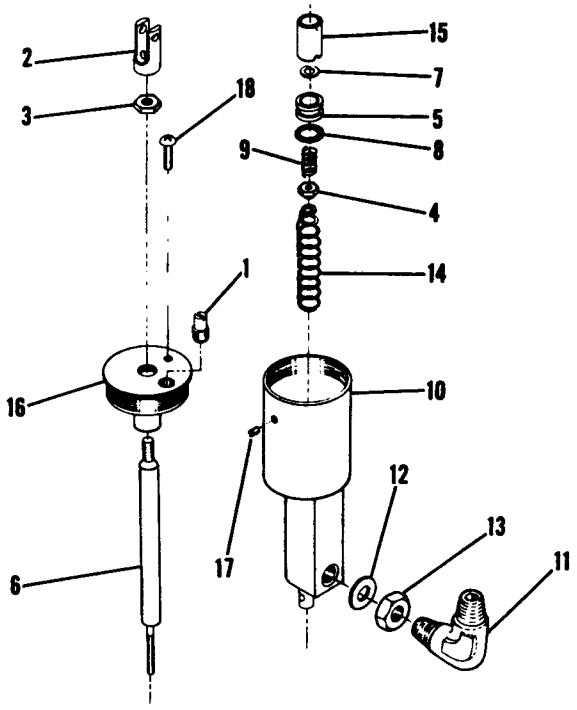

Figure 93. Brake Master Cylinder Assembly

FIGURE AND INDEX NO.	PART NUMBER	DESCRIPTION 1 2 3 4 5 6 7	UNITS PER ASSY	USABLE ON CODE
93 -	0541138-16	CYLINDER ASSEMBLY-BRAKE MASTER	2	A
	0541138-22	CYLINDER ASSEMBLY-BRAKE MASTER	2	B
- 1	0541139	PLUG	1	
- 2	0541140	CLEVIS	1	
- 3	AN316-4R	NUT-CHECK	1	
	0541138-5	PISTON ASSEMBLY-MASTER CYLINDER	1	
- 4	22FH632	NUT SPS	1	
- 5	0541143	PISTON-MASTER CYLINDER	1	
- 6	0541144	ROD-PISTON	1	
- 7	800-001-6	LOCK-O-SEAL PKSC	1	
- 8	MS28775-110	O RING	1	
- 9	0541148-1	SPRING-PISTON	1	
-10	0541147-2	BODY-MASTER CYLINDER WHEN EXHAUSTED USE 0541184-200	1	
	0541184-200	BODY ASSEMBLY-MASTER CYLINDER	1	A
	0541184-2	BODY-MASTER CYLINDER	1	B
-11	AN921-4D	ELBOW	1	A
-12	MS28778-4	GASKET	1	A
-13	AN924-4D	NUT	1	A
-14	0541148	SPRING	1	
-15	0541149	SLEEVE	1	
-16	0541151	COVER	1	
-17	AN565D6H3	SET SCREW	1	
-18	AN515-10R8	SCREW	1	

A---SERIAL 185-0001 THRU 185-1341
SERIAL 18051184 THRU 18051909
B---SERIAL 185-1342 THRU 18502310
SERIAL 18051910 THRU 18052385

Flight Controls (Cont)

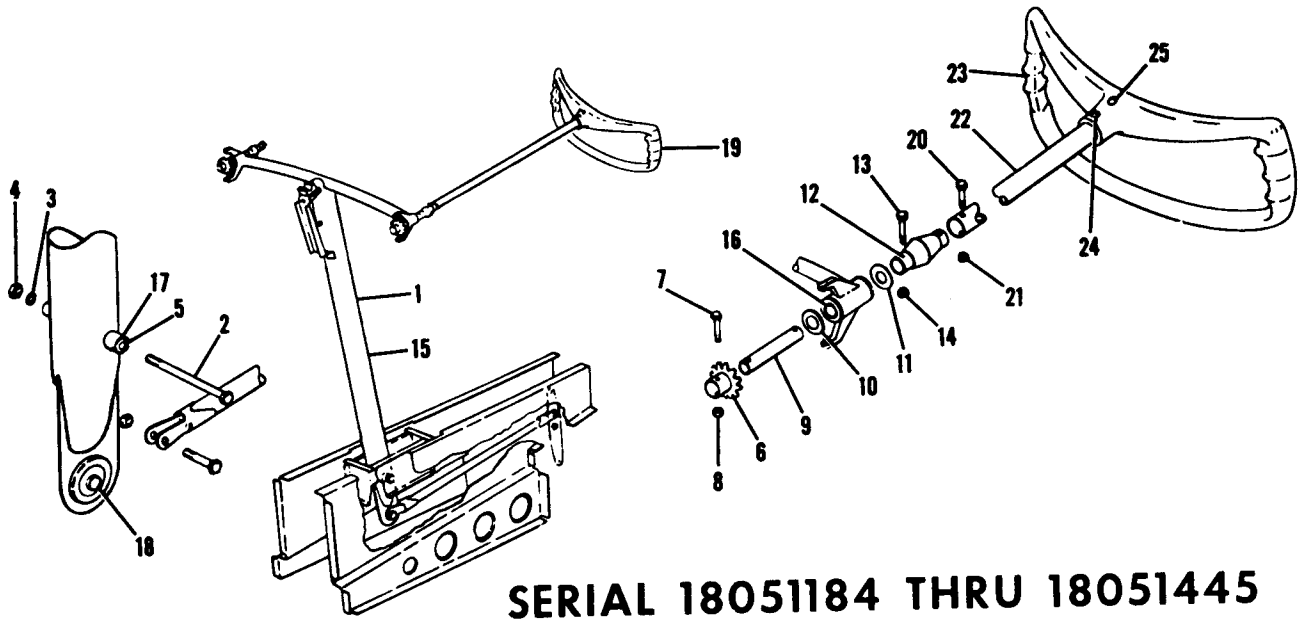

SERIAL 18051184 THRU 18051445
SERIAL 185-0001 THRU 185-0776

Figure 94. Control Tee Installation

FIGURE AND INDEX NO.	PART NUMBER	DESCRIPTION 1 2 3 4 5 6 7	UNITS PER ASSY	USABLE ON CODE
94 -		CONTROL TEE INSTALLATION	NP	G
- 1	0411221-3	CONTROL TEE ASSEMBLY	1	
		ATTACHING PARTS		
- 2	AN4-31A	BOLT	1	
- 3	AN960-416L	WASHER	1	
- 4	NAS679A4	NUT	2	
- 5	S18-30	BUSHING	1	
		---*---		
- 6	0411047	SPROCKET-AILERON CHAIN	2	
		ATTACHING PARTS		
- 7	AN3-11A	BOLT	1	
- 8	MS21044N3	NUT	1	
		---*---		
- 9	0411255	SHAFT	2	
-10	AN960-816	WASHER	2	
-11	AN960A816L	WASHER	AR	
-12	0411257	UNIVERSAL JOINT	2	
		ATTACHING PARTS		
-13	AN3-10A	BOLT	1	
-14	MS21044N3	NUT	1	
		---*---		

CONTINUED ON NEXT PAGE

FIGURE AND INDEX NO.	PART NUMBER	DESCRIPTION 1 2 3 4 5 6 7	UNITS PER ASSY	USABLE ON CODE
94 -15	0411326-3	MACHINE ASSEMBLY-CONTROL TEE	1	
-16	F620	BUSHING AXD	4	
-17	B610	BEARING TOR	2	
-18	MS20200KP4	BEARING	1	
-19	0513167-7	CONTROL WHEEL ASSEMBLY LH	1	A
	0513167-13	CONTROL WHEEL ASSEMBLY-LH	1	B
	0513332-204	CONTROL WHEEL ASSEMBLY LH	1	C
	0513167-7	CONTROL WHEEL ASSEMBLY RH	1	A
	0513167-13	CONTROL WHEEL ASSEMBLY-RH	1	B
	0513332-204	CONTROL WHEEL ASSEMBLY RH	1	C
		ATTACHING PARTS		
-20	AN3-11A	BOLT	1	
-21	MS21044N3	NUT	1	
		---*---		
-22	0413213-7	TUBE-CONTROL	1	
-23	0513166-1	WHEEL-CONTROL	1	D
	0513166-3	WHEEL-CONTROL	1	C
		ATTACHING PARTS		
-24	0413216	RIVET	1	
-25	0413216-4	RIVET	1	
		---*---		
	0713217-2	EMBLEM-CONTROL WHEEL	1	A
	0700065-1	EMBLEM-CONTROL WHEEL	1	B
	0500125-1	PLATE-CONTROL WHEEL INSIGNIA	2	C
	0500125-8	INSIGNIA-CONTROL WHEEL	2	E
	0500125-11	INSIGNIA-CONTROL WHEEL	2	F

A---SERIAL 18051184 THRU 18051312
B---SERIAL 185-0001 THRU 185-0653
C---SERIAL 18051313 THRU 18051445
SERIAL 185-0654 THRU 185-0776
D---SERIAL 18051184 THRU 18051312
SERIAL 185-0001 THRU 185-0653
E---SERIAL 18051313 THRU 18051445
F---SERIAL 185-0654 THRU 185-0776
G---SERIAL 18051184 THRU 18051445
SERIAL 185-0001 THRU 185-0776

FIGURE AND INDEX NO.	PART NUMBER	DESCRIPTION 1 2 3 4 5 6 7	UNITS PER ASSY	USABLE ON CODE
94A-		CONTROL YOKE INSTALLATION	NP	A
	0560006-1	YOKE ASSEMBLY-CONTROL	1	
		ATTACHING PARTS		
- 1	AN4-31A	BOLT	1	
- 2	AN4-10A	BOLT	1	
- 3	NAS679A4	NUT	2	
- 4	AN960-416L	WASHER	1	
- 5	AN960-416	WASHER	1	
- 6	S18-30	BUSHING	1	
		---*---		
- 7	B610	BEARING TOR	1	
- 8	AN200KS4	BEARING	1	
- 9	0511782-1	WELD ASSEMBLY	1	
-10	S378-4	PULLEY	4	
-11	AN4-30A	BOLT	2	
	NAS679A4	NUT	2	
-12	0511783-1	DRUM ASSEMBLY	1	
		ATTACHING PARTS		
-13	AN960-816L	WASHER	2	
-14	0511784-1	SHAFT	1	
-15	0511787-1	RETAINER	1	
-16	AN3-11A	BOLT	1	
	AN960-10	WASHER	1	
-17	AN3-10A	BOLT	1	
-18	MS21044N3	NUT	2	
		---*---		
-19	0511786-1	CLAMP	1	
		ATTACHING PARTS		
-20	AN3-13A	BOLT	1	
-21	MS21044N3	NUT	1	
		---*---		
-22	0511786-2	CLAMP	1	
		ATTACHING PARTS		
	AN3-12A	BOLT	1	
-23	MS21044N3	NUT	1	
		---*---		
-24	0411257	JOINT-UNIVERSAL LH ONLY	1	
-25	0511785-1	SPROCKET	2	
		ATTACHING PARTS		
-26	0511788-1	SHAFT	1	
-27	MS21044N3	NUT	1	
-28	AN3-11A	BOLT	1	
-29	AN960-816L	WASHER	2	
-30	S1004-43A	BEARING	2	
		---*---		
-31	0511789-1	SPACER USE ONLY WHEN RH CONTROLS ARE NOT INSTALLED	1	
-32	0510105-213	CABLE ASSEMBLY	1	
	0510105-313	CABLE ASSEMBLY STAINLESS STEEL	1	
		ATTACHING PARTS		
-33	NAS288-35	TERMINAL	2	
-34	AN21-10	BOLT	2	
	AN960PD6L	WASHER	2	
	AN320-1	NUT	2	
-35	MS24665-5	PIN-COTTER	2	
-36	AN155B32S	BARREL	2	
		---*---		
-37	0510105-215	CABLE ASSEMBLY-LH	1	
	0510105-315	CABLE ASSEMBLY-LH STAINLESS STEEL	1	
-38	0510105-214	CABLE ASSEMBLY-RH	1	
	0510105-314	CABLE ASSEMBLY-RH STAINLESS STEEL	1	
		ATTACHING PARTS		
-39	AN21-10	BOLT	1	
	AN960PD6L	WASHER	1	
	AN320-1	NUT	1	
-40	MS24665-5	PIN-COTTER	1	
	AN155B32S	BARREL	1	
		---*---		

CONTINUED ON NEXT PAGE

Flight Controls (Cont)

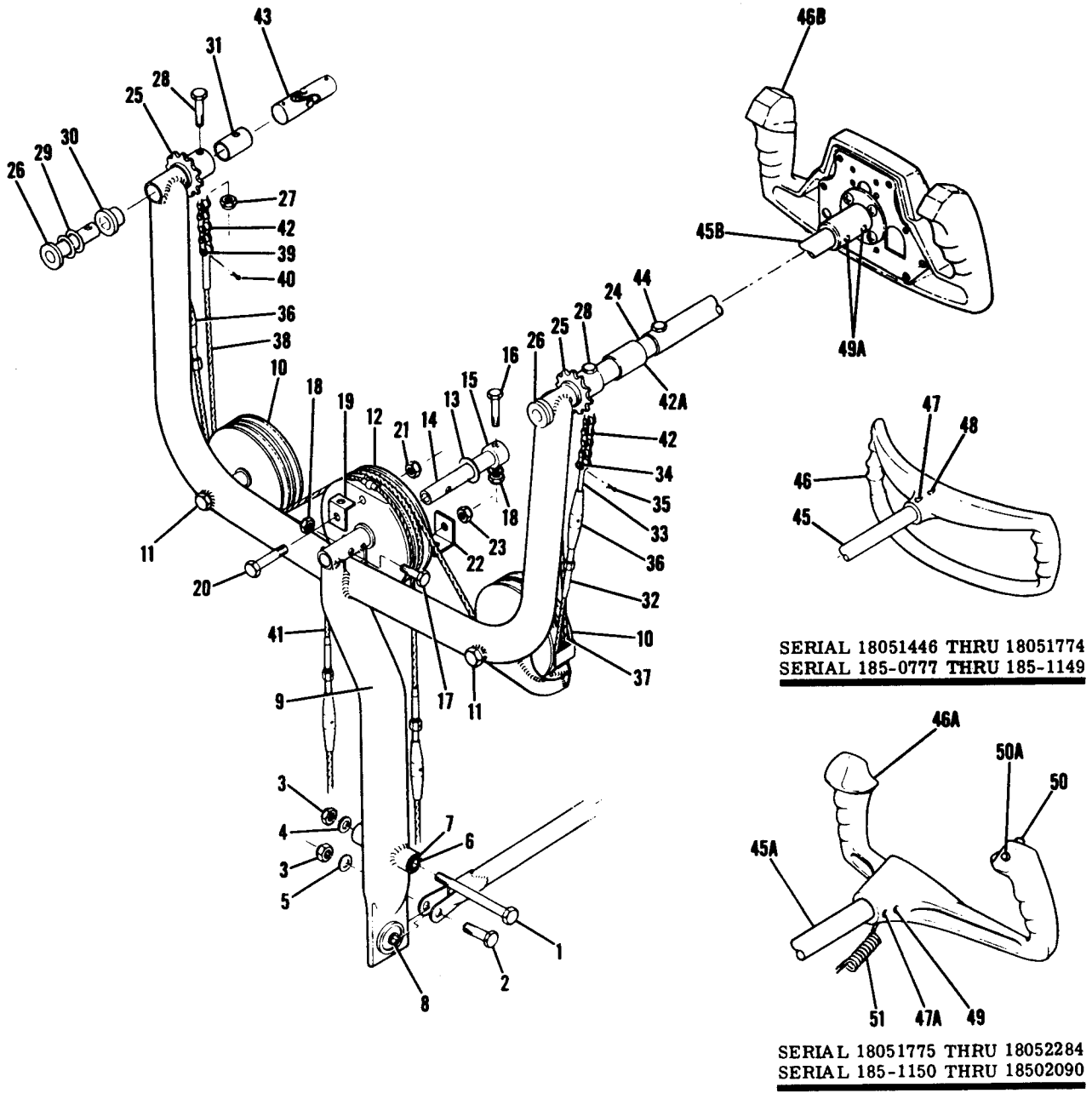

SERIAL 185-0777 THRU 18502310
SERIAL 18051446 THRU 18052384

Figure 94A. Control Yoke Installation

FIGURE AND INDEX NO.	PART NUMBER	DESCRIPTION 1 2 3 4 5 6 7	UNITS PER ASSY	USABLE ON CODE
		CABLE ASSEMBLY	1	
94A-41	0510105-216	CABLE ASSEMBLY STAINLESS STEEL	1	
	0510105-316	CHAIN	2	
-42	0413372-5	HOSE-1.12 IN LG BULK ITEM REF S1495-10-1.12	1	G
-42A	S1495-10	JOINT-UNIVERSAL RH CONTROLS ONLY	1	
-43	0411257	CONTROL WHEEL ASSEMBLY-LH&RH NOT DRILLED FOR MIC SWITCH -	2	B
	0513332-205	CONTROL WHEEL ASSEMBLY-LH&RH NOT DRILLED FOR MIC SWITCH -	2	E
	0761000-4	CONTROL WHEEL ASSEMBLY-LH DRILLED FOR MIC SWITCH	1	J
	1570149-200	CONTROL WHEEL ASSEMBLY-LH DRILLED FOR MIC SWITCH	NP	K
		CONTROL WHEEL ASSEMBLY-RH NOT DRILLED FOR MIC SWITCH	1	F
	0761000-4	CONTROL WHEEL ASSEMBLY-LH & RH	NP	L
		ATTACHING PARTS	1	
-44	AN3-11A	BOLT	1	
	MS21044N3	NUT		
		---*---	1	B
-45	0413213-7	TUBE-CONTROL	1	D
-45A	0413213-14	TUBE-CONTROL WEU 0413213-18	1	H
	0413213-18	TUBE-CONTROL	1	L
-45B	0413213-24	TUBE-CONTROL	1	B
-46	0513166-7	WHEEL-CONTROL-LH&RH NOT DRILLED FOR MIC SWITCH	1	C
-46A	1560001-13	WHEEL-CONTROL USE WITH 0761000-4 NOT DRILLED FOR MIC SWITCH	1	J
	1570149-201	WHEEL ASSEMBLY-CONTROL-LH DRILLED FOR MIC SWITCH WEU 1570149-202	1	K
	1570149-202	WHEEL ASSEMBLY-CONTROL-LH DRILLED FOR MIC SWITCH	1	L
-46B	SEE FIG 94B	WHEEL ASSEMBLY-CONTROL		
		ATTACHING PARTS	1	B
-47	0413216	RIVET	1	C
-47A	0413216-2	RIVET	1	B
-48	0413216-4	RIVET	1	C
-49	0413216-5	RIVET	2	L
-49A	0413216-6	RIVET		
		---*---	1	J
	1560110-3	PLUG-MIKE SWITCH HOLE	1	J
	AN56584-2	SCREW ATTACH PLUG OR ADAPTOR	1	J
	S1822-1	RIVET-PLASTIC	1	K
	1270682-1	PLUG	4	F
	S1959-1	INSERT	1	F
	S1959-2	INSERT	1	J
-50	A8002	SWITCH-MICROPHONE CSDC USED WITH 1570149-201	1	J
	1560110-1	ADAPTOR-MIKE SWITCH USED WITH A8002 SWITCH	1	K
-50A	S1985-1	SWITCH-MICROPHONE USED WITH 1570149-202	1	F
-51	8409	CABLE-MIKE SWITCH OR MAP LIGHT BDN	1	F
	1570142-2	CIRCUIT BOARD ASSEMBLY-MAP LIGHT INCLUDES LAMP	1	F
	1570150-1	SHIELD-MAP LIGHT		
		ATTACHING PARTS	4	F
	AN515-2R10	SCREW		
		---*---	2	
		INSIGNA ASSEMBLY-CONTROL WHEEL SEE FIG 2, 2A, 2B & 2C		

A---SERIAL 18051446 THRU 18052384
SERIAL 185-0777 THRU 18502310
B---SERIAL 18051446 THRU 18051774
SERIAL 185-0777 THRU 185-1149
C---SERIAL 18051775 THRU 18052284
SERIAL 185-1150 THRU 18502090
D---SERIAL 18051775 THRU 18052179
SERIAL 185-1150 THRU 18501843
E---SERIAL 18051775 THRU 18051875
SERIAL 185-1150 THRU 185-1300
F---SERIAL 18051876 THRU 18052284
SERIAL 185-1301 THRU 18502090
G---SERIAL 18052090 THRU 18052284
SERIAL 185-1571 THRU 18502090
H---SERIAL 18052180 THRU 18052284
SERIAL 18501844 THRU 18502090
J---SERIAL 18051876 THRU 18052196
SERIAL 185-1301 THRU 18501889
K---SERIAL 18052197 THRU 18052284
SERIAL 18501890 THRU 18502090
L---SERIAL 18052285 THRU 18052384
SERIAL 18502091 THRU 18502310

Flight Controls (Cont)

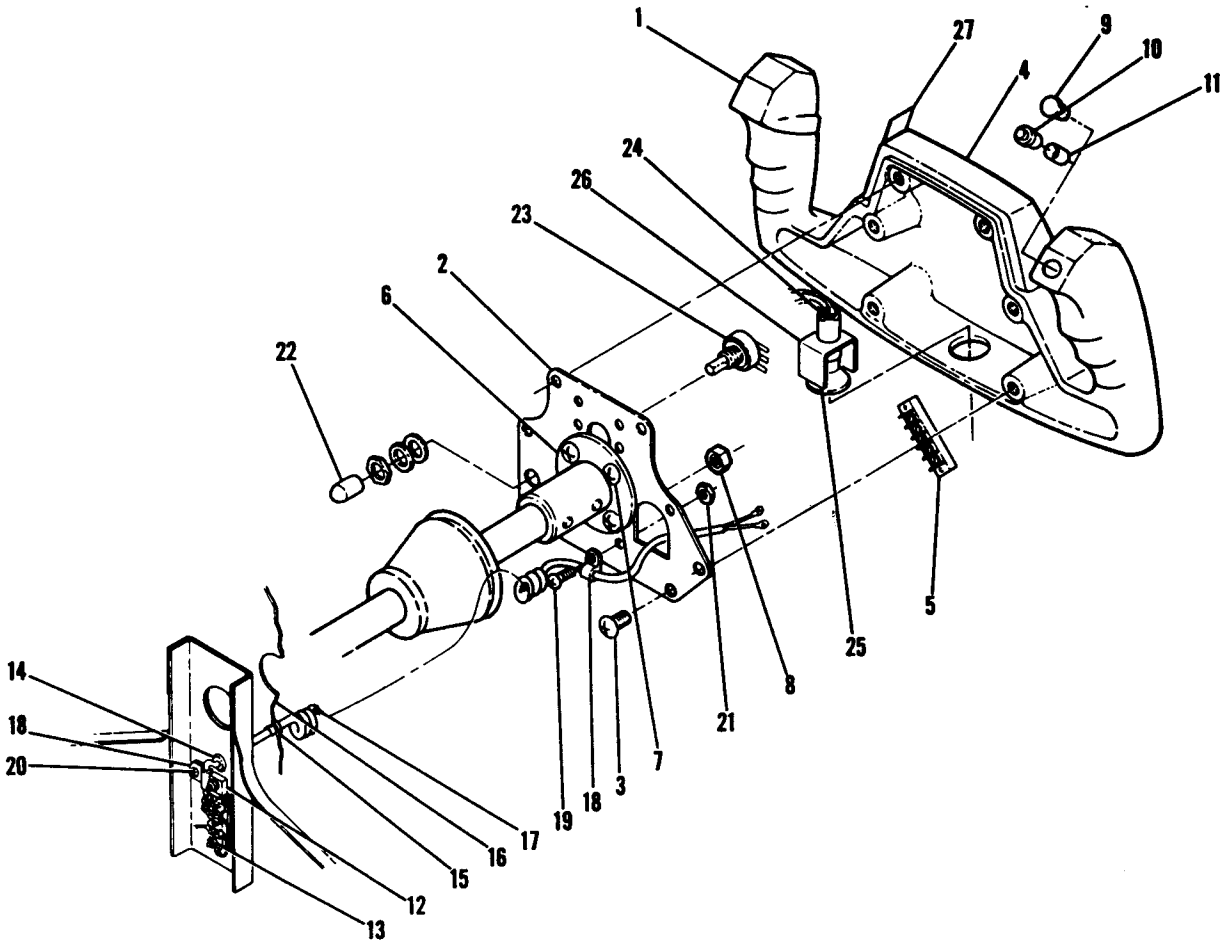

SERIAL 18502091 THRU 18502310
SERIAL 18052285 THRU 18052384

Figure 94B. Control Wheel & Switches Installation

FIGURE AND INDEX NO.	PART NUMBER	DESCRIPTION 1 2 3 4 5 6 7	UNITS PER ASSY	USABLE ON CODE
948-		CONTROL WHEEL & SWITCHES INSTALLATION	NP	A
- 1	0760019-7	CONTROL WHEEL ASSEMBLY-PADDED PILOT	1	
	0760019-5	CONTROL WHEEL ASSEMBLY-PADDED CO-PILOT	1	
- 2	0760016-1	PLATE	1	
		ATTACHING PARTS		
- 3	NAS221-9	SCREW	6	
		---*---		
	MS21209F1-20	INSERT	6	
- 4	0760018-1	PAD-CONTROL WHEEL		
- 5	351-11-05-001	TERMINAL BLOCK PILOT ONLY CIN	1	
- 6	0760017-3	ADAPTER	1	
		ATTACHING PARTS		
- 7	NAS221-11	SCREW	4	
- 8	MS21044N3	NUT	4	
		---*---		
- 9	1270682-1	PLUG PILOT ONLY	1	
-10	S1985-1	SWITCH-MIKE	1	
-11	1270683-1	INSULATOR	1	
-12	351-11-05-001	TERMINAL BLOCK CIN	1	
		ATTACHING PARTS		
-13	AN515-4R10	SCREW	2	
	AN936A4	WASHER	2	
	AN340-4	NUT	2	
	NAS43DD0-6	SPACER	2	
		---*---		
-14	MS35489-33S	GROMMET	1	
-15	K375-125	BUSHING-SNUB HEMA	1	
-16	SEE FIG	SPLICE PLATE-SHOCK PANEL	1	
-17	8409	CABLE-RETRACTILE BDN	1	
		ATTACHING PARTS		
-18	S1155-3	CLAMP	2	
-19	AN515-8R8	SCREW	1	
-20	AN515-8R6	SCREW	1	
-21	AN340-8	NUT	2	
	AN936A8	WASHER	1	
		---*---		
-22	S2093-1	COVER	1	
-23	3859A282-251A	RHEOSTAT BITD	1	
-24	4157-001	SOCKET DMC	1	
-25	12RB	LAMP	1	
-26	0760023-1	BRACKET-SOCKET	1	
-27	0705028-1	PLACARD	1	

A---SERIAL 18502091 THRU 18502310
SERIAL 18052285 THRU 18052384

Flight Controls (Cont)

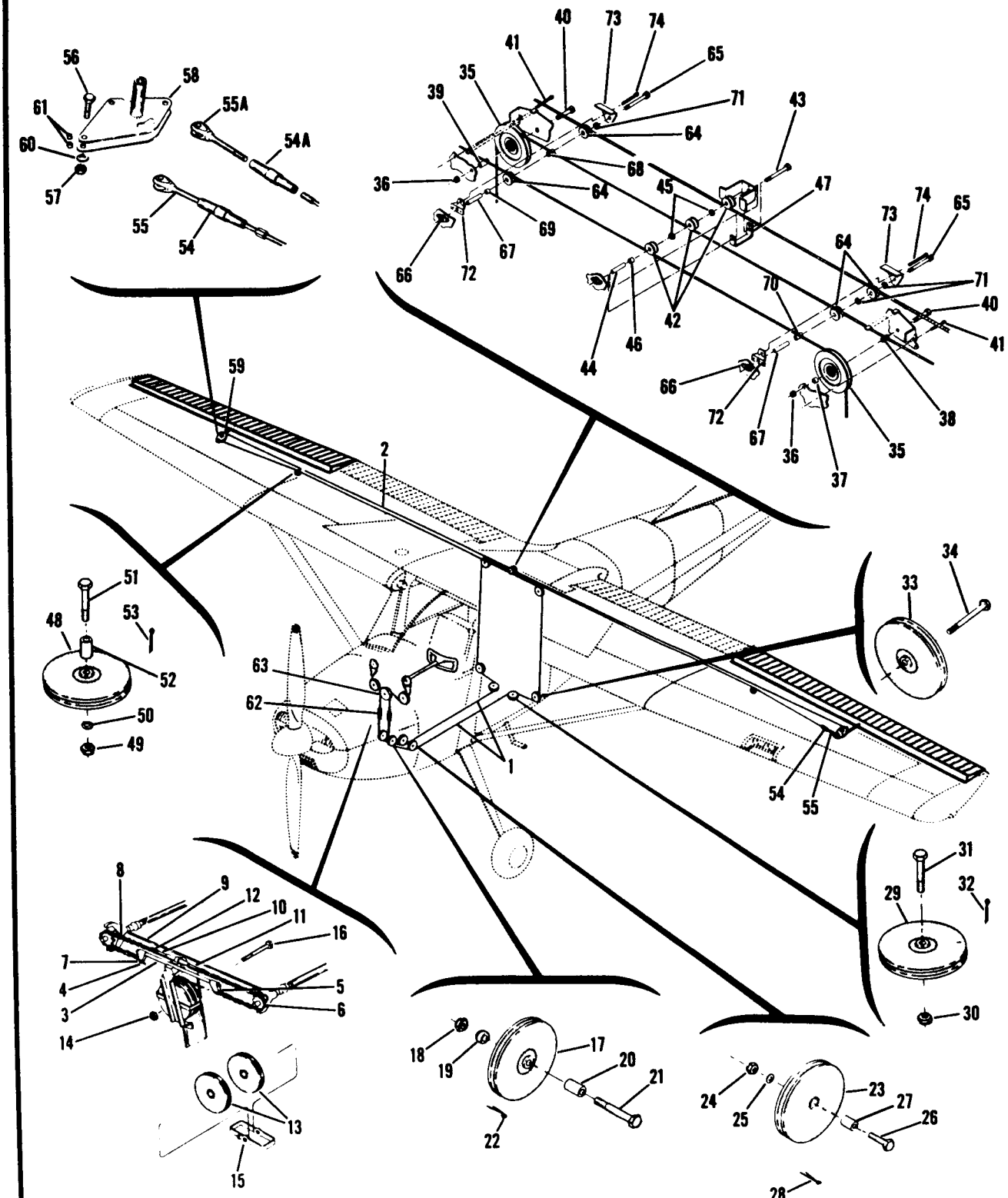

185-0001 THRU 185-0776
18051184 THRU 18051445

Figure 95. Aileron Control System Installation

FIGURE AND INDEX NO.	PART NUMBER	DESCRIPTION 1 2 3 4 5 6 7	UNITS PER ASSY	USABLE ON CODE
95 -		AILERON CONTROL SYSTEM INSTALLATION	NP	
- 1	0510105-16	CABLE-AILERON DIRECT	2	C
	0510105-116	CABLE-AILERON DIRECT STAINLESS STEEL	2	C
	0510105-222	CABLE-AILERON DIRECT	2	D
	0510105-322	CABLE-AILERON DIRECT STAINLESS STEEL	2	D
- 2	0510105-13	CABLE-AILERON CARRY THRU	1	
	0510105-113	CABLE-AILERON CARRY THRU STAINLESS STEEL	1	
- 3	0411880	BAR ASSEMBLY-AILERON CARRY THRU	1	C
- 4	0411881	TUBE ASSEMBLY-AILERON CARRY THRU	1	C
		ATTACHING PARTS		
- 5	NAS679A4	NUT	1	C
		---*---		
- 6	0411051	CHAIN ASSEMBLY	1	C
		ATTACHING PARTS		
- 7	AN21-13	BOLT	2	C
	AN320-1	NUT	2	C
	MS24665-5	PIN-COTTER	2	C
		---*---		
- 8	0411051-4	CHAIN-AILERON CONTROL	2	C
- 9	AN155B32S	BARREL-TURNBUCKLE	1	C
-10	NAS288-35LH	TERMINAL	1	C
-11	NAS228-35RH	TERMINAL	1	C
-12	MS20392-1C13	PIN-CLEVIS	2	C
	MS24665-132	PIN-COTTER	2	C
-13	S378-4	PULLEY	2	C
		ATTACHING PARTS		
-14	NAS679A4	NUT	1	C
-15	0411232	GUARD-CABLE	1	C
-16	AN4-33A	BOLT	1	C
		---*---		
-17	S378-4	PULLEY	2	
		ATTACHING PARTS		
-18	NAS679A4	NUT	1	
-19	0510136	SPACER	1	
-20	0510137	SPACER	1	
-21	AN4-21A	BOLT	1	
		---*---		
-22	MS20392-1C57	PIN	2	
	MS24665-132	PIN-COTTER	2	
-23	S378-4	PULLEY	2	
		ATTACHING PARTS		
-24	NAS679A4	NUT	1	
-25	AN960-416L	WASHER	2	
-26	AN4-14A	BOLT	1	
-27	0411489	BUSHING-PULLEY	1	B
		---*---		
-28	MS24665-355	PIN-COTTER	2	
-29	S378-4	PULLEY	2	
		ATTACHING PARTS		
-30	NAS679A4	NUT	1	
-31	AN4-10A	BOLT	1	
		---*---		

CONTINUED ON NEXT PAGE

FIGURE AND INDEX NO.	PART NUMBER	DESCRIPTION 1 2 3 4 5 6 7	UNITS PER ASSY	USABLE ON CODE
95 -32	MS24665-140	PIN-COTTER	2	
-33	S378-4	PULLEY	2	
		ATTACHING PARTS		
-34	AN4-21A	BOLT	1	
		---*---		
-35	S378-4	PULLEY	2	
		ATTACHING PARTS		
-36	NAS679A4	NUT	1	
-37	NAS43HT4-16	SPACER LH ONLY	1	
-38	NAS43HT4-28	SPACER LH ONLY	1	
-39	NAS43HT4-20	SPACER RH ONLY	1	A
	NAS43HT4-42	SPACER RH ONLY	1	B
-40	AN4-16A	BOLT	1	
		---*---		
-41	MS24665-140	PIN-COTTER	2	
-42	S394	PULLEY	3	
		ATTACHING PARTS		
-43	AN3-21A	BOLT	1	
-44	0512138	BUSHING	1	
-45	AN960-416	WASHER	1	
-46	NAS43HT4-12	SPACER	2	
-47	0512136	GUARD-CABLE	1	
		---*---		
-48	S378-3L	PULLEY	2	
		ATTACHING PARTS		
-49	NAS679A4	NUT	1	
-50	AN960-416L	WASHER	1	
-51	AN4-10A	BOLT	1	
-52	NAS382-2	BUSHING	1	B
		---*---		
-53	MS24665-134	PIN-COTTER	2	
-54	AN155B32L	BARREL-TURNBUCKLE	2	C
-54A	AN155B32L	BARREL-TURNBUCKLE R H WING ONLY	1	D
-55	AN161-32LL	FORK	2	C
-55A	AN161-32LL	FORK RH WING ONLY	1	D
-56	AN3-7A	BOLT	4	
-57	MS21044N3	NUT	4	
-58	0523223-1	BELLCRANK ASSEMBLY-AILERON RH SEE FIGURE 14	1	
	0523223	BELLCRANK ASSEMBLY-AILERON LH SEE FIGURE 14	1	
-59	0523218	ROD ASSEMBLY-AILERON PUSH PULL SEE FIGURE 14	2	
-60	AN960-10L	WASHER	4	
-61	NAS43HT4-10	SPACER LH WING ONLY	2	E
	NAS43HT4-10	SPACER LH WING	4	D
	NAS43HT4-10	SPACER RH WING	2	D
-62	AN155B32L	BARREL	2	D
-63	0560006-1	CONTROL YOKE ASSEMBLY SEE FIGURE 94A	1	D
-64	S394	PULLEY	4	F
		ATTACHING PARTS		
-65	AN3-21A	BOLT	1	
-66	NAS680A3	NUTPLATE	1	
-67	0512138	BUSHING	1	
-68	NAS43HT4-24	SPACER RH ONLY	1	
-69	NAS43HT4-20	SPACER RH ONLY	1	
-70	NAS43HT4-40	SPACER LH ONLY	1	
-71	AN960-416	WASHER RH ONLY	2	
	AN960-416	WASHER LH ONLY	1	
		---*---		
-72	0711696-1	BRACKET-AILERON GUIDE PULLEY	2	F
-73	0711696-2	BRACKET-AILERON GUIDE PULLEY	2	F
-74	MS24665-21	PIN-COTTER CABLE GUARD	2	F

A---SERIAL 185-0001 THRU 18502310
B---SERIAL 18051184 THRU 18052384
C---SERIAL 18051184 THRU 18051445
SERIAL 185-0001 THRU 185-0776
D---SERIAL 18051446 THRU 18052384
SERIAL 185-0777 THRU 18502310
E---SERIAL 18051402 THRU 18051445
SERIAL 185-0750 THRU 185-0776
F---SERIAL 18051608 THRU 18052384
SERIAL 185-0968 THRU 18502310

Flight Controls (Cont)

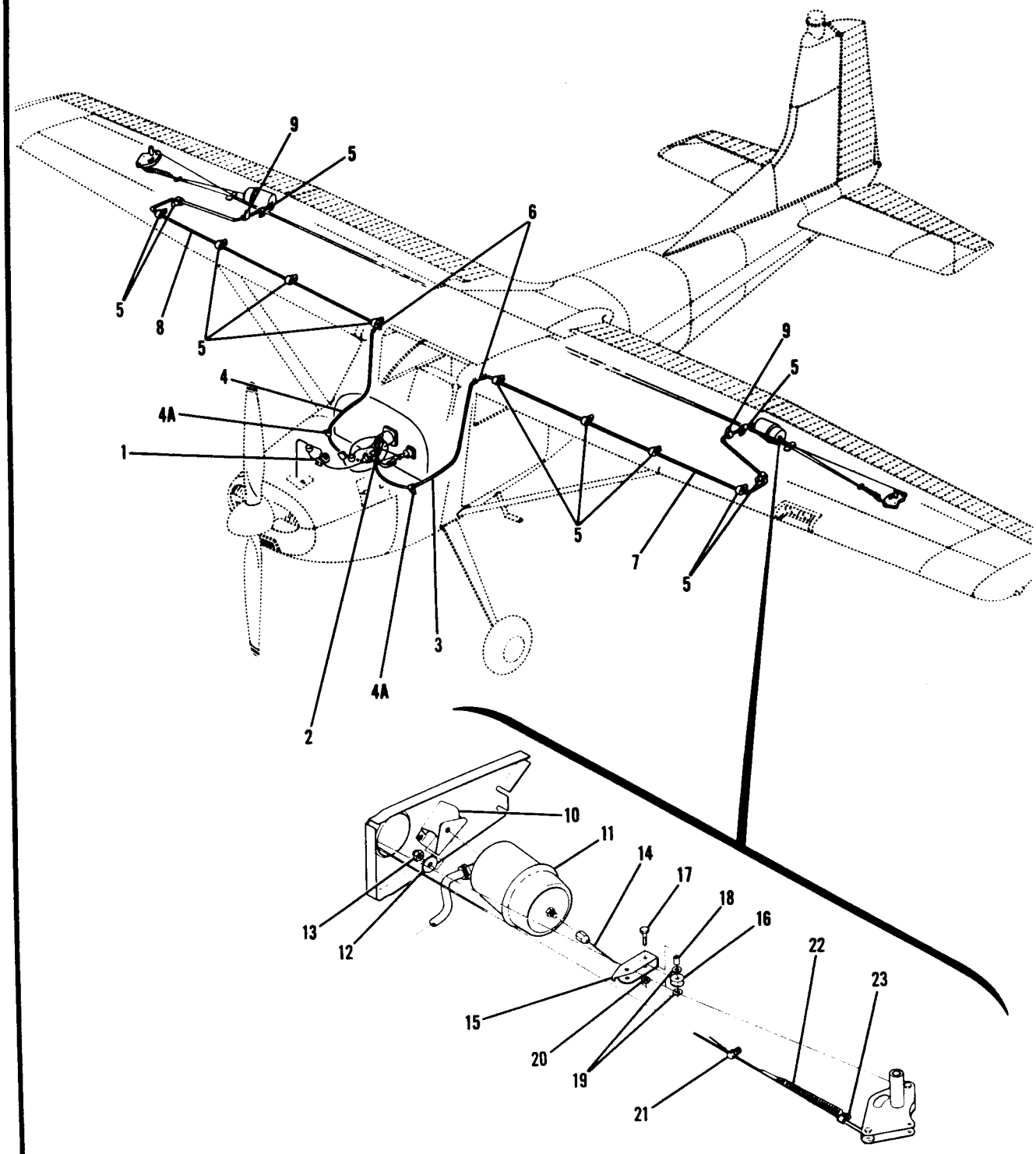

SERIAL 185-1301 THRU 18502310
SERIAL 18051876 THRU 18052384

Figure 95A. Wing Leveler Installation

FIGURE AND INDEX NO.	PART NUMBER	DESCRIPTION 1 2 3 4 5 6 7	UNITS PER ASSY	USABLE ON CODE
95A-		WING LEVELER INSTALLATION	NP	A
- 1	SEE FIG 117D	VACUUM SYSTEM	1	
- 2	SEE FIG 95B	WING LEVELER COMPONENTS	1	
- 3	S1071R3	TUBE-RED * IN LG BULK ITEM REF S1071R3-*	1	
- 4	S1071G3	TUBE-GREEN * IN LG BULK ITEM REF S1071G3-*	1	
- 4A	AN742D6	CLAMP	2	
		ATTACHING PARTS		
	AN520-10-8	SCREW	1	
	S1613-3-75	NUT	1	
		---*---	12	
- 5	S1592-2A	CLAMP		
		ATTACHING PARTS	1	
	S1021Z6-8	SCREW		
		---*---	2	
- 6	S1794-1	FITTING	4	
	S1494-6	CLAMP	1	
- 7	S1071R3	TUBE-RED * IN LG BULK ITEM REF S1071R3-*	1	
- 8	S1071G3	TUBE-GREEN * IN LG BULK ITEM REF S1071G3-*	1	
- 9	AN742D6	CLAMP	2	
		ATTACHING PARTS		
	AN3-4A	BOLT	1	
	MS21044N3	NUT	1	
		---*---		
-10	0422356-1	MOUNTING BRACKET ASSEMBLY-SERVO LH	1	
	0422356-2	MOUNTING BRACKET ASSEMBLY-SERVO RH	1	
		ATTACHING PARTS		
	AN515-8R8	SCREW	3	
		---*---		
	NAS69808	NUTPLATE	3	
-11	1220-1-0	SERVO ASSEMBLY-AILERON BTID	2	
		ATTACHING PARTS		
-12	AN970-5	WASHER	1	
-13	NAS679A5	NUT	1	
		---*---		
-14	0422358-1	CABLE ASSEMBLY-AILERON SERVO	2	
-15	0422357-1	BRACKET-PULLEY	2	
-16	S1710-1	PULLEY	2	
		ATTACHING PARTS		
-17	AN3-10A	BOLT	1	
-18	0411783-1	BUSHING	1	
-19	AN960-10	WASHER	2	
-20	MS21044N3	NUT	1	
		---*---		
-21	S8S	CONNECTOR PEUN	2	
	SEL8S	CONNECTOR PEUN ALTERNATE	2	
-22	0413416-4	SPRING	2	
-23	AN742D2	CLAMP	2	
		ATTACHING PARTS		
	AN515-10R6	SCREW	1	
	MS21044N3	NUT	1	
		---*---		

NOTE. *LENGTH TO BE DETERMINED LATER.

A---SERIAL 185-1301 THRU 18502310
SERIAL 18051876 THRU 18052384

Flight Controls (Cont)

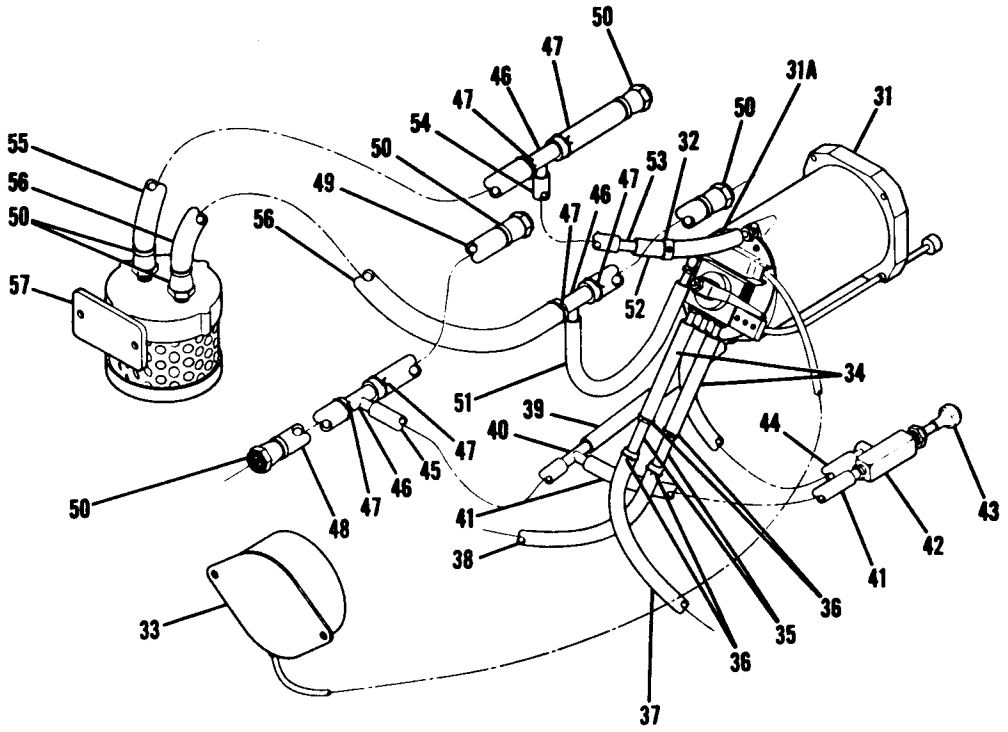

USED WITH GYROS

USED WITHOUT GYROS

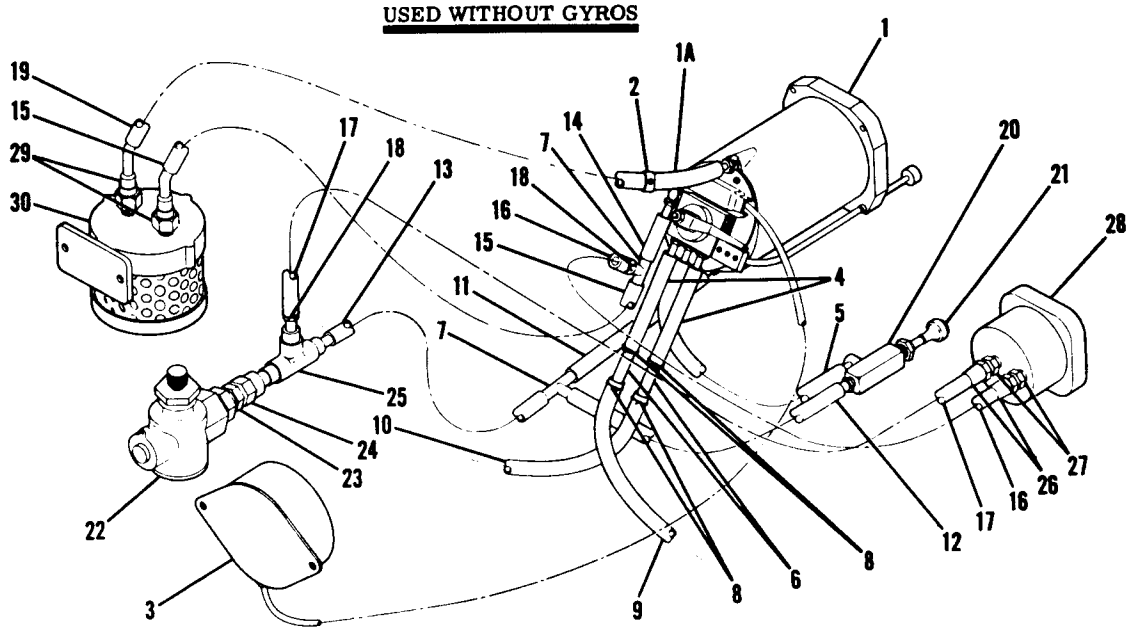

SERIAL 185-1301 THRU 18502310
SERIAL 18051876 THRU 18052384

Figure 95B. Wing Leveler Components

FIGURE AND INDEX NO.	PART NUMBER	DESCRIPTION 1 2 3 4 5 6 7	UNITS PER ASSY	USABLE ON CODE
958-		WING LEVELER COMPONENTS USED WITHOUT GYROS	NP	A
- 1	2904-1	INDICATOR-TURN COORDINATOR BTID WHEN	1	B
		EXHAUSTED USE 20351-4		
	20351-4	INDICATOR-TURN COORDINATOR BTID	1	C
		ATTACHING PARTS		
	AN51586R16	SCREW	3	
	AN3408B	NUT	3	
	AN936A6B	WASHER	3	
		---*---		
- 1A	S1800-1	TUBE-* IN LG BULK ITEM REF S1800-1-*	1	
- 2	%	VALVE-RESTRICTOR	NP	
- 3	%	INVERTER	NP	
		ATTACHING PARTS		
	AN515-8R8	SCREW	2	
	NAS679A08	NUT	2	
		---*---		
- 4	S1800-1	TUBE-* IN LG BULK ITEM REF S1800-1-*	2	
- 5	S1800-1	TUBE-* IN LG BULK ITEM REF S1800-1-*	1	
- 6	S1794-1	FITTING	2	
- 7	S1793-1	TEE	2	
- 8	S1494-6	CLAMP	4	
- 9	S1071R3	TUBE-RED * IN LG BULK ITEM REF S1071R3-*	1	
-10	S1071G3	TUBE-GREEN * IN LG BULK ITEM REF S1071G3-*	1	
-11	S1800-1	TUBE-* IN LG BULK ITEM REF S1800-1-*	1	
-12	S1800-1	TUBE-* IN LG BULK ITEM REF S1800-1-*	1	
-13	S1800-1	TUBE-* IN LG BULK ITEM REF S1800-1-*	1	
-14	S1800-1	TUBE-* IN LG BULK ITEM REF S1800-1-*	1	
-15	S1800-1	TUBE-* IN LG BULK ITEM REF S1800-1-*	1	
-16	S1495-4	HOSE-* IN LG BULK ITEM REF S1499-4J-*	1	
-17	S1495-4	HOSE-* IN LG BULK ITEM REF S1499-4J-*	1	
-18	S1494-7	CLAMP	2	
-19	S1800-1	TUBE-* IN LG BULK ITEM REF S1800-1-*	1	
-20	S1791-1	VALVE-WING LEVELER	1	
		ATTACHING PARTS		
	0713026-6	NUT	1	
		---*---		
-21	S1760-1	KNOB	1	
-22	C482001-0101	VALVE-RELIEF	1	
-23	AN912-2D	BUSHING	1	
-24	S1802-2	CONNECTOR	1	
-25	S1801-1	TEE	2	
-26	S1497-4	FITTING-SOCKETLESS	2	
-27	AN816-4D	NIPPLE	1	B
-28	S1414N1	GAGE-SUCTION WEU C668540-0101	1	C
	C668540-0101	GAGE-SUCTION		
		ATTACHING PARTS	4	
	AN5158632R12	SCREW		
		---*---	2	
-29	1713039-1	FITTING	1	
-30	C294501-0101	FILTER ASSEMBLY-AIR SEE FIGURE 117C & 117E	NP	A
		WING LEVELER COMPONENTS USED WITH GYROS	1	B
-31	2904-1	INDICATOR-TURN COORDINATOR BTID WEU 604-200-200	1	C
	604-200-200	INDICATOR-TURN COORDINATOR BTID		
		ATTACHING PARTS	3	
	AN515B6R16	SCREW	3	
	AN3408B	NUT	3	
	AN936A6B	WASHER		
		---*---	1	
-31A	S1800-1	TUBE-* IN LG BULK ITEM REF S1800-1-*	NP	
-32	%	VALVE-RESTRICTOR	NP	
-33	%	INVERTER		
		ATTACHING PARTS	2	
	AN515-8R8	SCREW	2	
	NAS679A08	NUT		
		---*---	2	
-34	S1800-1	TUBE-* IN LG BULK ITEM REF S1800-1-*	2	
-35	S1794-1	FITTING	4	
-36	S1494-6	CLAMP		

CONTINUED ON NEXT PAGE

FIGURE AND INDEX NO.	PART NUMBER	DESCRIPTION 1 2 3 4 5 6 7	UNITS PER ASSY	USABLE ON CODE
958-37	S1071R3	TUBE-RED * IN LG BULK ITEM REF S1071R3-* --------	1	
-38	S1071G3	TUBE-GREEN * IN LG BULK ITEM REF S1071G3-* ------	1	
-39	S1800-1	TUBE-* IN LG BULK ITEM REF S1800-1-* ----------	1	
-40	S1793-1	TEE ----------	1	
-41	S1800-1	TUBE-* IN LG BULK ITEM REF S1800-1-* ----------	1	
-42	S1791-1	VALVE-WING LEVELER ----------	1	
		ATTACHING PARTS		
	0713026-6	NUT ----------	1	
		---*---		
-43	S1760-1	KNOB ----------	1	
-44	S1800-1	TUBE-* IN LG BULK ITEM REF S1800-1-* ----------	1	
-45	S1800-1	TUBE-* IN LG BULK ITEM REF S1800-1-* ----------	1	
-46	S1793-2	TEE ----------	3	
-47	S1494-9	CLAMP ----------	6	
-48	S1495-6	HOSE-* IN LG BULK ITEM REF S1499-6L-* ----------	1	
-49	S1495-6	HOSE-* IN LG BULK ITEM REF S1499-6L-* ----------	1	
-50	S1497-6	FITTING-SOCKETLESS ----------	6	
-51	S1800-1	TUBE-* IN LG BULK ITEM REF S1800-1-* ----------	1	
-52	S1800-1	TUBE-* IN LG BULK ITEM REF S1800-1-* ----------	1	
-53	S1794-1	FITTING ----------	1	
-54	S1800-1	TUBE-* IN LG BULK ITEM REF S1800-1-* ----------	1	
-55	S1495-6	HOSE-* IN LG BULK ITEM REF S1499-6L-* ----------	1	
-56	S1495-6	HOSE-* IN LG BULK ITEM REF S1499-6L-* ----------	1	
-57	C294501-0101	FILTER ASSEMBLY-AIR SEE FIGURE 117C & 117E ----------	1	

NOTE. *LENGTH TO BE DETERMINED LATER

NOTE. %INVERTER, RESTRICTOR VALVE & TURN COORDINATOR MUST BE ORDERED AS A MATCHED SET.

A---SERIAL 185-1301 THRU 18502310
SERIAL 18051876 THRU 18052384
B---SERIAL 185-1301 THRU 18501934
SERIAL 18051876 THRU 18052221
C---SERIAL 18501935 THRU 18502310
SERIAL 18052222 THRU 18052384

FIGURE AND INDEX NO.	PART NUMBER	DESCRIPTION 1 2 3 4 5 6 7	UNITS PER ASSY	USABLE ON CODE
96 -		ELEVATOR CONTROL SYSTEM INSTALLATION	NP	
- 1	0510159	BELLCRANK-ELEVATOR FORWARD	1	
		ATTACHING PARTS		
- 2	AN4-10A	BOLT	1	
- 3	NAS679A4	NUT	1	
		---*---		
- 4	0510161	TUBE ASSEMBLY-BELLCRANK TO CONTROL TEE	1	B
	0760005-1	TUBE ASSEMBLY-BELLCRANK TO CONTROL YOKE	1	C
		ATTACHING PARTS		
- 5	AN4-10A	BOLT	2	
- 6	AN960-416	WASHER	2	
- 7	NAS679A4	NUT	2	
		---*---		

CONTINUED ON NEXT PAGE

Flight Controls (Cont)

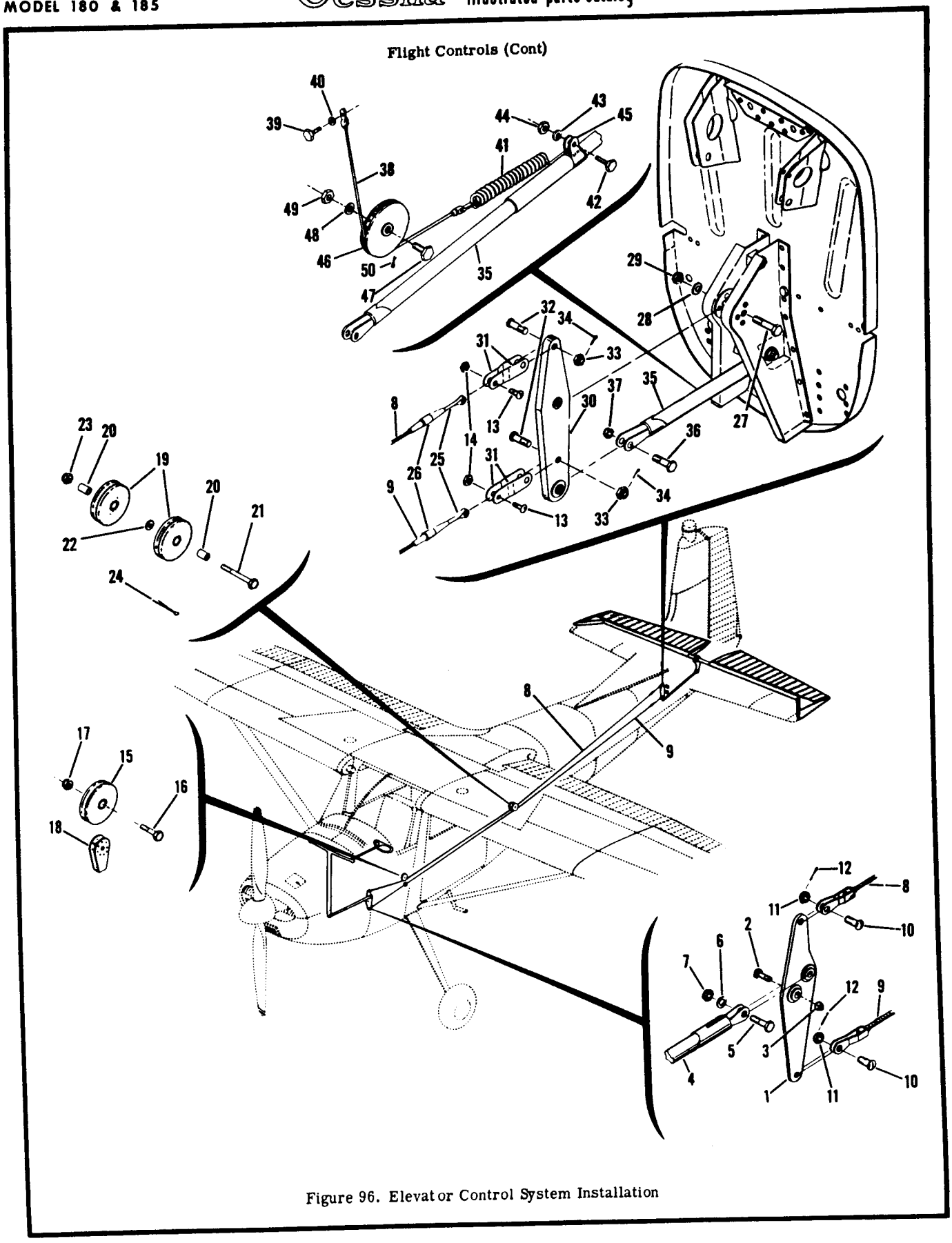

Figure 96. Elevator Control System Installation

FIGURE AND INDEX NO.	PART NUMBER	DESCRIPTION 1 2 3 4 5 6 7	UNITS PER ASSY	USABLE ON CODE
96 - 8	0510105-24	CABLE-ELEVATOR CONTROL UPPER	1	
	0510105-124	CABLE-ELEVATOR CONTROL UPPER STAINLESS STEEL	1	
- 9	0510105-25	CABLE-ELEVATOR CONTROL LOWER	1	
	0510105-125	CABLE-ELEVATOR CONTROL LOWER STAINLESS STEEL	1	
		ATTACHING PARTS		
-10	AN23-10	BOLT	2	
-11	AN310-3	NUT	2	
-12	MS24665-134	PIN-COTTER	2	
-13	AN23-10	BOLT	2	
-14	AN310-3	NUT	2	
	MS24665-132	PIN-COTTER	2	
		---*---		
-15	S378-3L	PULLEY-CABLE	1	
		ATTACHING PARTS		
-16	AN4-10A	BOLT	1	
-17	NAS679A4	NUT	1	
		---*---		
-18	0411421-2	GUARD-CABLE	1	
-19	S378-3L	PULLEY-CABLE	2	
		ATTACHING PARTS		
-20	0411489	BUSHING	1	A
-21	AN4-14A	BOLT	1	
-22	AN960-416	WASHER	1	
-23	NAS679A4	NUT	1	
-24	MS24665-140	PIN-COTTER	1	
		---*---		
-25	AN165-22RS	EYE	2	
-26	AN155832S	BARREL-TURNBUCKLE	2	
	0761202	BELLCRANK ASSEMBLY-ELEVATOR REAR	1	
		ATTACHING PARTS		
-27	AN4-12A	BOLT	1	
-28	AN960-416	WASHER	1	
-29	NAS679A4	NUT	1	
		---*---		
-30	0761202-50	BELLCRANK ASSEMBLY-ELEVATOR REAR	1	
-31	0761202-2	LINK	4	
		ATTACHING PARTS		
-32	AN24-13	BOLT	1	
-33	AN310-4	NUT	1	
-34	MS24665-134	PIN-COTTER	1	
		---*---		
-35	0510111-10	TUBE-BELLCRANK TO ELEVATOR PYLON	1	
		ATTACHING PARTS		
-36	AN4-10A	BOLT	2	
-37	NAS679A4	NUT	2	
		---*---		
-38	0510105-82	CABLE-ELEVATOR TRIM	1	
	0510105-182	CABLE-ELEVATOR TRIM STAINLESS STEEL	1	
		ATTACHING PARTS		
-39	AN3-4A	BOLT	1	
-40	AN960-10	WASHER	1	
	NAS680A3	NUTPLATE	1	
-41	1260016-1	SPRING	1	
-42	AN4-6A	BOLT	2	
-43	AN960-416	WASHER	4	
-44	NAS679A4	NUT	2	
-45	AN741T5	CLAMP	2	
		---*---		
-46	S378-2	PULLEY	1	
		ATTACHING PARTS		
-47	AN3-6A	BOLT	1	
-48	AN960-10	WASHER	1	
-49	MS21044N3	NUT	1	
		---*---		
-50	MS24665-134	PIN-COTTER	2	

A---SERIAL 18051184 THRU 18051312
B---SERIAL 18051184 THRU 18051445
SERIAL 185-0001 THRU 185-0776
C---SERIAL 18051446 THRU 18052384
SERIAL 185-0777 THRU 18502310

Flight Controls (Cont)

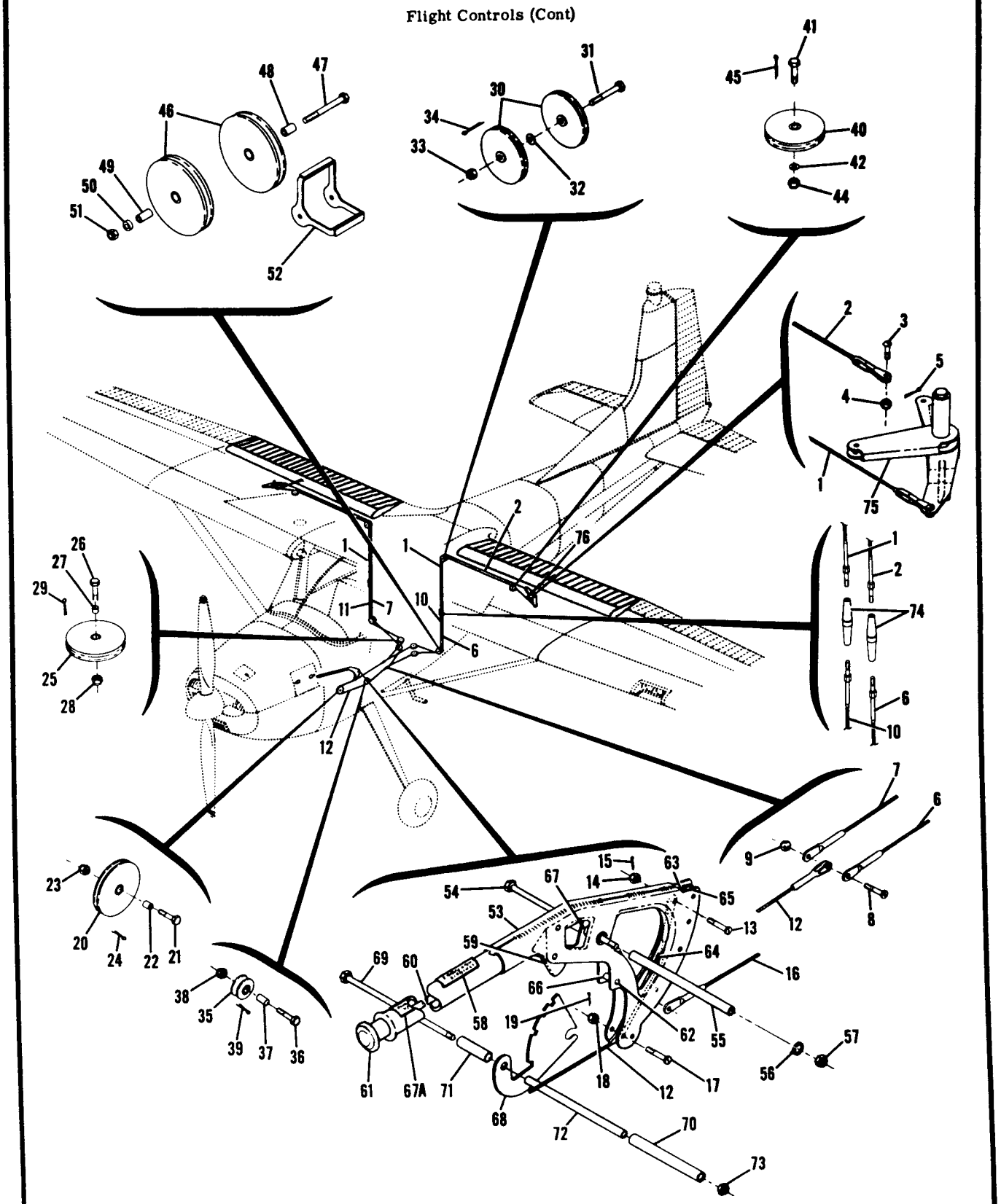

Figure 97. Flap Control System Installation

FIGURE AND INDEX NO.	PART NUMBER	DESCRIPTION 1 2 3 4 5 6 7	UNITS PER ASSY	USABLE ON CODE
97 -		FLAP CONTROL SYSTEM INSTALLATION	NP	
- 1	0510105-59	CABLE-FLAP DIRECT OUTBOARD	2	C
	0510105-159	CABLE-FLAP DIRECT OUTBOARD STAINLESS STEEL	2	C
	0510105-225	CABLE-FLAP DIRECT OUTBOARD	2	D
	0510105-325	CABLE-FLAP DIRECT OUTBOARD STAINLESS STEEL	2	D
- 2	0510105-60	CABLE-FLAP RETURN OUTBOARD	2	
	0510105-160	CABLE-FLAP RETURN OUTBOARD STAINLESS STEEL	2	
		ATTACHING PARTS		
- 3	AN23-9	BOLT	1	
- 4	AN310-3	NUT	1	
- 5	MS24665-134	PIN-COTTER	1	
		---*---		
- 6	0510105-63	CABLE-FLAP RETURN INBOARD LH	1	
	0510105-163	CABLE-FLAP RETURN INBOARD LH STAINLESS STEEL	1	
- 7	0510105-64	CABLE-FLAP RETURN INBOARD RH	1	
	0510105-164	CABLE-FLAP RETURN INBOARD RH STAINLESS STEEL	1	
		ATTACHING PARTS		
- 8	AN23-12	BOLT	1	
- 9	AN310-3	NUT	1	
		---*---		
-10	0510105-61	CABLE-FLAP DIRECT INBOARD LH	1	C
	0510105-161	CABLE-FLAP DIRECT INBOARD LH STAINLESS STEEL	1	C
	0510105-227	CABLE-FLAP DIRECT INBOARD LH	1	D
	0510105-327	CABLE-FLAP DIRECT INBOARD LH STAINLESS STEEL	1	D
-11	0510105-62	CABLE-FLAP DIRECT INBOARD RH	1	C
	0510105-162	CABLE-FLAP DIRECT INBOARD RH STAINLESS STEEL	1	C
	0510105-226	CABLE-FLAP DIRECT INBOARD RH	1	D
	0510105-326	CABLE-FLAP DIRECT INBOARD RH STAINLESS STEEL	1	D
		ATTACHING PARTS		
	AN23-12	BOLT	1	
	AN310-3	NUT	1	
		---*---		
-12	0510105-21	CABLE-FLAP RETURN FORWARD	1	
	0510105-121	CABLE-FLAP RETURN FORWARD STAINLESS STEEL	1	
		ATTACHING PARTS		
-13	AN23-16	BOLT	1	
-14	AN310-3	NUT	1	
-15	MS24665-134	PIN-COTTER	1	
		---*---		
-16	0510105-22	CABLE-FLAP DIRECT FORWARD	1	
	0510105-122	CABLE-FLAP DIRECT FORWARD STAINLESS STEEL	1	
		ATTACHING PARTS		
-17	AN23-16	BOLT	1	
-18	AN310-3	NUT	1	
-19	MS24665-134	PIN-COTTER	1	
		---*---		
-20	S378-2	PULLEY	1	
		ATTACHING PARTS		
-21	AN3-6A	BOLT	1	A
-22	NAS382-1	BUSHING	1	
-23	MS21044N3	NUT	1	
		---*---		
-24	MS24665-134	PIN-COTTER	4	
-25	S378-2	PULLEY	1	
		ATTACHING PARTS		
-26	AN3-6A	BOLT	1	A
-27	NAS382-1	BUSHING	1	
-28	MS21044N3	NUT	4	
		---*---		
-29	MS24665-132	PIN-COTTER	4	
-30	S378-2	PULLEY	1	
		ATTACHING PARTS		
-31	AN3-10A	BOLT	1	
-32	AN960-416	WASHER	1	
-33	MS21044N3	NUT	2	
		---*---		
-34	MS24665-136	PIN-COTTER	1	
-35	S394	PULLEY	1	
		ATTACHING PARTS		
-36	AN3-6A	BOLT	1	
-37	0411783	BUSHING	1	
-38	MS21044N3	NUT		
		---*---		

CONTINUED ON NEXT PAGE

FIGURE AND INDEX NO.	PART NUMBER	DESCRIPTION 1 2 3 4 5 6 7	UNITS PER ASSY	USABLE ON CODE
97 -39	MS24665-134	PIN-COTTER	1	
-40	S378-2 *	PULLEY	2	
	MS20220-2 #	PULLEY	1	
		ATTACHING PARTS		
-41	AN3-6A *	BOLT	1	
	AN5-11A #	BOLT	1	
-42	AN960-10 *	WASHER	1	
	AN960-516 #	WASHER		
-43		DELETED, NEVER USED	1	
-44	MS21044N3	NUT	1	
	NAS679A5	NUT		
		---*---	2	
-45	MS24665-134	PIN-COTTER	4	
-46	S378-4	PULLEY		
		ATTACHING PARTS		
-47	AN4-21A	BOLT	1	A
-48	NAS382-2	BUSHING	1	A
-49	0512140	BUSHING	1	
-50	NAS43HT4-10	SPACER	1	
-51	MS21044N3	NUT		
		---*---	2	
-52	0512135	GUARD-CABLE	1	B
-53	0510166-4	LEVER ASSEMBLY-FLAP FLOATPLANE & AMPHIBIAN ONLY	1	
	0510166-5	LEVER ASSEMBLY-FLAP		
		ATTACHING PARTS		
-54	AN4-62A	BOLT	1	
-55	0510178-1	BUSHING	1	
-56	MS16624-43	SNAP RING	1	
-57	NAS679A4	NUT	1	
		---*---		
-58	0510191	PLACARD-FLAP INSTRUCTIONS WHEN EXHAUSTED USE 0705004-1-	1	E
	0705004-1	PLACARD-FLAP INSTRUCTIONS	1	F
-59	0510167	LATCH ASSEMBLY-FLAP LEVER	1	
-60	0510169-3	ROD-LATCH	1	
-61	0510203-1	BUTTON-RELEASE	1	
	0510177	BUSHING-LATCH	1	
-62	AN960-4	WASHER	2	
	0510176	SPRING-LATCH RETURN	1	
-63	0510172-3	CAM-FLAP LEVER	1	
-64	0510172-4	CAM-FLAP LEVER	1	
-65	0510173	SPACER-FLAP LEVER	2	
-66	NAS42HT5-36	SPACER-FLAP LEVER	2	
-67	NAS42HT4-16	SPACER-FLAP LEVER	4	
-67A	0510188	PLACARD FLOATPLANE & AMPHIBIAN ONLY	1	B
-68	0510171-1	RATCHET-FLAP LEVER	1	
		ATTACHING PARTS		
-69	AN4-62A	BOLT	1	
-70	0510181	SPACER-FLAP LEVER ATTACHMENT	1	
-71	0510181-1	SPACER-FLAP LEVER ATTACHMENT	1	
-72	0510184	BUSHING-FLAP LEVER ATTACHMENT	1	
-73	NAS679A4	NUT	1	
		---*---		
-74	AN155B16S	BARREL-TURNBUCKLE	4	
-75	0523535	BELLCRANK-LH SEE FIGURE 15	1	
	0523535-1	BELLCRANK-RH SEE FIGURE 15	1	
-76	0523537	ROD ASSEMBLY SEE FIGURE 15	2	

NOTE. *USED ON 185 LH & RH WINGS THRU 185-0237 & ALL RH WINGS ONLY SERIAL 185-0238 & ON. ALSO USED ON 180 LH & RH STANDARD WINGS AND ON 180 RH EXTENDED RANGE WING ONLY

NOTE. #USED ON ALL LH WINGS ON 185 SERIAL 185-0238 & ON & ALL 180 LH EXTENDED RANGE WINGS.

A---SERIAL 18051184 THRU 18052384
B---SERIAL 185-0001 THRU 18502310
C---SERIAL 185-0001 THRU 185-0967
SERIAL 18051184 THRU 18051607
D---SERIAL 185-0968 THRU 18502310
SERIAL 18051608 THRU 18052384
E---SERIAL 185-0001 THRU 185-1447
SERIAL 18051184 THRU 18051993
F---SERIAL 185-1448 THRU 18502310
SERIAL 18051994 THRU 18052384

FIGURE AND INDEX NO.	PART NUMBER	DESCRIPTION 1 2 3 4 5 6 7	UNITS PER ASSY	USABLE ON CODE
98 -		RUDDER CONTROL SYSTEM INSTALLATION	NP	A
- 1	0510105-51	CABLE-FORWARD RUDDER CONTROL LH	1	
	0510105-151	CABLE-FORWARD RUDDER CONTROL LH STAINLESS STEEL	1	
- 2	0510105-71	CABLE-FORWARD RUDDER CONTROL RH	1	N
	0510105-237	CABLE-FORWARD RUDDER CONTROL RH	1	P
	0510105-171	CABLE-FORWARD RUDDER CONTROL RH STAINLESS STEEL	1	N
	0510105-337	CABLE-FORWARD RUDDER CONTROL RH STAINLESS STEEL	1	P
- 3	AN155832S	BARREL-CABLE	2	
- 4	AN161-22RS	FORK-CABLE	2	
		ATTACHING PARTS		
- 5	AN23-10	BOLT	1	
- 6	AN310-3	NUT	1	
- 7	MS24665-134	PIN-COTTER	1	
- 8	AN23-11	BOLT	1	
- 9	AN310-3	NUT	1	
-10	MS24665-132	PIN-COTTER	1	
		---*---	2	
-11	0510105-52	CABLE-AFT RUDDER CONTROL	2	
	0510105-152	CABLE-AFT RUDDER CONTROL STAINLESS STEEL	2	
		ATTACHING PARTS		
-12	AN23-10	BOLT	1	
-13	AN310-3	NUT	1	
-14	MS24665-134	PIN-COTTER	1	
-15	AN23-11	BOLT	1	
-16	AN310-3	NUT	1	
-17	MS24665-134	PIN-COTTER	1	
		---*---	2	
-18	S378-4	PULLEY	2	
		ATTACHING PARTS		
-19	AN4-14A	BOLT	1	
-20	AN960-416L	WASHER	1	
-21	NAS679A4	NUT	1	
		---*---	2	
-22	S378-3L	PULLEY	2	
		ATTACHING PARTS		
-23	AN4-10A	BOLT	1	
-24	NAS679A4	NUT	1	
		---*---	2	
-25	S378-4	PULLEY	2	
		ATTACHING PARTS		
-26	AN4-10A	BOLT	1	
-27	NAS679A4	NUT	1	
		---*---	2	
-28	0712309-1	BELLCRANK ASSEMBLY-TAIL WHEEL STEERING	2	
		ATTACHING PARTS		
-29	AN4-10A	BOLT	1	
-30	NAS382-2	BUSHING	1	
-31	NAS679A4	NUT	1	
		---*---	1	
-32	0712309-5	BRACKET-INBOARD LH	1	
-33	0712309-6	BRACKET-INBOARD RH	1	
-34	0712309-7	BRACKET-OUTBOARD LH	1	
-35	0712309-8	BRACKET-OUTBOARD RH	2	
-36	0310280	SPRING-TAILWHEEL STEERING	2	B
-37	0510105-196	CABLE-TAILWHEEL STEERING	2	C
	0510105-199	CABLE-TAILWHEEL STEERING	2	D
	0510105-323	CABLE-TAILWHEEL STEERING	2	
-38	MS24665-136	PIN-COTTER		

CONTINUED ON NEXT PAGE

Flight Controls (Cont)

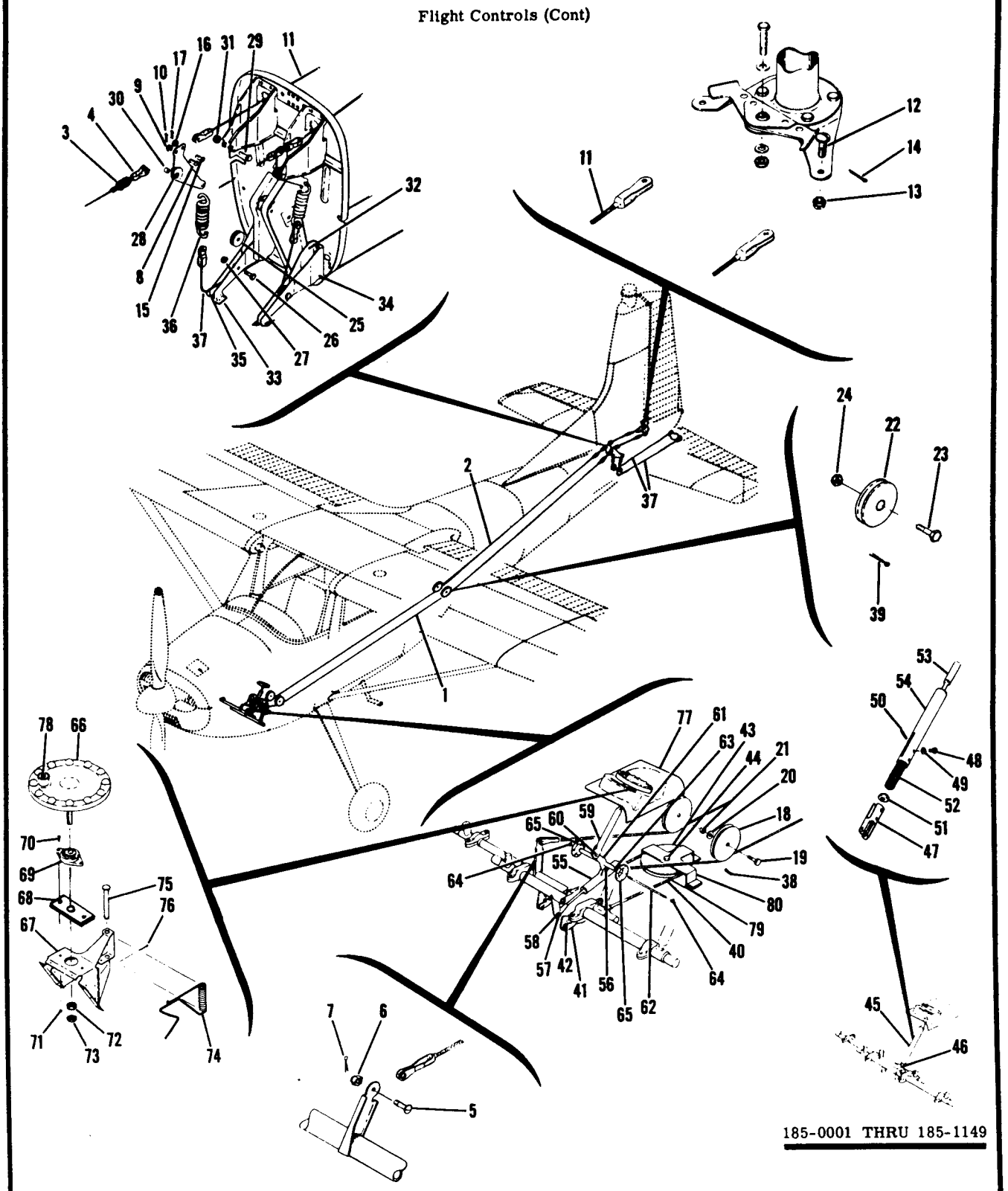

185-0001 THRU 185-1149

SERIAL 185-0001 THRU 18502310

Figure 98. Rudder Control System Installation

FIGURE AND INDEX NO.	PART NUMBER	DESCRIPTION 1 2 3 4 5 6 7	UNITS PER ASSY	USABLE ON CODE
98 -39	MS24665-355	PIN-COTTER	1	
		SYSTEM INSTALLATION-RUDDER TRIM	NP	
-40	0510105-73	CABLE-FORWARD RUDDER CONTROL	1	
	0510105-173	CABLE-FORWARD RUDDER CONTROL STAINLESS STEEL	1	
		ATTACHING PARTS		
-41	AN161-22RS	FORK-CABLE	1	
	AN155B32S	BARREL-CABLE	1	
-42	AN23-11	BOLT	2	
	AN310-3	NUT	2	
	AN960-10L	WASHER	2	
	MS24665-134	PIN-COTTER	2	
		---*---	1	
-43	S378-5	PULLEY	1	
		ATTACHING PARTS		
-44	AN6-11A	BOLT	1	
	NAS679A6	NUT	1	
		---*---	1	G
-45	0713096-1	BUNGEE ASSEMBLY	1	H
	0713096-2	BUNGEE ASSEMBLY USED WITH FLOATS ONLY	1	G
		ATTACHING PARTS		
-46	AN3-10A	BOLT	1	G
	AN960D10	WASHER	1	G
	MS21044N3	NUT	1	G
		---*---	1	G
-47	0713081-1	CLEVIS	4	G
		ATTACHING PARTS		
-48	AN502-10-4	SCREW	AR	G
-49	AN960-10L	WASHER	1	G
		---*---	1	G
-50	NAS561-3-16	ROLL PIN	1	G
-51	0713080-1	RETAINER	1	G
-52	0713084-2	SPRING	1	G
-53	0713085-1	ROD	1	G
-54	0713082-1	TUBE	1	J
-55	0713849-1	BUNGEE ASSEMBLY	1	J
		ATTACHING PARTS		
-56	AN23-9	BOLT	1	J
-57	AN23-11	BOLT	2	J
-58	AN960-10L	WASHER	2	J
	AN320-3	NUT	2	J
	MS24665-134	PIN-COTTER	1	J
		---*---	1	J
-59	0713851-1	LINK ASSEMBLY	1	J
		ATTACHING PARTS		
-60	MS20392-2C9	PIN	1	J
	AN960-10L	WASHER	1	J
	MS24665-132	PIN-COTTER	1	J
		---*---	1	J
-61	0713851-5	SHAFT ASSEMBLY	1	J
		ATTACHING PARTS		
-62	0713851-8	TIE ROD	1	J
-63	0713851-9	SPACER	AR	J
	AN960-516L	WASHER	2	J
-64	MS21044N3	NUT	2	J
		---*---	1	
-65	0713851-12	BRACKET	1	
-66	0713088-3	WHEEL ASSEMBLY	1	
-67	0713092-1	BRACKET	1	
-68	0713868-4	SPACER	1	
-69	0713537-1 *	RETAINER ASSY INCLUDES BEARING		
		ATTACHING PARTS		
-70	AN3-4A	BOLT	2	
-71	MS21044N3	NUT	2	
		---*---	1	
-72	AN340-416	NUT	1	
-73	AN356-420	NUT-LOCK	1	
-74	0713531-1	ARM	1	
		ATTACHING PARTS		
-75	MS20392-2C53	PIN	1	
-76	MS24665-132	PIN-COTTER		
		---*---		

CONTINUED ON NEXT PAGE

FIGURE AND INDEX NO.	PART NUMBER	DESCRIPTION 1 2 3 4 5 6 7	UNITS PER ASSY	USABLE ON CODE
98 -77	0713093-2-243	COVER-RUDDER TRIM SYSTEM	1	E
	0713093-2 ¤	COVER-RUDDER TRIM SYSTEM	1	F
	0713257-1 ¤	COVER-RUDDER TRIM SYSTEM	1	K
		ATTACHING PARTS		
	S1021Z8-10	SCREW	4	
		---*---		
-78	0713087-1	KNOB	1	
		ATTACHING PARTS		
	AN525-10R6	SCREW	1	
		---*---		
-79	0713086-1	BRACKET-LOWER	1	
-80	0713086-2	BRACKET-UPPER	1	

NOTE. ¤THIS PART NUMBER MUST HAVE A SECOND DASH NUMBER ADDED TO DENOTE COLOR. REFER TO HOW TO ORDER INTERIOR PARTS-PAGE XIII.

NOTE. *WHEN INITIALLY ORDERING THIS PART ALSO ORDER ONE 0713868-4 SPACER

A---SERIAL 185-0001 THRU 18502310
B---SERIAL 185-0001 THRU 185-0237
C---SERIAL 185-0238 THRU 185-0768
D---SERIAL 185-0769 THRU 18502310
E---SERIAL 185-0001 THRU 185-0776
F---SERIAL 185-0777 THRU 185-1300
G---SERIAL 185-0001 THRU 185-1149
H---SERIAL 185-0001 THRU 185-0967
J---SERIAL 185-0968 THRU 18502310 FLOATPLANE
SERIAL 185-1150 THRU 18502310
K---SERIAL 185-1301 THRU 18502310
L---SERIAL 185-0001 THRU 185-1425
M---SERIAL 185-1426 THRU 18502310
N---SERIAL 185-0001 THRU 18502206
P---SERIAL 18502207 THRU 18502310

Flight Controls (Cont)

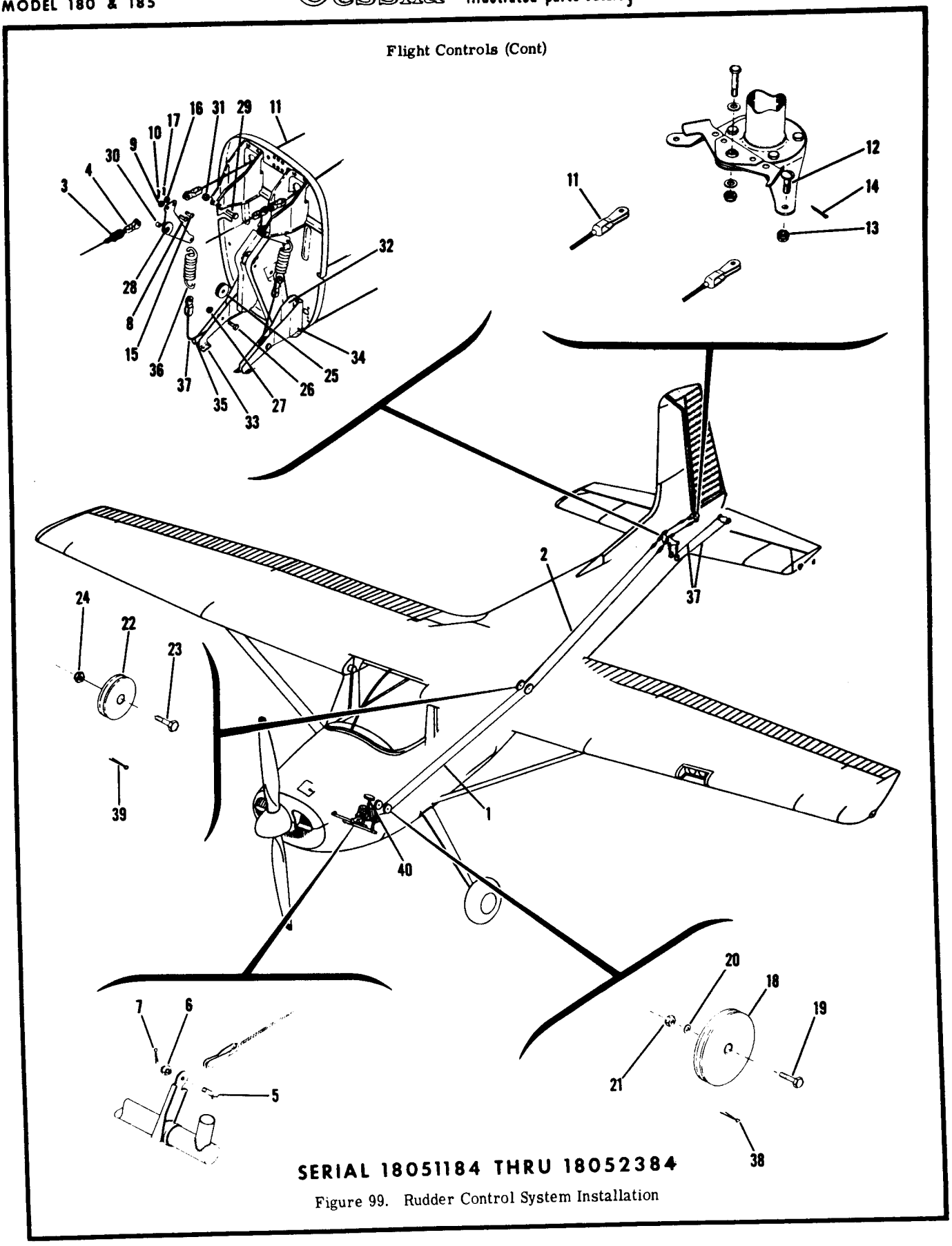

SERIAL 18051184 THRU 18052384

Figure 99. Rudder Control System Installation

FIGURE AND INDEX NO.	PART NUMBER	DESCRIPTION 1 2 3 4 5 6 7	UNITS PER ASSY	USABLE ON CODE
99 -		RUDDER CONTROL SYSTEM INSTALLATION	NP	A
- 1	0510105-51	CABLE-FORWARD RUDDER CONTROL LH	1	E
	0510105-71	CABLE-FORWARD RUDDER CONTROL LH	1	F
	0510105-151	CABLE-FORWARD RUDDER CONTROL LH STAINLESS STEEL	1	E
	0510105-171	CABLE-FORWARD RUDDER CONTROL LH STAINLESS STEEL	1	F
- 2	0510105-71	CABLE-FORWARD RUDDER CONTROL RH	1	E
	0510105-237	CABLE-FORWARD RUDDER CONTROL RH	1	F
	0510105-171	CABLE-FORWARD RUDDER CONTROL RH STAINLESS STEEL	1	E
	0510105-337	CABLE-FORWARD RUDDER CONTROL RH STAINLESS STEEL	1	F
- 3	AN155B32S	BARREL-CABLE	2	
- 4	AN161-22RS	FORK-CABLE	2	
		ATTACHING PARTS		
- 5	AN23-10	BOLT	1	
- 6	AN310-3	NUT	1	
- 7	MS24665-134	PIN-COTTER	1	
- 8	AN23-11	BOLT	1	
- 9	AN310-3	NUT	1	
-10	MS24665-132	PIN-COTTER	1	
		---*---		
-11	0510105-52	CABLE-AFT RUDDER CONTROL	2	
	0510105-152	CABLE-AFT RUDDER CONTROL STAINLESS STEEL	2	
		ATTACHING PARTS		
-12	AN23-10	BOLT	1	
-13	AN310-3	NUT	1	
-14	MS24665-132	PIN-COTTER	1	
-15	AN23-11	BOLT	1	
-16	AN310-3	NUT	1	
-17	MS24665-134	PIN-COTTER	1	
		---*---		
-18	S378-4	PULLEY	2	
		ATTACHING PARTS		
-19	AN4-14A	BOLT	1	
-20	AN960-416L	WASHER	1	
-21	NAS679A4	NUT	1	
		---*---		
-22	S378-3L	PULLEY	2	
		ATTACHING PARTS		
-23	AN4-10A	BOLT	1	
-24	NAS679A4	NUT	1	
		---*---		
-25	S378-4	PULLEY	2	
		ATTACHING PARTS		
-26	AN4-10A	BOLT	1	
-27	NAS679A4	NUT	1	
		---*---		
-28	0712309-1	BELLCRANK ASSEMBLY-TAILWHEEL STEERING	2	
		ATTACHING PARTS		
-29	AN4-10A	BOLT	1	
-30	NAS382-2	BUSHING	1	
-31	NAS679A4	NUT	1	
		---*---		
-32	0712309-5	BRACKET-INBOARD LH	1	
-33	0712309-6	BRACKET-INBOARD RH	1	
-34	0712309-7	BRACKET-OUTBOARD LH	1	
-35	0712309-8	BRACKET-OUTBOARD RH	1	
-36	0742200-5	SPRING-TAILWHEEL STEERING	2	
-37	0510105-153	CABLE-TAILWHEEL STEERING	2	B
	0510105-323	CABLE-TAILWHEEL STEERING	2	C
-38	MS24665-136	PIN-COTTER	2	
-39	MS24665-355	PIN-COTTER	1	
-40	SEE FIG 99A	RUDDER TRIM INSTL	1	D

A---SERIAL 18051184 THRU 18052384
B---SERIAL 18051184 THRU 18051410
C---SERIAL 18051411 THRU 18052384
D---SERIAL 18051994 THRU 18052384
E---SERIAL 18051184 THRU 18052331
F---SERIAL 18052332 THRU 18052384

Flight Controls (Cont)

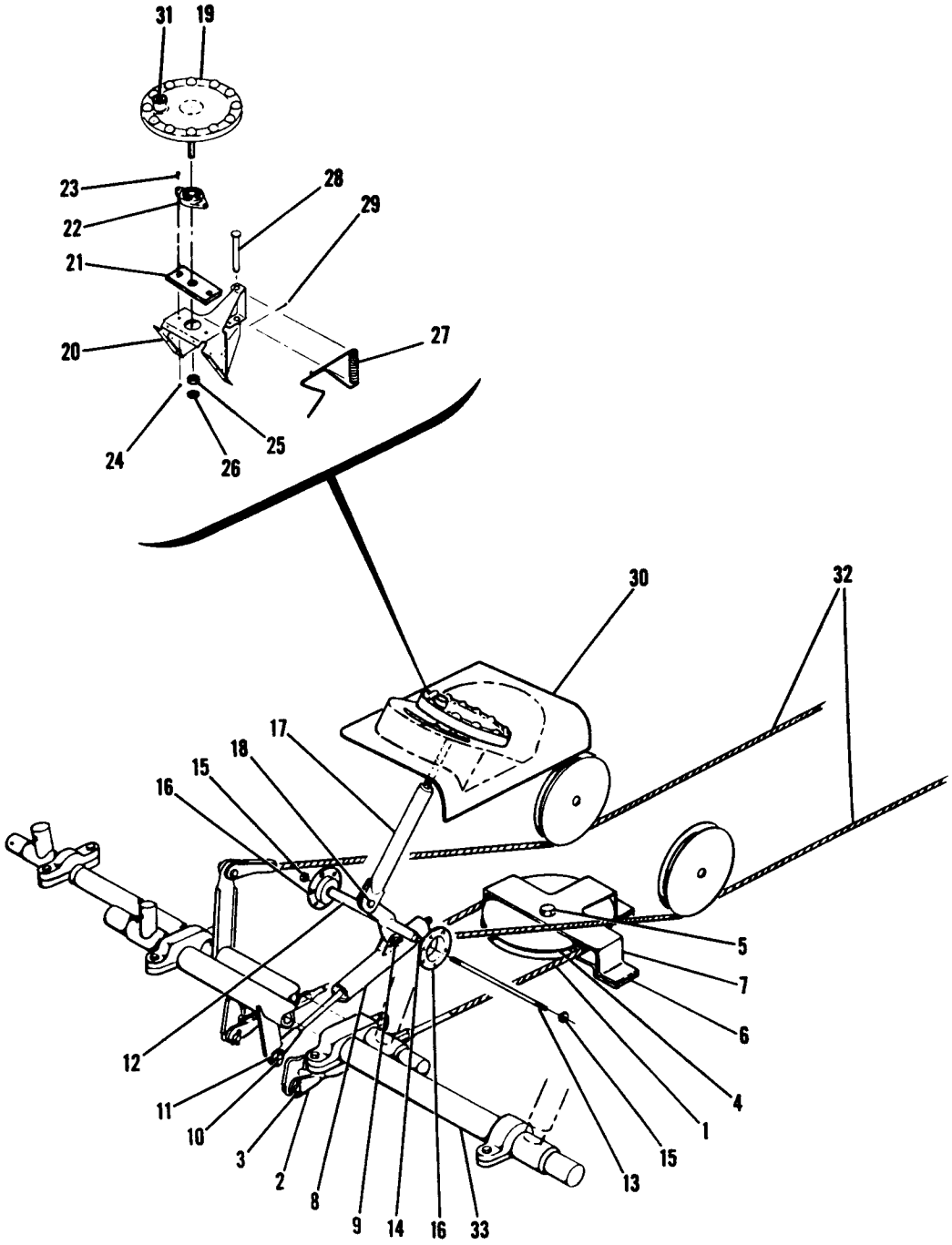

SERIAL 18051994 THRU 18052384

Figure 99A. Rudder Trim Installation

FIGURE AND INDEX NO.	PART NUMBER	DESCRIPTION 1 2 3 4 5 6 7	UNITS PER ASSY	USABLE ON CODE
99A-		RUDDER TRIM INSTALLATION	NP	A
- 1	0510105-73	CABLE-FORWARD RUDDER CONTROL	1	
	0510105-173	CABLE-FORWARD RUDDER CONTROL STAINLESS STEEL	1	
		ATTACHING PARTS	1	
- 2	AN161-22RS	FORK-CABLE	1	
	AN155B32S	BARREL-CABLE	2	
- 3	AN23-11	BOLT	2	
	AN310-3	NUT	2	
	AN960-10L	WASHER	2	
	MS24665-134	PIN-COTTER		
		---*---	1	
- 4	S378-5	PULLEY		
		ATTACHING PARTS	1	
- 5	AN6-11A	BOLT	1	
	NAS679A6	NUT		
		---*---	1	
- 6	0713086-1	BRACKET-LOWER	1	
- 7	0713086-2	BRACKET-UPPER	1	
- 8	0713849-1	BUNGEE ASSEMBLY		
		ATTACHING PARTS	1	
- 9	AN23-9	BOLT	1	
-10	AN23-11	BOLT	2	
-11	AN960-10L	WASHER	2	
	AN320-3	NUT	2	
	MS24665-134	PIN-COTTER		
		---*---	1	
-12	0713851-5	SHAFT ASSEMBLY		
		ATTACHING PARTS	1	
-13	0713851-8	TIE ROD	1	
-14	0713851-9	SPACER	AR	
	AN960-516L	WASHER	2	
-15	MS21044N3	NUT		
		---*---	2	
-16	0713851-12	BRACKET	1	
-17	0713851-1	LINK ASSEMBLY		
		ATTACHING PARTS	1	
-18	MS20392-2C9	PIN	1	
	AN960-10L	WASHER	1	
	MS24665-132	PIN-COTTER		
		---*---	1	
-19	0713088-3	WHEEL ASSEMBLY	1	
-20	0713092-1	BRACKET	1	
-21	0713868-4	SPACER	1	
-22	0713537-1 *	RETAINER ASSY INCLUDES BEARING		
		ATTACHING PARTS	2	
-23	AN3-4A	BOLT	2	
-24	MS21044N3	NUT		
		---*---	1	
-25	AN340-416	NUT	1	
-26	AN356-420	NUT-LOCK	1	
-27	0713531-1	ARM		
		ATTACHING PARTS	1	
-28	MS20392-2C53	PIN	1	
-29	MS24665-132	PIN-COTTER		
		---*---	1	
-30	0713257-1 ¤	COVER-RUDDER TRIM SYSTEM		
		ATTACHING PARTS	4	
	S1021Z8-10	SCREW		
		---*---	1	
-31	0713087-1	KNOB		
		ATTACHING PARTS	1	
	AN525-10R6	SCREW		
		---*---	NP	
-32	SEE FIG 99	RUDDER CONTROL CABLES INSTALLATION	NP	
-33	SEE FIG 92	RUDDER PEDAL INSTALLATION		

NOTE. ¤THIS PART NUMBER MUST HAVE A SECOND DASH NUMBER ADDED TO DENOTE COLOR. REFER TO HOW TO ORDER INTERIOR PARTS-PAGE XIII.

NOTE.*WHEN INITIALLY ORDERING THIS PART ALSO ORDER ONE 0713868-4 SPACER.

A---SERIAL 18051994 THRU 18052384

Flight Controls (Cont)

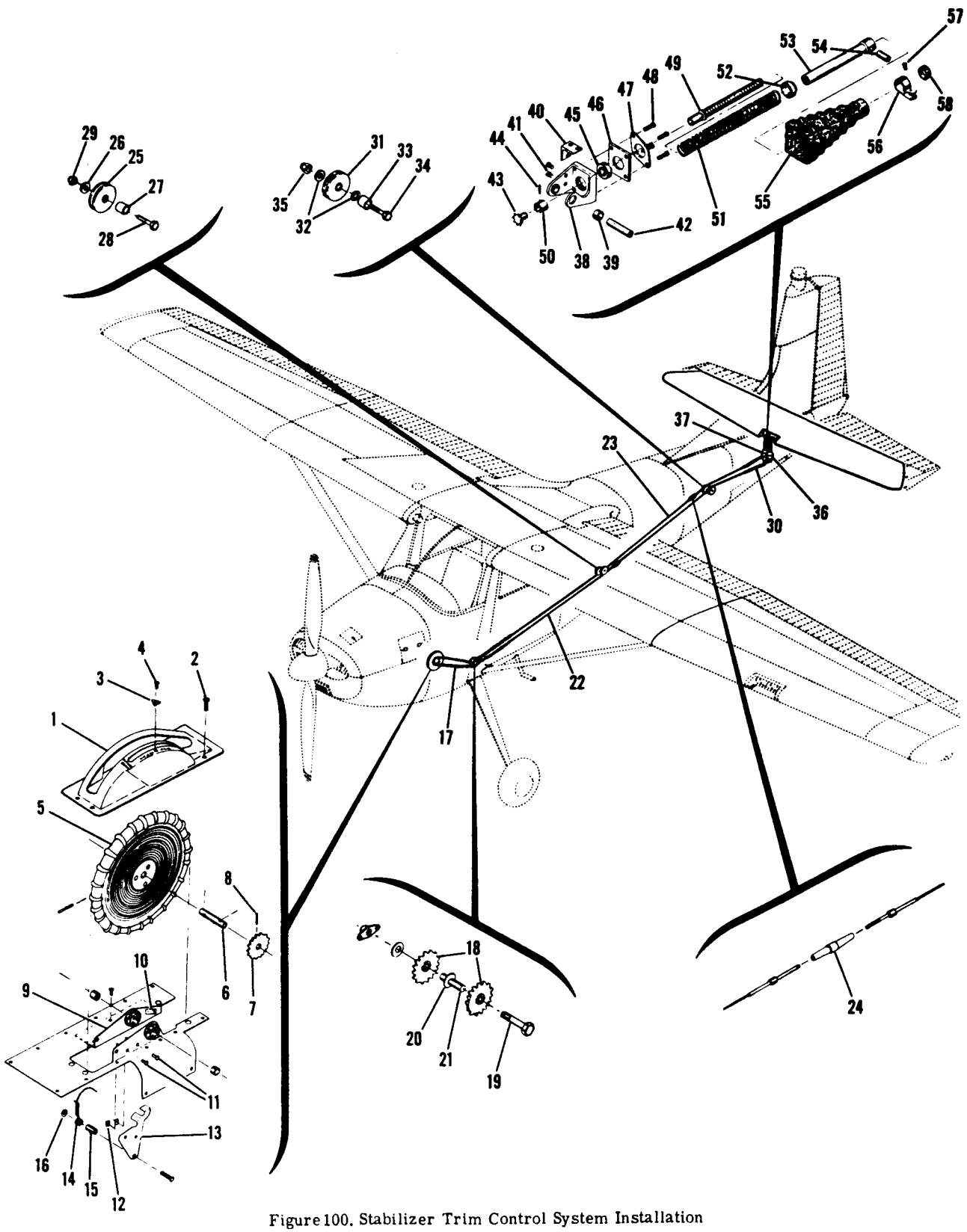

Figure 100. Stabilizer Trim Control System Installation

FIGURE AND INDEX NO.	PART NUMBER	DESCRIPTION 1 2 3 4 5 6 7	UNITS PER ASSY	USABLE ON CODE
100 -		STABILIZER TRIM CONTROL SYSTEM INSTALLATION	NP	
- 1	0713025-6 ■	COVER ASSEMBLY-TRIM CONTROL WHEEL	1	
		ATTACHING PARTS		
- 2	S1021Z6-8	SCREW	4	
		---*---		
- 3	0713025-1	POINTER-COVER ASSEMBLY	1	
		ATTACHING PARTS		
- 4	S1021Z4-4	SCREW	1	
		---*---		
- 5	0761205	WHEEL ASSEMBLY-STABILIZER TRIM	1	E
- 6	0761205-2	SHAFT-TRIM WHEEL	1	E
- 7	0761210-1	SPROCKET-TRIM WHEEL	1	E
		ATTACHING PARTS		
- 8	0761205-3	ROLL PIN WHEN EXHAUSTED USE NAS561-3-8	2	
	NAS561-3-8	ROLL PIN	2	
		---*---		
	SEE FIG 100A	TRIM WHEEL INSTALLATION-STABILIZER	1	D
- 9	0713023-7	BRACKET ASSEMBLY	1	B
	0713824-1	BRACKET & LOCK ASSEMBLY	1	C
-10	0713023-3	STOP ASSEMBLY	2	B
	0713827-1	CATCH ASSEMBLY	2	C
	NAS295M4	BEARING	1	
	0713032	INDICATOR ASSEMBLY-TRIM CONTROL	1	E
		ATTACHING PARTS		
-11	S1021Z6-6	SCREW	2	E
-12	NAS446-2-3	NUT	2	E
		---*---		
-13	0713032-4	GUARD-CHAIN	1	E
-14	0713032-3	INDICATOR	1	E
-15	0713032-1	BUSHING	1	E
-16	0713032-2	COLLAR	1	E
-17	0432138-2	CHAIN-STABILIZER TRIM FOWARD	1	
-18	0761210-4	SPROCKET ASSEMBLY	2	
		ATTACHING PARTS		
-19	AN3-12A	BOLT	1	
-20	AN960-416	WASHER	1	
-21	0411491-1	BUSHING	1	
		---*---		
-22	0510105-28	CABLE-STABILIZER TRIM CONTROL FORWARD	2	
	0510105-128	CABLE-STABILIZER TRIM CONTROL FORWARD-STAINLESS STEEL	2	
-23	0510105-29	CABLE-STABILIZER TRIM CONTROL AFT	2	
	0510105-129	CABLE-STABILIZER TRIM CONTROL AFT-STAINLESS STEEL	2	
		ATTACHING PARTS		
-24	AN155885	BARREL	1	
		---*---		
-25	S378-1L	PULLEY	2	
		ATTACHING PARTS		
-26	AN960-416L	WASHER	1	
-27	0411491	BUSHING	1	A
-28	AN3-10A	BOLT	1	
-29	MS21044N3	NUT	1	
		---*---		
-30	0432138-3	CHAIN-STABILIZER TRIM AFT	1	
-31	S378-1L	PULLEY	2	
		ATTACHING PARTS		
-32	AN960-10L	WASHER	2	
-33	NAS382-1	SPACER	1	A
-34	AN3-6A	BOLT	1	
-35	MS21044N3	NUT	1	
		---*---		
-36	0712500-1	ACTUATOR ASSEMBLY-STABILIZER LH	1	
-37	0712500-2	ACTUATOR ASSEMBLY-STABILIZER RH	1	
		ATTACHING PARTS		
	AN4-15A	BOLT-UPPER	1	
	AN4-20A	BOLT-LOWER	1	
	NAS679A4	NUT	1	
		---*---		

CONTINUED ON NEXT PAGE

FIGURE AND INDEX NO.	PART NUMBER	DESCRIPTION 1 2 3 4 5 6 7	UNITS PER ASSY	USABLE ON CODE
100 -38	0712500-5	HINGE ASSEMBLY-ACTUATOR LH	1	
	0712500-6	HINGE ASSEMBLY-ACTUATOR RH	1	
-39	0712500-14	BUSHING	2	
-40	0712500-8	GUARD-CABLE	1	
		ATTACHING PARTS		
-41	AN500A8-4	SCREW	2	
		---*---		
-42	0712500-10	BUSHING	1	
-43	0310332	SPROCKET	1	
-44	NAS561-3-8	ROLL PIN	1	
-45	MS20201KP6A	BEARING	1	
-46	0712500-9	CAP	1	
-47	0712500-16	PLATE	1	
		ATTACHING PARTS		
-48	AN500A8-8	SCREW	4	
		---*---		
-49	0712500-11	SCREW-BAR	1	
-50	0712500-7	COLLAR-RETAINER	1	
-51	0712501	SPRING-ACTUATOR	1	
-52	0712500-17	COLLAR	1	
-53	0712500-13	BARREL	1	
-54	0712502	BUSHING-ECCENTRIC	1	
-55	0712500-18	BOOT-ACTUATOR	1	
		ATTACHING PARTS		
-56	A3053-14-27	CLAMP TIN	1	
-57	S1021Z8-6	SCREW	1	
		---*---		
-58	0712500-19	PLUG	1	

NOTE. *THIS PART NUMBER MUST HAVE A SECOND DASH NUMBER ADDED TO DENOTE COLOR. REFER TO HOW TO ORDER INTERIOR PARTS-PAGE XIII.

A---SERIAL 18051184 THRU 18051312
B---SERIAL 18051184 THRU 18051312
SERIAL 185-0001 THRU 185-0653
C---SERIAL 18051313 THRU 18051607
SERIAL 185-0654 THRU 185-0949
D---SERIAL 18051608 THRU 18052384
SERIAL 185-0950 THRU 18502310
E---SERIAL 18051184 THRU 18051607
SERIAL 185-0001 THRU 185-0949

Flight Controls (Cont)

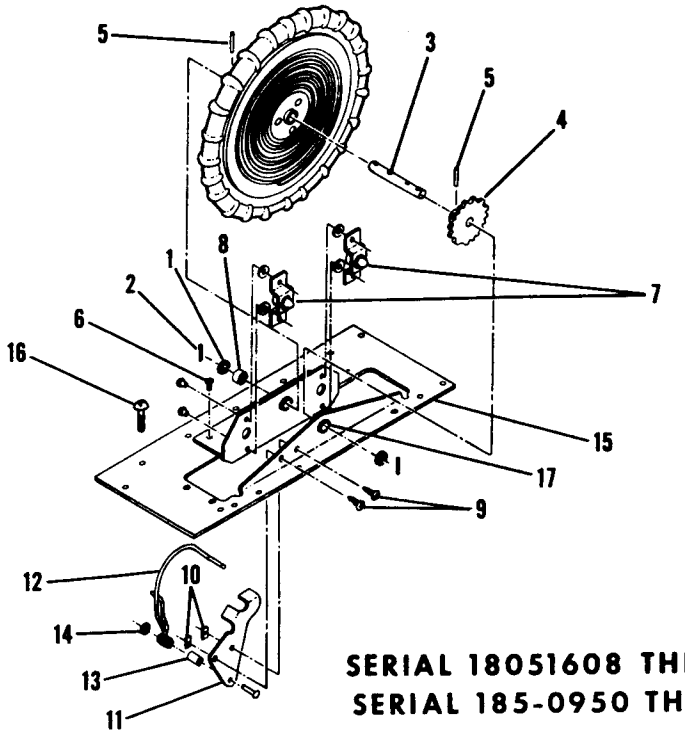

SERIAL 18051608 THRU 18052384
SERIAL 185-0950 THRU 18502310

Figure 100A. Stabilizer Trim Wheel Assembly Installation

FIGURE AND INDEX NO.	PART NUMBER	DESCRIPTION 1 2 3 4 5 6 7	UNITS PER ASSY	USABLE ON CODE
100A-		STABILIZER TRIM WHEEL ASSEMBLY INSTALLATION	NP	A
	0761205-8	WHEEL ASSEMBLY-STABILIZER TRIM	1	
		ATTACHING PARTS		
- 1	AN960C416L	WASHER	2	
- 2	NAS561-2-8	ROLLPIN	2	
		---*---		
- 3	0761205-9	SHAFT-TRIM WHEEL	1	
- 4	0761210-1	SPROCKET-TRIM WHEEL	1	
- 5	0761205-3	ROLL PIN WHEN EXHAUSTED USE NAS561-3-8	2	B
	NAS561-3-8	ROLL PIN	2	C
	0713824-3	BRACKET & LOCK ASSEMBLY	1	
		ATTACHING PARTS		
- 6	AN515-8R10	SCREW	3	
		---*---		
- 7	0713827-1	CATCH ASSEMBLY	1	
- 8	B45	BEARING TOR	1	
	0713032	INDICATOR ASSEMBLY-TRIM CONTROL	1	
		ATTACHING PARTS		
- 9	S1021Z6-6	SCREW	2	
-10	NAS446-2-3	NUT	2	
		---*---		
-11	0713032-4	GUARD-CHAIN	1	
-12	0713032-3	INDICATOR POINTER	1	
-13	0713032-1	BUSHING	1	
-14	0713032-2	COLLAR	1	
-15	0713825-3	PLATE ASSEMBLY-TRIM WHEEL	1	
		ATTACHING PARTS		
-16	AN515-8R10	SCREW	10	
		---*---		
-17	B45	BEARING TOR	1	
		A---SERIAL 18051608 THRU 18052384		
		SERIAL 185-0950 THRU 18502310		
		B---SERIAL 18051608 THRU 18052104		
		SERIAL 185-0950 THRU 18501604		
		C---SERIAL 18052105 THRU 18052384		
		SERIAL 18501605 THRU 18502310		

FIGURE AND INDEX NO.	PART NUMBER	DESCRIPTION 1 2 3 4 5 6 7	UNITS PER ASSY	USABLE ON CODE
101 -		SYSTEM INSTALLATION-PITOT	NP	A
- 1	0713163-1	INDICATOR-AIRSPEED WHEN EXHAUSTED USE S-1321N2	1	B
	S1321N2	INDICATOR-AIRSPEED	1	C
	S1471N2	INDICATOR-AIRSPEED	1	D
	S1471N9	INDICATOR-AIRSPEED WEU C661060-0202	1	G
	C661010-0202	INDICATOR-AIRSPEED	1	Y
	C661010-0210	INDICATOR-AIRSPEED	1	X
	C661010-0207	INDICATOR-TRUE AIRSPEED SEE FIGURE 68A & 68B WEU C661061-0202	1	G
	C661061-0202	INDICATOR-TRUE AIRSPEED SEE FIG 68B	1	Y
	C661061-0210	INDICATOR-TRUE AIRSPEED SEE FIG 68C	1	X
		ATTACHING PARTS		
	AN515B6R12	SCREW	4	
		---*---		
- 2	0411007-7	ALTIMETER FOR VFR APPLICATIONS ONLY WHEN EXHAUSTED USE C661011-0105	1	B
	S1314N1	ALTIMETER-20,000 FT FOR VFR APPLICATIONS ONLY WHEN EXHAUSTED USE C661011-0105	1	H
	0411007-8	ALTIMETER-SENSITIVE FOR VFR APPLICATIONS ONLY WHEN EXHAUSTED USE C661011-0105	1	B
	S1313N1	ALTIMETER-35,000 FT SENSITIVE FOR VFR APPLICATIONS ONLY WHEN EXHAUSTED USE C661011-0105	1	H
	C661011-0105	ALTIMETER-20,000 FT SENSITIVE WEU C661071-0101	1	K
	C661071-0101	ALTIMETER-20,000 FT SENSITIVE	1	V
	S1432N1	ALTIMETER-35,000 FT FEET/MILLIBARS FOR VFR APPLICATIONS ONLY WHEN EXHAUSTED USE C661011-0106	1	J
	C661011-0106	ALTIMETER-20,000 FT FEET/MILLIBARS WEU C661071-0102	1	K
	C661071-0102	ALTIMETER-20,000 FT FEET/MILLIBARS	1	V
		ATTACHING PARTS		
	AN515B6R12	SCREW	AR	
	AN3408B	NUT	AR	
	AN936B6B	WASHER	AR	
		---*---		
- 3	0411069-1 **	INDICATOR-VERTICAL SPEED WEU S1304N2	1	B
	S1304N2 **	INDICATOR-VERTICAL SPEED WEU C661080-0101	1	E
	S1392N1 **	INDICATOR-VERTICAL SPEED ALT WEU C661080-0101	1	U
	C661080-0101 **	INDICATOR-VERTICAL SPEED	1	V
		ATTACHING PARTS		
	AN515B6R12	SCREW	4	
	MS20365B632C	NUT	4	
		---*---		
- 4	**	LINE ASSEMBLY-RIGHT STATIC SOURCE TO TEE	1	
		ATTACHING PARTS		
- 5	S1138-1	TEE-NYLON	1	
	S1130-1	NUT	2	
		---*---		
	S1071-1	TUBE-POLYETHYLENE 36 IN LG BULK ITEM REF S-1071-1-36	AR	
	S1131-1	INSERT-NYLON	2	
- 6	**	LINE ASSEMBLY-TEE TO ALTIMETER	1	
		ATTACHING PARTS		
- 7	S1138-1	TEE-NYLON	1	
	S1130-1	NUT	2	
		---*---		
	S1071-1	TUBE-POLYETHYLENE 9 IN LG BULK ITEM REF S-1071-1-9	AR	
	S1131-1	INSERT-NYLON	2	
- 8	**	LINE ASSEMBLY-RIGHT STATIC TO VERTICAL SPEED	1	
		ATTACHING PARTS		
- 9	S1138-1 **	TEE-NYLON	1	
	S1130-1	NUT	2	
		---*---		
	S1071-1	TUBE-POLYETHYLENE 43 IN LG BULK ITEM REF S-1071-1-43	AR	
	S1131-1	INSERT-NYLON	2	

CONTINUED ON NEXT PAGE

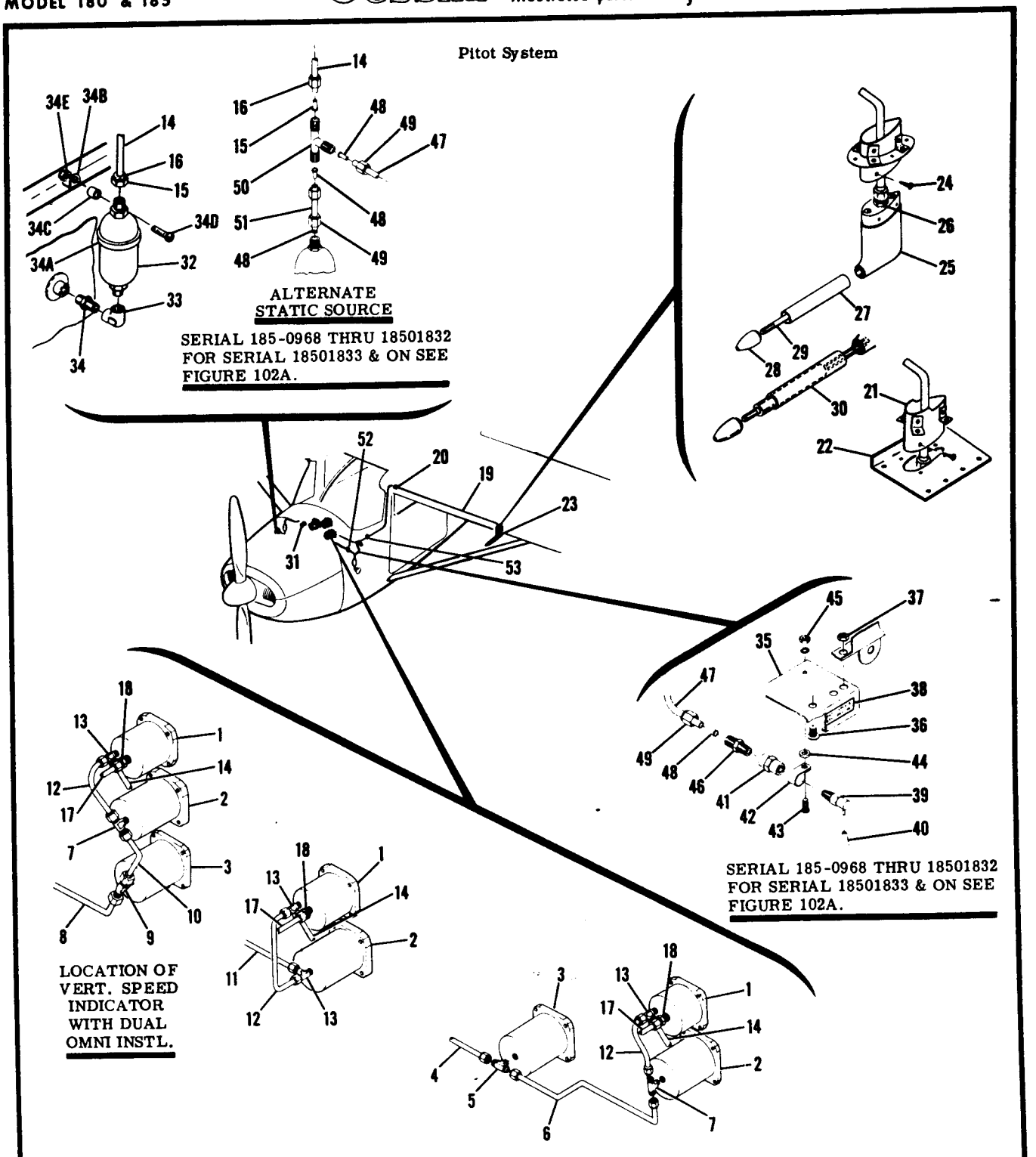

SERIAL 185-0001 THRU 18502310

Figure 101. Pitot System Installation

FIGURE AND INDEX NO.	PART NUMBER	DESCRIPTION 1 2 3 4 5 6 7	UNITS PER ASSY	USABLE ON CODE
101 -10	**	LINE ASSEMBLY-VERTICAL SPEED TO ALTIMETER	1	
	S1071-1	TUBE-POLYETHYLENE 9 IN LG BULK ITEM	AR	
		REF S-1071-1-9		
-11		LINE ASSEMBLY-RIGHT STATIC SOURCE TO ALTIMETER	1	
		TUBE-POLYETHYLENE 67 IN LG BULK ITEM	AR	
		REF S-1071-1-67		
	S1131-1	INSERT-NYLON	2	
-12		LINE ASSEMBLY-AIRSPEED INDICATOR TO ALTIMETER	1	
		ATTACHING PARTS		
-13	S1139-1	TEE-NYLON	1	
	S1135-1	ELBOW USED WITH ALT STATIC SOURCE	1	T
	S1130-1	NUT	2	
		---*---		
	S1071-1	TUBE-POLYETHYLENE 7.5 IN LG BULK ITEM	AR	
		REF S-1071-1-7.5		
	S1131-1	INSERT-NYLON	2	
-14		LINE ASSEMBLY-AIRSPEED INDICATOR-LEFT STATIC SOURCE	1	
	S1071-1	TUBE-POLYETHYLENE 12 IN LG BULK ITEM	AR	
		REF S1071-1-12		
-15	S1131-1	INSERT	1	
-16	S1130-1	NUT	1	
-17		LINE ASSEMBLY-AIRSPEED INDICATOR TO UNION IN WING	1	
		ATTACHING PARTS		
-18	S1133-1	CONNECTOR	1	
	S1130-1	NUT	1	
		---*---		
	S1071-1	TUBE-POLYETHYLENE 38 IN LG BULK ITEM	AR	
		REF S-1071-1-38		
	S1131-1	INSERT-NYLON	2	
-19		LINE ASSEMBLY-UNION IN WING TO PITOT TUBE	1	
		ATTACHING PARTS		
-20	S1132-1	UNION-NYLON	1	
	S1130-1	NUT	2	
		---*---		
	S1071-1	TUBE-52 IN LG BKI REF S1071-1-52	AR	W
	S1071-1	TUBE-63.7 IN LG BKI REF S1071-1-63.7	AR	X
	S1131-1	INSERT-NYLON	2	
-21	0721115-1	CONNECTOR ASSEMBLY-PITOT TUBE	1	
-22	0721114-1	DOUBLER	1	W
	0721114-3	DOUBLER	1	X
-23	0721105-14	TUBE ASSEMBLY-L SHAPED PITOT	1	W
	0721105-15	TUBE ASSEMBLY-L SHAPED PITOT HEATED	1	W
	0721105-39	TUBE ASSEMBLY-L SHAPED PITOT	1	X
	0721105-40	TUBE ASSEMBLY-L SHAPED PITOT HEATED	1	X
		ATTACHING PARTS		
-24	AN507-640R4	SCREW	4	
		---*---		
-25	0721105-13	BODY-PITOT TUBE	1	W
	0721105-38	BODY-PITOT TUBE	1	X
-26	S1133-2	CONNECTOR-NYLON	1	
	S1130-1	NUT	1	
-27	0721105-3	TUBE-PITOT	1	
-28	0721105-4	NOSE FITTING PITOT TUBE	1	
-29	0721105-8	STEM-PITOT TUBE	1	
-30	0721105-5	HEATER ASSEMBLY-PITOT HECA A357-3	1	W
-31	0713026-4	SWITCH-PITOT HEATER	1	X
	S2160-1	SWITCH-PITOT HEATER	1	L
	0713303-2	KNOB	1	M
	S1760-1	KNOB	1	Q
	S1981-1	KNOB	2	
-32	S1258-1	SUMP ASSEMBLY-PITOT STATIC SOURCE	1	
		ATTACHING PARTS		
-33	AN916-1D	ELBOW	1	
-34	AN911-1D	NIPPLE	1	R
-34A	MS21919DG26	CLAMP	1	R
-34B	AN743-12	BRACKET	1	R
-34C	NAS43DD4-19	SPACER	1	R
-34D	NAS603-10	SCREW	1	R
-34E	MS21044N3	NUT		
		---*---		

CONTINUED ON NEXT PAGE

FIGURE AND INDEX NO.	PART NUMBER	DESCRIPTION 1 2 3 4 5 6 7	UNITS PER ASSY	USABLE ON CODE
101 -		STATIC SOURCE INSTALLATION-ALTERNATE	NP	S
-35	0713244-1	BRACKET	1	
		ATTACHING PARTS		
-36	AN515-8R6	SCREW	2	
-37	NAS679A08	NUT	2	
		---*---		
-38	1200678-2	PLACARD WHEN EXHAUSTED USE 0505005-1	1	N
	0505005-1	PLACARD	1	P
-39	0511199-20	VALVE	1	
-40	S430-1	KNOB	1	
-41	AN910-1D	COUPLING	1	
-42	MS21919DG9	CLAMP	1	
-43	AN520-10R8	SCREW	1	
-44	AN960D10	WASHER	1	
-45	MS21044N3	NUT	1	
-46	S1133-1	CONNECTOR	1	
-47	S1071-1	TUBE-POLYETHYLENE * IN LG BULK ITEM	1	
		REF S1071-1-*		
-48	S1131-1	INSERT-NYLON	4	
-49	S1130-1	NUT-NYLON	4	
-50	S1137-1	TEE-NYLON	1	
-51	S1071-1	TUBE-POLYETHYLENE 2.00 IN LG BULK ITEM	1	
		REF S1071-1-2.00		
	SEE FIG 102A	STATIC SOURCE INSTALLATION-ALTERNATE	1	T
-52	MS21919DG4	CLAMP	1	R
		ATTACHING PARTS		
	AN525-10R6	SCREW	1	R
		---*---		
-53	MS35489-6S	GROMMET	1	

NOTE. **USED ON THESE AIRPLANES WHEN VERTICAL SPEED INDICATOR IS INSTALLED.

NOTE. *LENGTH TO BE ADDED LATER

A---SERIAL 185-0001 THRU 18502310
B---SERIAL 185-0001 THRU 185-0237
C---SERIAL 185-0238 THRU 185-0776
D---SERIAL 185-0777 THRU 185-0967 & ALSO ALTERNATE FOR S-1321N2
E---SERIAL 185-0238 THRU 18501934
F---SERIAL 185-0001 THRU 185-0967
G---SERIAL 185-0968 THRU 18501934
H---SERIAL 185-0238 THRU 185-1112
J---SERIAL 185-0001 THRU 185-1112
K---SERIAL 185-1113 THRU 18501934
L---SERIAL 185-0001 THRU 185-1300
M---SERIAL 185-1301 THRU 185-1599
N---SERIAL 185-0001 THRU 185-1447
P---SERIAL 185-1448 THRU 18501832
Q---SERIAL 18501600 THRU 18501934
R---SERIAL 18501890 THRU 18502310
S---SERIAL 185-0968 THRU 18501832
T---SERIAL 18501833 THRU 18502310
U---SERIAL 185-0001 THRU 18501934
V---SERIAL 18501935 THRU 18502310
W---SERIAL 185-0001 THRU 18502090
X---SERIAL 18502091 THRU 18502310
Y---SERIAL 18501935 THRU 18502090

Pitot System

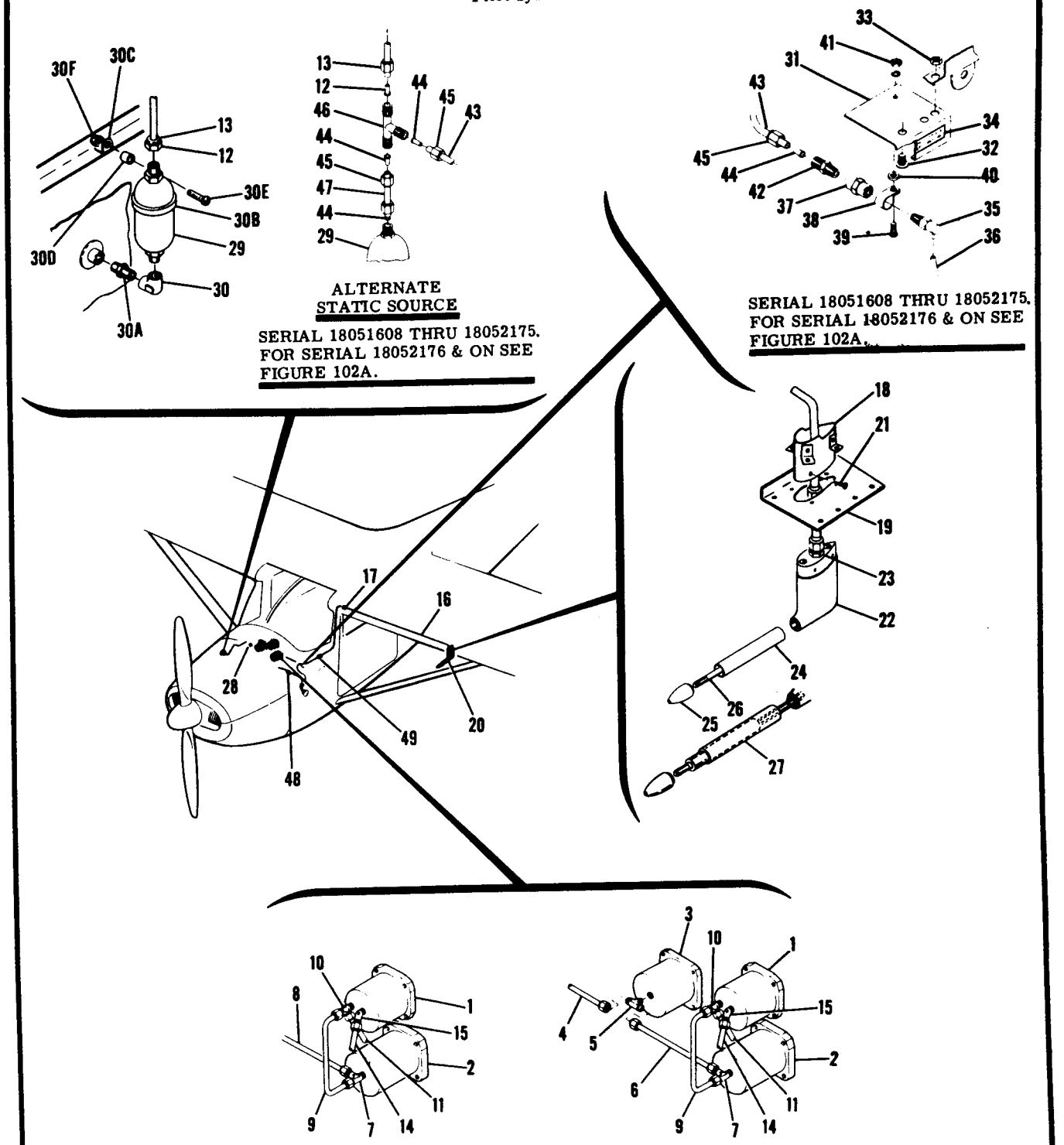

SERIAL 18051184 THRU 18052384

Figure 102. Pitot System Installation

FIGURE AND INDEX NO.	PART NUMBER	DESCRIPTION 1 2 3 4 5 6 7	UNITS PER ASSY	USABLE ON CODE
102 -		SYSTEM INSTALLATION-PITOT	NP	A
- 1	S1324N3	INDICATOR-AIRSPEED	1	B
	S1470N3	INDICATOR-AIRSPEED ALTERNATE	1	B
	S1324N6	INDICATOR-AIRSPEED	1	C
	S1470N6	INDICATOR-AIRSPEED WEU C661060-0105	1	D
	C661060-0105	INDICATOR-AIRSPEED	1	V
	C661060-0111	INDICATOR-AIRSPEED	1	S
	C661010-0201	INDICATOR-TRUE AIRSPEED SEE FIGURES 68A & 68B WEU C661061-0206	1	E
	C661061-0206	INDICATOR-TRUE AIRSPEED SEE FIG 68B	1	V
	C661061-0211	INDICATOR-TRUE AIRSPEED SEE FIG 68C	1	S
		ATTACHING PARTS		
	AN515B6R12	SCREW	4	
		---*---		
- 2	S1314N1	ALTIMETER-20,000 FT FOR VFR APPLICATIONS ONLY WHEN EXHAUSTED USE C661011-0105	1	
	S1313N1	ALTIMETER-35,000 FT SENSITIVE FOR VFR APPLICATIONS ONLY WHEN EXHAUSTED USE C661011-0105	1	F
	C661011-0105	ALTIMETER-20,000 FT SENSITIVE WEU C661071-0101	1	G
	C661071-0101	ALTIMETER-20,000 FT SENSITIVE	1	U
	S1432N1	ALTIMETER-35,000 FT FEET/MILLIBARS FOR VFR APPLICATIONS ONLY WHEN EXHAUSTED USE C661011-0106	1	F
	C661011-0106	ALTIMETER-20,000 FT FEET/MILLIBARS WEU C661071-0102	1	G
	C661071-0102	ALTIMETER-20,000 FT FEET/MILLIBARS	1	U
		ATTACHING PARTS		
	AN515B6R12	SCREW	3	
		---*---		
- 3	S1304N2	INDICATOR-VERTICAL SPEED WEU C661080-0101	1	T
	S1392N1	INDICATOR-VERTICAL SPEED ALT WEU C661080-0101	1	T
	C661080-0101	INDICATOR-VERTICAL SPEED	1	U
		ATTACHING PARTS		
	AN515B6R12	SCREW	4	
	MS20365B632C	NUT	4	
		---*---		
- 4	*	LINE ASSEMBLY-RIGHT STATIC SOURCE TO TEE	1	
		ATTACHING PARTS		
- 5	S1138-1	TEE-NYLON	1	
	S1130-1	NUT	2	
		---*---		
	S1071-1	TUBE-POLYETHLENE 36 IN. LG. BULK ITEM REF S-1071-1-36	AR	
	S1131-1	INSERT-NYLON	2	
- 6	*	LINE ASSEMBLY-TEE TO ALTIMETER	1	
		ATTACHING PARTS		
- 7	S1138-1	TEE-NYLON	1	
	S1130-1	NUT	2	
		---*---		
	S1071-1	TUBE-POLYETHYLENE 9 IN. LG. BULK ITEM REF S-1071-1-9	AR	
	S1131-1	INSERT-NYLON	2	
- 8		LINE ASSEMBLY-RIGHT STATIC SOURCE TO ALTIMETER	1	
	S1071-1	TUBE-POLYETHYLENE 67 IN. LG. BULK ITEM REF S-1071-1-67	AR	
	S1131-1	INSERT-NYLON	2	
- 9		LINE ASSEMBLY-AIRSPEED INDICATOR TO ALTIMETER	1	
		ATTACHING PARTS		
-10	S1139-1	TEE-NYLON	1	
	S1135-1	ELBOW USED WITH ALT STATIC SOURCE	1	Q
	S1130-1	NUT	2	
		---*---		
	S1071-1	TUBE-POLYETHYLENE 7.5 IN. LG. BULK ITEM REF S-1071-1-7.5	AR	
	S1131-1	INSERT-NYLON	2	
-11		LINE ASSEMBLY-AIRSPEED INDICATOR TO LEFT STATIC SOURCE	1	
	S1071-1	TUBE-POLYETHYLENE 12 IN LG BULK ITEM REF S1071-1-12	AR	
-12	S1131-1	INSERT-NYLON	2	
-13	S1130-1	NUT	2	

CONTINUED ON NEXT PAGE

FIGURE AND INDEX NO.	PART NUMBER	DESCRIPTION 1 2 3 4 5 6 7	UNITS PER ASSY	USABLE ON CODE
102 -14		LINE ASSEMBLY-AIRSPEED INDICATOR TO UNION IN WING	1	
		ATTACHING PARTS		
-15	S1133-1	CONNECTOR	1	
	S1130-1	NUT	2	
		---*---		
	S1071-1	TUBE-POLYETHYLENE 38 IN. LG. BULK ITEM	AR	
		REF S-1071-1-38		
	S1131-1	INSERT-NYLON	2	
-16		LINE ASSEMBLY-UNION IN WING TO PITOT TUBE	1	
		ATTACHING PARTS		
-17	S1132-1	UNION-NYLON	1	
	S1130-1	NUT	1	
		---*---		
	S1071-1	TUBE-52 IN LG BKI REF S1071-1-52	AR	R
	S1071-1	TUBE-63.7 IN LG BKI S1071-1-63.7	AR	S
	S1131-1	INSERT NYLON	2	
-18	0721115-1	CONNECTOR ASSEMBLY-PITOT TUBE	1	
-19	0721114-1	DOUBLER	1	R
	0721114-3	DOUBLER	1	S
-20	0721105-14	TUBE ASSEMBLY-L SHAPED PITOT	1	R
	0721105-15	TUBE ASSEMBLY-L SHAPED PITOT HEATED	1	R
	0721105-39	TUBE ASSEMBLY-L SHAPED PITOT	1	S
	0721105-40	TUBE ASSEMBLY-L SHAPED PITOT HEATED	1	S
		ATTACHING PARTS		
-21	AN507-640R4	SCREW	4	
		---*---		
-22	0721105-13	BODY-PITOT TUBE	1	R
	0721105-38	BODY-PITOT TUBE	1	S
-23	S1133-2	CONNECTOR-NYLON	1	
	S1130-1	NUT	1	
-24	0721105-3	TUBE-PITOT	1	
-25	0721105-4	NOSE FITTING-PITOT TUBE	1	
-26	0721105-8	STEM-PITOT TUBE	1	
-27	0721105-5	HEATER ASSEMBLY-PITOT HECA A357-3	1	
-28	0713026-4	SWITCH-PITOT HEATER	1	R
	S1260-1	SWITCH-PITOT HEATER	1	S
	0713303-2	KNOB	1	H
	S1760-1	KNOB	1	J
	S1918-1	KNOB	1	M
-29	S1258-1	SUMP ASSEMBLY-PITOT STATIC SOURCE	1	
		ATTACHING PARTS		
-30	AN916-1D	ELBOW	1	
-30A	AN911-1D	NIPPLE	1	
-30B	MS21919DG26	CLAMP	1	N
-30C	NAS743-12	BRACKET	1	N
-30D	NAS43DD4-19	SPACER	1	N
-30E	NAS603-10	SCREW	1	N
-30F	MS21044N3	NUT	1	N
		---*---		
		STATIC SOURCE INSTALLATION-ALTERNATE	NP	P
-31	0713244-1	BRACKET	1	
		ATTACHING PARTS		
-32	AN515-8R6	SCREW	2	
-33	NAS679A08	NUT	2	
		---*---		
-34	1200678-2	PLACARD WHEN EXHAUSTED USE 0505005-1	1	K
	0505005-1	PLACARD	1	L
-35	0511199-20	VALVE	1	
-36	S430-1	KNOB	1	
-37	AN910-1D	COUPLING	1	
-38	MS21919DG9	CLAMP	1	
-39	AN520-10R8	SCREW	1	

CONTINUED ON NEXT PAGE

FIGURE AND INDEX NO.	PART NUMBER	DESCRIPTION 1 2 3 4 5 6 7	UNITS PER ASSY	USABLE ON CODE
102 -40	AN960D10	WASHER	1	
-41	MS21044N3	NUT	1	
-42	S1133-1	CONNECTOR	1	
-43	S1071-1	TUBE-POLYETHYLENE # IN LG BULK ITEM REF S1071-1-#	1	
-44	S1131-1	INSERT-NYLON	4	
-45	S1130-1	NUT-NYLON	4	
-46	S1137-1	TEE-NYLON	1	
-47	1071-1	TUBE-POLYETHYLENE 2.00 IN LG BULK ITEM REF S1071-1-2.00	1	
	SEE FIG 102A	STATIC SOURCE INSTALLATION-ALTERNATE SEE FIG 102A	1	Q
-48	MS21919DG4	CLAMP	1	N
		ATTACHING PARTS		
	AN525-10R6	SCREW	1	N
		---*---		
-49	MS35489-6S	GROMMET	1	

NOTE. *USED ON THESE AIRPLANES WHEN VERTICAL SPEED INDICATOR IS INSTALLED.

NOTE. #LENGTH TO BE ADDED LATER

A---SERIAL 18051184 THRU 18052384
B---SERIAL 18051184 THRU 18051312
C---SERIAL 18051313 THRU 18051445
D---SERIAL 18051446 THRU 18052221 &
ALSO ALTERNATE FOR S1324N6
E---SERIAL 18051608 THRU 18052221
F---SERIAL 18051184 THRU 18051763
G---SERIAL 18051764 THRU 18052221
H---SERIAL 18051184 THRU 18051875
J---SERIAL 18051876 THRU 18052103
K---SERIAL 18051608 THRU 18051993
L---SERIAL 18051994 THRU 18052175
M---SERIAL 18052104 THRU 18052284
N---SERIAL 18052203 THRU 18052384
P---SERIAL 18051608 THRU 18052175
Q---SERIAL 18052176 THRU 18052384
R---SERIAL 18051184 THRU 18052284
S---SERIAL 18052285 THRU 18052384
T---SERIAL 18051184 THRU 18052221
U---SERIAL 18052222 THRU 18052384
V---SERIAL 18052222 THRU 18052284

Pitot System (Cont)

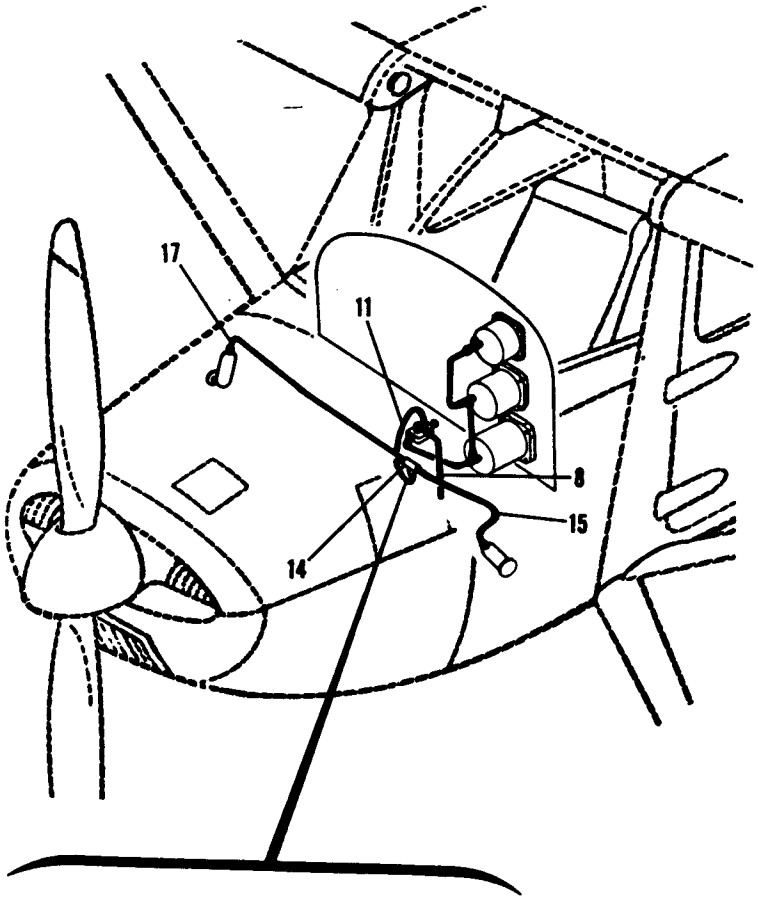

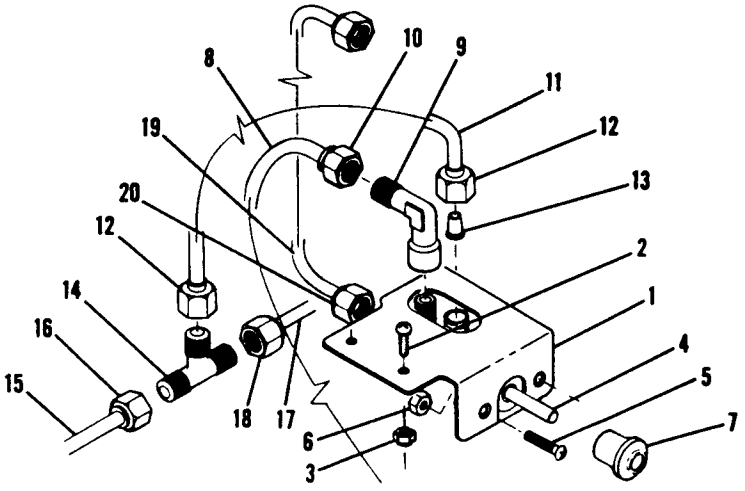

SERIAL 18501833 THRU 18502310
SERIAL 18052176 THRU 18052384

Figure 102A. Alternate Static Source Installation

FIGURE AND INDEX NO.	PART NUMBER	DESCRIPTION 1 2 3 4 5 6 7	UNITS PER ASSY	USABLE ON CODE
102A-		ALTERNATE STATIC SOURCE INSTALLATION	NP	A
- 1	0701028-2	BRACKET-ALTERNATE STATIC SOURCE VALVE	2	
		ATTACHING PARTS	2	
- 2	AN515-8R6	SCREW	2	
- 3	NAS679A08	NUT		
		---*---	1	B
- 4	S2116-1	VALVE-ALTERNATE STATIC SOURCE WEU 2013142-1	1	C
	2013142-1	VALVE-ALTERNATE STATIC SOURCE		
		ATTACHING PARTS	2	
- 5	AN509-8R6	SCREW	2	
- 6	NAS679A08	NUT		
		---*---	1	
- 7	S1981-5	KNOB	1	
- 8	S1071-1-6	TUBE-ALTERNATE SOURCE		
		ATTACHING PARTS	1	
- 9	S2071-1	ELBOW	1	
-10	S1130-1	NUT	1	
	S1131-1	INSERT		
		---*---	1	
-11	S1071-1	TUBE-STANDARD SOURCE * IN LG BKI REF S1071-1-*		
		ATTACHING PARTS	2	
-12	S1130-1	NUT	2	
-13	S1131-1	INSERT		
		---*---	1	
-14	S1137-1	TEE	1	
-15	S1071-1	TUBE-LH SUMP * IN LG BKI REF S1071-1-*		
		ATTACHING PARTS	2	
-16	S1130-1	NUT	2	
	S1131-1	INSERT		
		---*---	1	
-17	S1071-1	TUBE-RH SUMP * IN LG BKI REF S1071-1-*		
		ATTACHING PARTS	2	
-18	S1130-1	NUT	2	
	S1131-1	INSERT		
		---*---	1	
-19	S1071-1	TUBE-VALVE TO VERTICAL SPEED INDICATOR * IN LG BKI REF S1071-1-*		
		ATTACHING PARTS	1	
-20	S1130-1	NUT	1	
	S1131-1	INSERT		
		---*---		

NOTE. *LENGTH TO BE DETERMINED LATER

A---SERIAL 18052176 THRU 18052384
SERIAL 18501833 THRU 18502310
B---SERIAL 18052176 THRU 18052213
SERIAL 18501833 THRU 18501925
C---SERIAL 18052214 THRU 18052384
SERIAL 18501926 THRU 18502310

Stall Warning

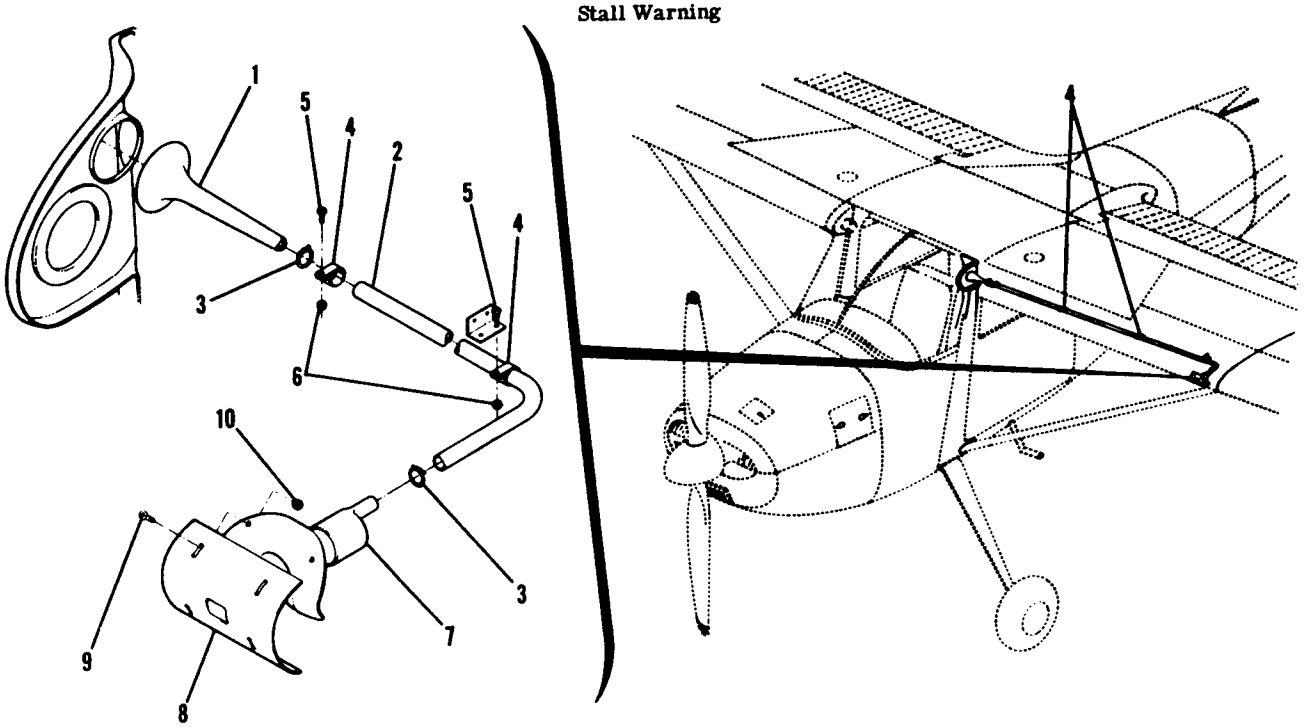

SERIAL 185-1198, 185-1199, 185-1201 THRU 18502310
SERIAL 18051824 THRU 18052384

Figure 102B. Stall Warning Horn Installation

FIGURE AND INDEX NO.	PART NUMBER	DESCRIPTION 1 2 3 4 5 6 7	UNITS PER ASSY	USABLE ON CODE
102B-		STALL WARNING HORN INSTALLATION	NP	A
- 1	0413483-1	HORN ASSEMBLY-STALL WARNING	1	
- 2	S1071-4	TUBE BKT	AR	
		ATTACHING PARTS		
- 3	S1494-8	CLAMP	2	
- 4	AN742D8	CLAMP	4	
- 5	S1021Z6-6	SCREW	4	
- 6	NAS395-5-3	NUT	4	
		---*---		
- 7	0413485-1	SCOOP ASSEMBLY-STALL WARNING	1	D
	0413028-10	SCOOP ASSEMBLY-STALL WARNING	1	E
	0413485-2	SCREEN	1	
	0413028-5	SEAL-FELT	1	
- 8	0413028-4	SCOOP PLATE-STALL WARNING	1	B
	0413028-8	SCOOP PLATE-STALL WARNING	1	C
	0413028-9	SCOOP PLATE-STALL WARNING	1	E
		ATTACHING PARTS		
- 9	S1021Z8-8	SCREW	4	
-10	NAS395-18-1	NUT	4	
		---*---		

A---SERIAL 185-1189, 185-1199, 185-1201 THRU 18502310
SERIAL 18051824 THRU 18052384
B---SERIAL 185-1189, 185-1199, 185-1201 THRU 18501969
SERIAL 18051824 THRU 18052233
C---SERIAL 18501970 THRU 18502090
SERIAL 18052234 THRU 18052284
D---SERIAL 185-1189, 185-1199, 185-1201 THRU 18502090
SERIAL 18051824 THRU 18052284
E---SERIAL 18502091 THRU 18502310
SERIAL 18052285 THRU 18052384

FIGURE AND INDEX NO.	PART NUMBER	DESCRIPTION 1 2 3 4 5 6 7	UNITS PER ASSY	USABLE ON CODE
103 -		FUEL SYSTEM INSTALLATION	NP	G
- 1	SEE FIG 107	AUXILIARY FUEL PUMPS & STRAINER INSTALLATION	1	
- 2	0716109-1	VALVE-FUEL SEE FIGURE 111	1	
		ATTACHING PARTS		
- 3	AN525-832R8	SCREW	2	
- 4	NAS679A08	NUT	2	
		---*---		
- 5	AN821-6D	ELBOW	2	
- 6	0500106-326	LINE ASSEMBLY-FUEL LH LOWER	1	
- 7	0500106-322	LINE ASSEMBLY-FUEL RH LOWER	1	
- 8	0500106-346	LINE ASSEMBLY-FUEL UPPER	2	
		ATTACHING PARTS		
- 9	S1485D6U	CLAMP	2	
	S1021Z8-10	SCREW	2	
-10	AN815-6D	UNION	2	
		---*---		
-11	AN834-6D	TEE	4	C
	AN924-6D	NUT	2	C
	AN929-6	PLUG	1	
-12	0500106-324	LINE ASSEMBLY-FUEL LH	1	
-13	0500106-320	LINE ASSEMBLY-FUEL RH	1	
-14	0500106-331	LINE-FUEL	2	
-15	S51-6	HOSE-2.50 IN LG BULK ITEM REF S-51-6-10		
		ATTACHING PARTS		
-16	NAS397-12	CLAMP	2	
		---*---		
-17	0716108-1	TEE	1	A
-19	0500106-328	LINE ASSEMBLY-FUEL	1	B
	0500106-354	LINE ASSEMBLY-FUEL	1	
-20	0500106-321	LINE ASSEMBLY-FUEL		
		ATTACHING PARTS		
-21	AN742D6	CLAMP	2	
	S1021Z8-10	SCREW	1	
-22	AN815-6D	UNION	1	
		---*---		
-23	0500106-327	LINE ASSEMBLY-FUEL	1	A
	0500106-353	LINE ASSEMBLY-FUEL	1	B
		ATTACHING PARTS		
-24	AN815-6D	UNION	1	
-25	MS20822-6D	ELBOW	1	
		---*---		
-26	0500106-325	LINE ASSEMBLY-FUEL		
		ATTACHING PARTS		
-27	AN742D6	CLAMP	1	
	S1021Z8-10	SCREW	1	
-28	AN815-6D	UNION	1	
		---*---		
-29	0500106-333	LINE ASSEMBLY-FUEL DRAIN	1	E
	0500106-357	LINE ASSEMBLY-FUEL DRAIN	1	F
		ATTACHING PARTS		
-30	AN834-6D	TEE	1	E
-31	AN833-6D	ELBOW	1	F
	AN837-6D	ELBOW	2	
	AN924-6D	NUT		
		---*---		

CONTINUED ON NEXT PAGE

Fuel System

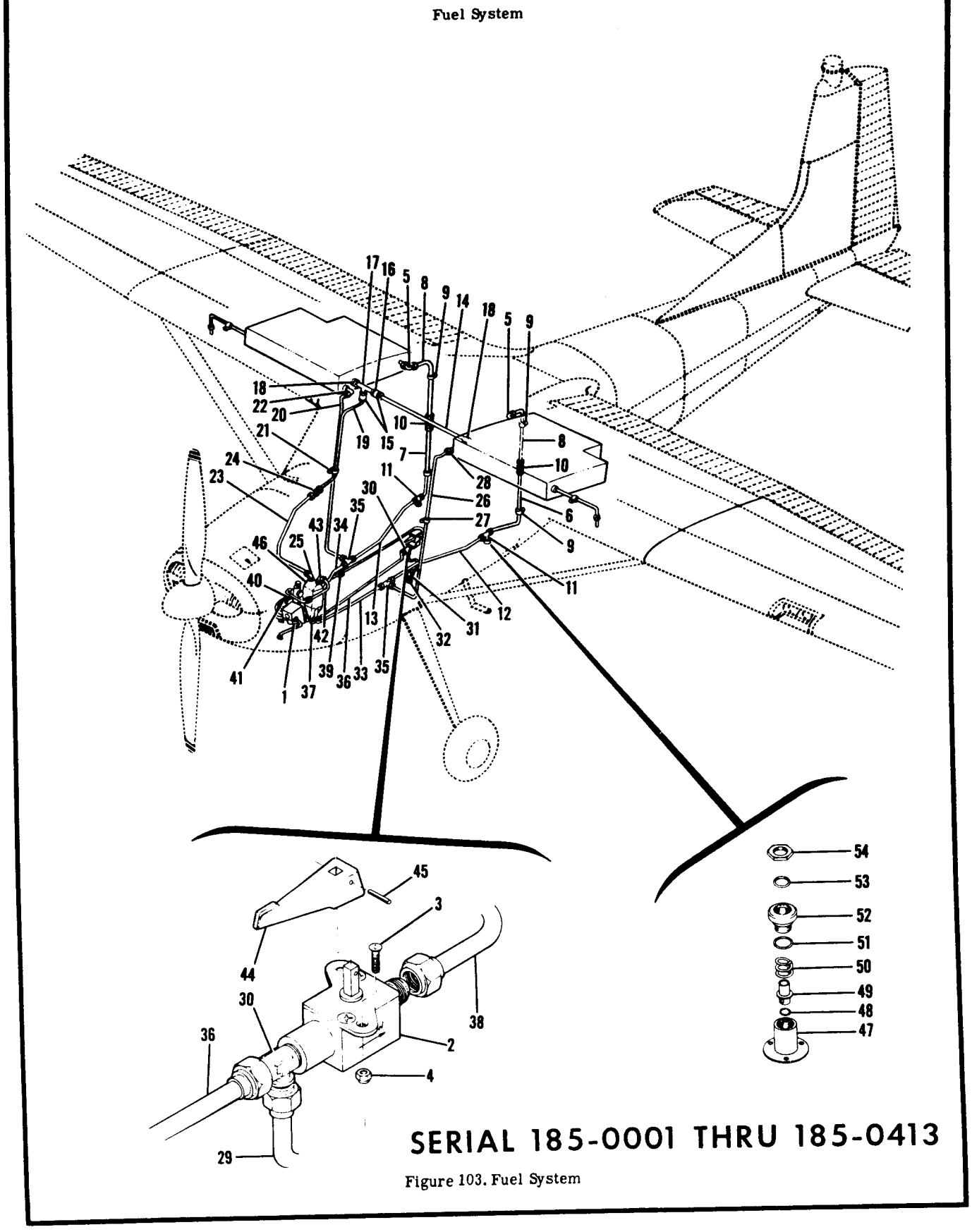

SERIAL 185-0001 THRU 185-0413

Figure 103. Fuel System

FIGURE AND INDEX NO.	PART NUMBER	DESCRIPTION 1 2 3 4 5 6 7	UNITS PER ASSY	USABLE ON CODE
103 -32	AN929-6	PLUG	1	
-33	0500106-323	LINE ASSEMBLY-FUEL LH	1	
-34	0500106-319	LINE ASSEMBLY-FUEL RH	1	
		ATTACHING PARTS		
-35	AN824-6D	TEE	1	
		---*---		
-36	0500106-329	LINE ASSEMBLY-FUEL	1	
		ATTACHING PARTS		
-37	MS20823-6D	ELBOW	1	
		---*---		
-38	0500106-330	LINE ASSEMBLY-FUEL	1	
		ATTACHING PARTS		
-39	AN815-6D	UNION	1	
		---*---		
-40	0500106-340	LINE ASSEMBLY-FUEL	1	
		ATTACHING PARTS		
-41	AN816-6D	NIPPLE	1	
	AN960-416L	WASHER	1	
		---*---		
-42	0500106-332	LINE ASSEMBLY-FUEL	1	
		ATTACHING PARTS		
-43	MS20822-4-4D	ELBOW	1	
	AN924-4D	NUT	1	
	AN960-416L	WASHER	1	
		---*---		
-44	0716612-2	HANDLE-FUEL VALVE	1	
		ATTACHING PARTS		
-45	NAS561C2-10	PIN-SLOTTED	1	
		---*---		
-46	0713158-1	TANK ASSEMBLY-VAPOR SEPARATOR & FUEL ACCUMULATOR	1	
		ATTACHING PARTS		
	AN4-3A	BOLT	8	
	AN960-10L	WASHER	8	
		---*---		
	NAS687A3	NUTPLATE	8	
	0716110-1	VALVE ASSEMBLY-DRAIN	1	D
-47		BODY-VALVE ASSEMBLY	NP	
-48	MS29513-10	O RING	1	
-49	209AC	POPPET VALVE AADC	1	
-50	723A	SPRING AADC	1	
-51	MS29513-18	O RING	1	
-52	721A7	FITTING AADC	1	
-53	MS29513-16	O RING	1	
-54	721A8	NUT AADC	1	

A---SERIAL 185-0001 THRU 185-0146
B---SERIAL 185-0417 THRU 185-0413
C---SERIAL 185-0001 THRU 185-0244
D---SERIAL 185-0245 THRU 185-0413
E---SERIAL 185-0001 THRU 185-0157
F---SERIAL 185-0158 THRU 185-0413
G---SERIAL 185-0001 THRU 185-0413

Fuel System (Cont)

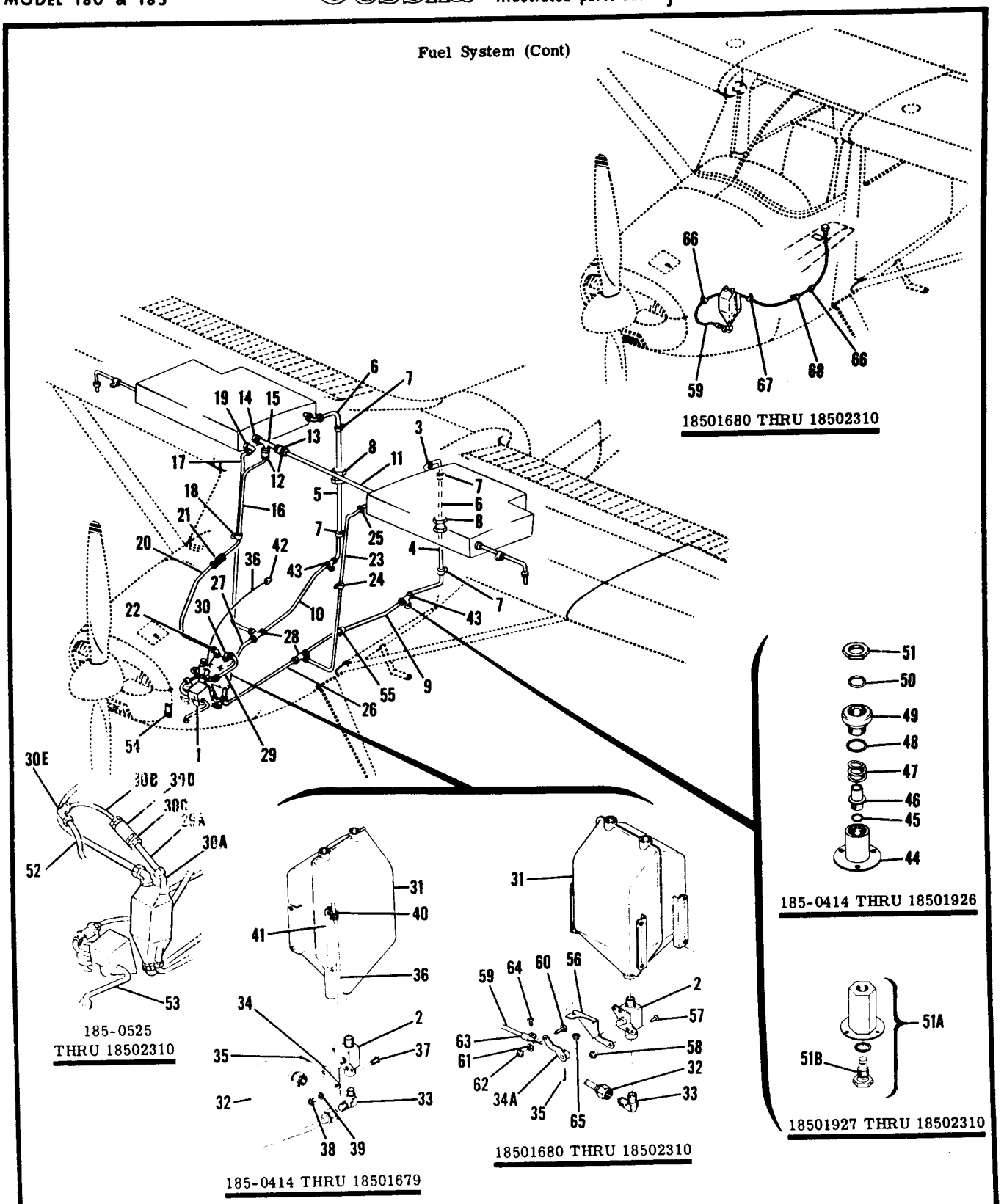

SERIAL 185-0414 THRU 18502310

Figure 104. Fuel System Installation

FIGURE AND INDEX NO.	PART NUMBER	DESCRIPTION 1 2 3 4 5 6 7	UNITS PER ASSY	USABLE ON CODE
104 -		FUEL SYSTEM INSTALLATION	NP	A
- 1	SEE FIG 108	AUXILIARY FUEL PUMPS & STRAINER INSTALLATION	1	
- 2	0716111-1	VALVE-FUEL AVAILABLE AS AN ASSY ONLY	1	
- 3	AN821-6D	ELBOW	2	
- 4	0500106-326	LINE ASSEMBLY-FUEL LH LOWER	1	
- 5	0500106-322	LINE ASSEMBLY-FUEL RH LOWER	1	
- 6	0500106-346	LINE ASSEMBLY-FUEL UPPER	2	
		ATTACHING PARTS		
- 7	S1485D6U	CLAMP	2	
	S1021Z8-10	SCREW	2	
- 8	AN815-6D	UNION	2	
		---*---		
- 9	0500106-324	LINE ASSEMBLY-FUEL LH	1	
-10	0500106-320	LINE ASSEMBLY-FUEL RH	1	
-11	0500106-331	LINE-FUEL VENT	1	B
	0700087-10	LINE-FUEL VENT	1	C
		ATTACHING PARTS		
-12	S1495-6	HOSE-3.00 IN LG BULK ITEM REF S1495-6-3.00	2	
-13	NAS397-12	CLAMP	4	
-14	S1891-10	CLAMP	2	
		---*---		
-15	0716108-1	TEE	1	
-16	0500106-354	LINE ASSEMBLY-FUEL	1	
-17	0500106-321	LINE ASSEMBLY-FUEL	1	
		ATTACHING PARTS		
-18	AN742D6	CLAMP	2	
	S1021Z8-10	SCREW	2	
-19	AN815-6D	UNION	1	
		---*---		
-20	0500106-353	LINE ASSEMBLY-FUEL	1	
		ATTACHING PARTS		
-21	AN815-6D	UNION	1	
-22	MS20822-6D	ELBOW	1	
		---*---		
-23	0500106-325	LINE ASSEMBLY-FUEL	1	
		ATTACHING PARTS		
-24	AN742D6	CLAMP	1	
	S1021Z8-10	SCREW	1	
-25	AN815-6D	UNION	1	
		---*---		
-26	0500106-363	LINE-FUEL	1	
-27	0500106-362	LINE-FUEL	1	
		ATTACHING PARTS		
-28	AN824-6D	TEE	1	D
		---*---		
-29	0500106-332	LINE ASSEMBLY-FUEL	1	K
-29A	0700087-15	LINE ASSEMBLY-FUEL	1	L
	0700147-11	LINE ASSEMBLY-FUEL	1	D
		ATTACHING PARTS		
-30	MS20822-4-4D	ELBOW	1	D
	AN924-4D	NUT	1	D
	AN960-416L	WASHER	1	E
-30A	MS20823-4D	ELBOW	1	E
	AN912-1	ADAPTER	1	K
		---*---		
-30B	0700087-16	LINE ASSEMBLY-FUEL	1	L
	0700147-12	LINE ASSEMBLY-FUEL	1	E
-30C	AN818-4D	NIPPLE	1	E
-30D	0850375-1	SWING CHECK VALVE	1	F
-30E	AN833-4D	ELBOW	1	E
	AN924-4D	NUT	1	
-31	0713158-8	TANK ASSEMBLY-VAPOR SEPARATOR & FUEL ACCUMULATOR	8	
		ATTACHING PARTS		
	AN4-3A	BOLT	8	
	AN960-10L	WASHER	8	
		---*---		
	NAS687A3	NUTPLATE	1	M
-32	0500106-361	LINE-FUEL	1	N
	0700147-13	LINE-FUEL	1	
		ATTACHING PARTS		
-33	MS20822-6D	ELBOW		
		---*---		

CONTINUED ON NEXT PAGE

FIGURE AND INDEX NO.	PART NUMBER	DESCRIPTION 1 2 3 4 5 6 7	UNITS PER ASSY	USABLE ON CODE
104 -34	0716606-1	ARM-FUEL VALVE	1	T
-34A	0716606-6	ARM-FUEL VALVE	1	U
		ATTACHING PARTS		
-35	MS24665-134	PIN-COTTER	1	
		---*---		
-36	S1241-8	CONTROL-FUEL VALVE	1	F
	S1241-9	CONTROL-FUEL VALVE	1	G
	S1241-17	CONTROL-FUEL VALVE	1	P
	S1241-38	CONTROL-FUEL VALVE	1	S
		ATTACHING PARTS		
-37	0450311-5	CLAMP	1	
-38	MS21044N3	NUT	1	
-39	AN960-10	WASHER	1	
-40	MS21919DG4	CLAMP	1	
-41	0550100-6	BRACKET	1	
		---*---		
-42	0756001-13	BRACKET-FUEL VALVE CONTROL SUPPORT	1	F
-43	MS20825-6D	TEE	2	
	0716110-1	VALVE ASSEMBLY-DRAIN WEU 0716169-1	2	V
-44		BODY-VALVE ASSEMBLY	NP	V
-45	MS29513-10	O RING	1	V
-46	209AC	POPPET VALVE AADC	1	V
-47	723A	SPRING AADC	1	V
-48	MS29513-18	O RING	1	V
-49	721A7	FITTING AADC	1	V
-50	MS29513-16	O RING	1	V
-51	721A8	NUT AADC	1	V
-51A	0716169-1	VALVE ASSEMBLY-FUEL DRAIN	2	W
		BODY-VALVE	NP	W
-51B	S2020-1	VALVE-FUEL DRAIN INCLUDES GASKET	1	W
-52	S1236-4-0144	HOSE ASSEMBLY	1	
-53	S1167-6-0270	HOSE ASSEMBLY	1	
-54	MS25253-1	SWITCH-THROTTLE	1	H
	S1913-1	ACTUATOR	1	H
	E33-10K	SWITCH & ACTUATOR-THROTTLE GYRE	1	J
		ATTACHING PARTS		
	AN515-4R10	SCREW	2	J
	NAS679A04	NUT	2	J
	0750232-1	ARM RETAINER-MICROSWITCH	1	X
		---*---		
-55	S1592-2A	CLAMP	1	Q
		ATTACHING PARTS		
	S1021Z6-8	SCREW	1	Q
		---*---		
	CM2679-2	TIE STRAP	2	R
	S1930-1	BRACKET	1	R
		ATTACHING PARTS		
	AN525-832R8	SCREW	1	R
	NAS679A08	NUT	1	R
		---*---		
-56	0716632-1	CLAMP BRACKET	1	U
		ATTACHING PARTS		
-57	AN520-10R6	SCREW	2	U
-58	MS21044N3	NUT	2	U
		---*---		

CONTINUED ON NEXT PAGE

FIGURE AND INDEX NO.	PART NUMBER	DESCRIPTION 1 2 3 4 5 6 7	UNITS PER ASSY	USABLE ON CODE
104 -59	S1241-40	CONTROL-FUEL VALVE	1	U
		ATTACHING PARTS		
-60	0450311	CLAMP	1	U
-61	AN960-10L	WASHER	1	U
-62	MS21044N3	NUT	1	U
-63	AN742D4	CLAMP	1	U
-64	AN520-10R5	SCREW	1	U
-65	MS21044N3	NUT	2	U
-66	AN742D4	CLAMP	2	U
	S1021Z8-8	SCREW	2	U
	NAS446-4	NUTPLATE	1	U
-67	AN742D4	CLAMP	1	U
	S1021Z8-8	SCREW	1	U
	S1153-1	NUTPLATE	1	U
-68	MS21919DG3	CLAMP	1	U
	AN520-10R6	SCREW	1	U
	MS21044N3	NUT		
		---*---		
		A---SERIAL 185-0414 THRU 18502310		
		B---SERIAL 185-0414 THRU 185-0512		
		C---SERIAL 185-0513 THRU 18502310		
		D---SERIAL 185-0414 THRU 185-0524		
		E---SERIAL 185-0525 THRU 18502310		
		F---SERIAL 185-0414 THRU 185-0776		
		G---SERIAL 185-0777 THRU 185-1300		
		H---SERIAL 185-0414 THRU 185-0967		
		J---SERIAL 185-0968 THRU 18502007, 18502026, 18502027		
		K---SERIAL 185-0525 THRU 185-0788		
		L---SERIAL 185-0789 THRU 18502310		
		M---SERIAL 185-0414 THRU 185-0843		
		N---SERIAL 185-0844 THRU 18502310		
		P---SERIAL 185-1301 THRU 185-1599		
		Q---SERIAL 185-0414 THRU 185-1441		
		R---SERIAL 185-1442 THRU 18502310		
		S---SERIAL 18501600 THRU 18501679		
		T---SERIAL 185-0414 THRU 18501679		
		U---SERIAL 18501680 THRU 18502310		
		V---SERIAL 185-0414 THRU 18501926		
		W---SERIAL 18501927 THRU 18502310		
		X---SERIAL 18501916 THRU 18502007, 18502026, 18502027		

Fuel System (Cont)

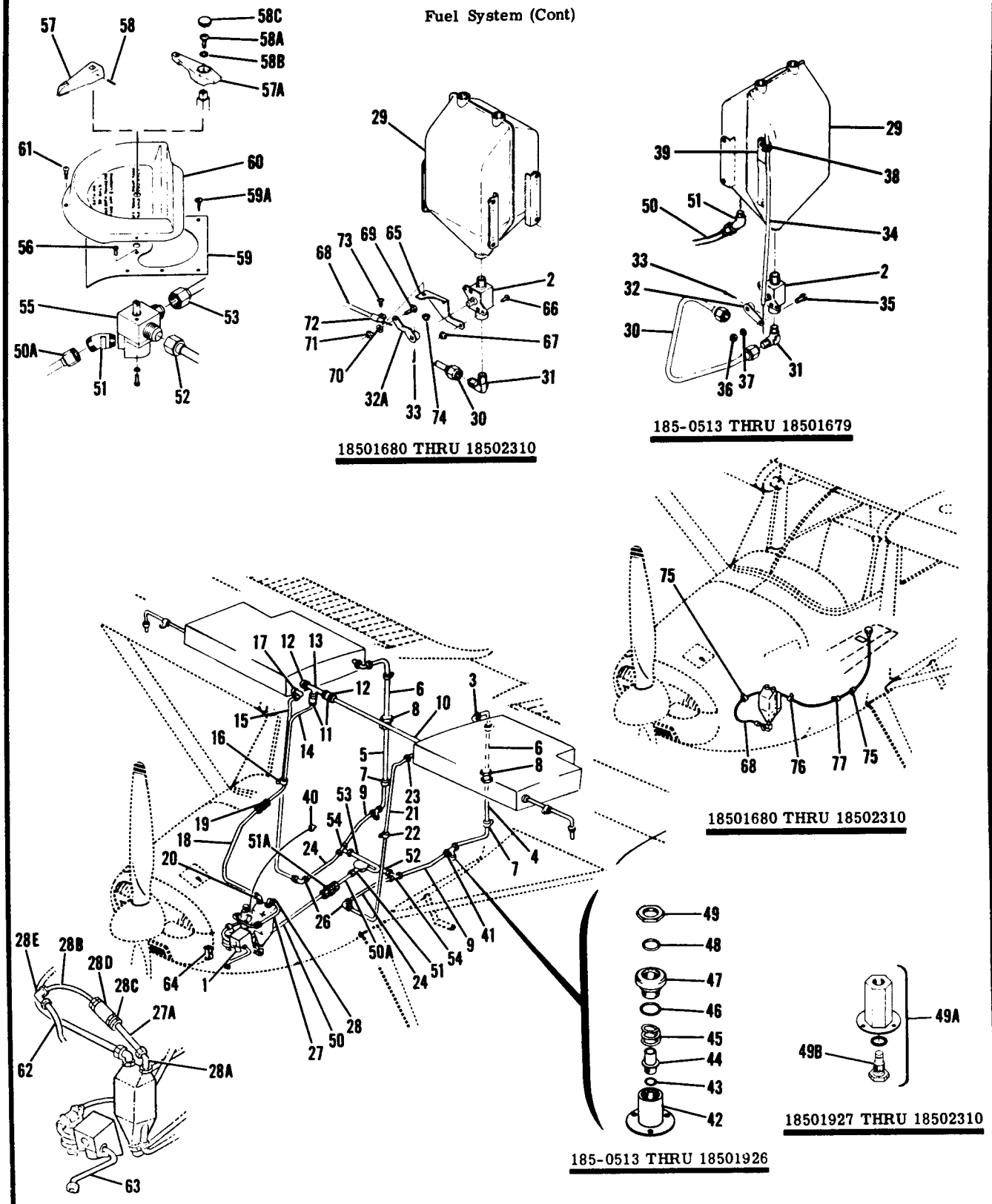

18501680 THRU 18502310

185-0513 THRU 18501679

18501680 THRU 18502310

185-0525 THRU 18502310

185-0513 THRU 18501926

18501927 THRU 18502310

SERIAL 185-0513 THRU 18502310

Figure 105. Fuel System - Selectable Tank

FIGURE AND INDEX NO.	PART NUMBER	DESCRIPTION 1 2 3 4 5 6 7	UNITS PER ASSY	USABLE ON CODE
105 -		FUEL SYSTEM INSTALLATION-SELECTABLE TANK	NP	A
- 1	SEE FIG 108	AUXILIARY FUEL PUMPS & STRAINER INSTALLATION	1	
- 2	0716111-1	VALVE-FUEL AVAILABLE AS AN ASSY ONLY	1	
- 3	AN821-6D	ELBOW	2	
- 4	0500106-326	LINE ASSEMBLY-FUEL LH LOWER	1	
- 5	0500106-322	LINE ASSEMBLY-FUEL RH LOWER	1	
- 6	0500106-346	LINE ASSEMBLY-FUEL UPPER	2	
		ATTACHING PARTS		
- 7	S1485D6U	CLAMP	2	
	S1021Z8-10	SCREW	2	
- 8	AN815-6D	UNION	2	
		---*---		
- 9	0700087-1	LINE ASSEMBLY-FUEL LH	1	
-10	0700087-10	LINE-FUEL VENT	2	
		ATTACHING PARTS		
-11	S1495-6	HOSE-3.00 IN LG BULK ITEM REF S1495-6-3.00	6	
-12	NAS397-12	CLAMP	1	
		---*---		
-13	0716108-1	TEE	1	
-14	0500106-354	LINE ASSEMBLY-FUEL	1	
-15	0500106-321	LINE ASSEMBLY-FUEL	2	
		ATTACHING PARTS		
-16	AN742D6	CLAMP	2	
	S1021Z8-10	SCREW	1	
-17	AN815-6D	UNION	1	
		---*---		
-18	0500106-353	LINE ASSEMBLY-FUEL	1	
		ATTACHING PARTS		
-19	AN815-6D	UNION	1	
-20	MS20822-6D	ELBOW	1	
		---*---		
-21	0500106-325	LINE ASSEMBLY-FUEL	1	
		ATTACHING PARTS		
-22	AN742D6	CLAMP	1	
	S1021Z8-10	SCREW	1	
-23	AN815-6D	UNION	2	
		---*---		
-24	0700087-2	LINE ASSEMBLY-FUEL		
-25		DELETED, NEVER USED		
		ATTACHING PARTS	1	
-26	AN821-6D	ELBOW	1	B
		---*---	1	F
-27	0500106-332	LINE ASSEMBLY-FUEL	1	G
-27A	0700087-15	LINE ASSEMBLY-FUEL	1	B
	0700147-11	LINE ASSEMBLY-FUEL	1	B
		ATTACHING PARTS	1	C
-28	MS20822-4-4D	ELBOW	1	C
	AN924-4D	NUT	1	
	AN960-416L	WASHER	1	C
-28A	MS20823-4D	ELBOW	1	C
	AN912-1	ADAPTER	1	F
		---*---	1	G
-28B	0700087-16	LINE ASSEMBLY-FUEL	1	C
	0700147-12	LINE ASSEMBLY-FUEL	1	C
-28C	AN816-4D	NIPPLE	1	C
-28D	0850375-1	SWING CHECK VALVE	1	C
-28E	AN833-4D	ELBOW	1	
	AN924-4D	NUT	1	
-29	0713158-9	TANK ASSEMBLY-VAPOR SEPARATOR & FUEL ACCUMULATOR		
		ATTACHING PARTS	8	
	AN3-3A	BOLT	8	
	AN960-10L	WASHER	8	
		---*---	1	H
	NAS682A3	NUTPLATE	1	J
-30	0500106-361	LINE-FUEL	1	
	0700147-13	LINE-FUEL	1	R
-31	MS20822-6D	ELBOW	1	S
-32	0716606-1	ARM-FUEL VALVE	1	
-32A	0716606-6	ARM-FUEL VALVE		
		ATTACHING PARTS	1	
-33	MS24665-145	PIN-COTTER		
		---*---		

CONTINUED ON NEXT PAGE

FIGURE AND INDEX NO.	PART NUMBER	DESCRIPTION 1 2 3 4 5 6 7	UNITS PER ASSY	USABLE ON CODE
105 -34	S1241-8	CONTROL-FUEL VALVE	1	D
	S1241-9	CONTROL-FUEL VALVE	1	N
	S1241-17	CONTROL-FUEL VALVE	1	Q
	S1241-38	CONTROL-FUEL VALVE	1	E
		ATTACHING PARTS		
-35	0450311	CLAMP	1	
-36	MS21044N3	NUT	1	
-37	AN960-10L	WASHER	1	
-38	MS21919DG4	CLAMP	1	
-39	0550100-6	BRACKET	1	D
		---*---		
-40	0756001-13	BRACKET-FUEL VALVE CONTROL SUPPORT	2	
-41	MS20825-6D	TEE	2	T
	0716110-1	VALVE ASSEMBLY-DRAIN WEU 0716169-1	NP	T
-42		BODY-VALVE ASSEMBLY	1	T
-43	MS29513-10	O RING	1	T
-44	209AC	POPPET VALVE AADC	1	T
-45	723A	SPRING AADC	1	T
-46	MS29513-18	O RING	1	T
-47	721A7	FITTING AADC	1	T
-48	MS29513-16	O RING	1	T
-49	721A8	NUT AADC	2	U
-49A	0716169-1	VALVE ASSEMBLY-FUEL DRAIN	NP	U
		BODY-VALVE	1	U
-49B	S2020-1	VALVE-FUEL DRAIN INCLUDES GASKET	1	
-50	0700087-13	LINE-FUEL	1	
-50A	0700087-14	LINE-FUEL	2	
-51	MS20823-8D	ELBOW	1	
-51A	AN815-8D	UNION	1	
-52	0700087-4	LINE-FUEL LH	1	
-53	0700087-5	LINE-FUEL RH	1	
		ATTACHING PARTS		
-54	AN917-3D	TEE	1	
	AN816-6-6D	NIPPLE	2	
	AN816-8D	NIPPLE	1	
		---*---		
-55	0716613-3	VALVE-FUEL TANK SELECTOR	1	M
	0716613-4	VALVE-FUEL TANK SELECTOR	1	P
		ATTACHING PARTS		
-56	AN515-10R5	SCREW	2	
	AN960PD10L	WASHER	2	
		---*---		
-57	0716612-204	HANDLE-FUEL VALVE	1	M
-57A	0716623-2	HANDLE-FUEL VALVE	1	P
		ATTACHING PARTS		
-58	NAS561P2-10	ROLL PIN	1	M
-58A	AN525-8R7	SCREW	1	P
-58B	AN936A8	WASHER	1	P
		---*---		
-58C	0716624-1	COVER-FUEL SELECTOR HANDLE	1	P
-59	0716115-1	COVER PLATE	1	V
	0716115-2	COVER PLATE	1	W
		ATTACHING PARTS		
-59A	S1021Z8-6	SCREW	6	V
	S1021Z8-6	SCREW	8	W
	NAS395-16-3	NUT	6	V
	NAS395-16-3	NUT	8	W
		---*---		

CONTINUED ON NEXT PAGE

FIGURE AND INDEX NO.	PART NUMBER	DESCRIPTION 1 2 3 4 5 6 7	UNITS PER ASSY	USABLE ON CODE
105 -60	0716114-1 ¤	COVER-FUEL TANK SELECTOR STANDARD TANKS	1	
	0716114-3 ¤	COVER-FUEL TANK SELECTOR LONG RANGE TANKS	1	
		ATTACHING PARTS	3	
-61	S1021Z8-8C	SCREW	1	
		---*---	1	
-62	S1236-4-0144	HOSE ASSEMBLY	1	K
-63	S1167-6-0270	HOSE ASSEMBLY	1	K
-64	MS25253-1	SWITCH-THROTTLE	1	L
	S1913-1	ACTUATOR	1	L
	E33-10K	SWITCH & ACTUATOR-THROTTLE GYRE	2	L
		ATTACHING PARTS	2	L
	AN515-4R10	SCREW	1	X
	NAS679A04	NUT	1	S
	0750232-1	ARM RETAINER-MICROSWITCH	2	S
		---*---	2	S
-65	0716632-2	CLAMP BRACKET	1	S
		ATTACHING PARTS	1	S
-66	AN520-10R6	SCREW	1	S
-67	MS21044N3	NUT	1	S
		---*---	1	S
-68	S1241-40	CONTROL-FUEL VALVE	1	S
		ATTACHING PARTS	1	S
-69	0450311	CLAMP	1	S
-70	AN960-10L	WASHER	1	S
-71	MS21044N3	NUT	1	S
-72	AN742D4	CLAMP	1	S
-73	AN520-10R5	SCREW	2	S
-74	MS21044N3	NUT	2	S
-75	AN742D4	CLAMP	2	S
	S1021Z8-8	SCREW	1	S
	NAS446-4	NUTPLATE	1	S
-76	AN742D4	CLAMP	1	S
	S1021Z8-8	SCREW	1	S
	S1153-1	NUTPLATE	1	S
-77	MS21919DG3	CLAMP	1	S
	AN520-10R6	SCREW	1	S
	MS21044N3	NUT		
		---*---		

NOTE. ¤THIS PART NUMBER MUST HAVE A SECOND DASH NUMBER ADDED TO DENOTE COLOR. REFER TO HOW TO ORDER INTERIOR PARTS-PAGE XIII.

A---SERIAL 185-0513 THRU 18502310
B---SERIAL 185-0513 THRU 185-0524
C---SERIAL 185-0525 THRU 18502310
D---SERIAL 185-0513 THRU 185-0776
E---SERIAL 18501600 THRU 18501679
F---SERIAL 185-0525 THRU 185-0788
G---SERIAL 185-0789 THRU 18502310
H---SERIAL 185-0414 THRU 185-0843
J---SERIAL 185-0844 THRU 18502310
K---SERIAL 185-0414 THRU 185-0967
L---SERIAL 185-0968 THRU 18502007, 18502026, 18502027
M---SERIAL 185-0513 THRU 185-1300
N---SERIAL 185-0777 THRU 185-1300
P---SERIAL 185-1301 THRU 18502310
Q---SERIAL 185-1301 THRU 185-1599
R---SERIAL 185-0513 THRU 18501679
S---SERIAL 18501680 THRU 18502310
T---SERIAL 185-0513 THRU 18501926
U---SERIAL 18501927 THRU 18502310
V---SERIAL 185-0513 THRU 18501943
W---SERIAL 18501944 THRU 18502310
X---SERIAL 18501916 THRU 18502007, 18502026, 18502027

Fuel System (Cont)

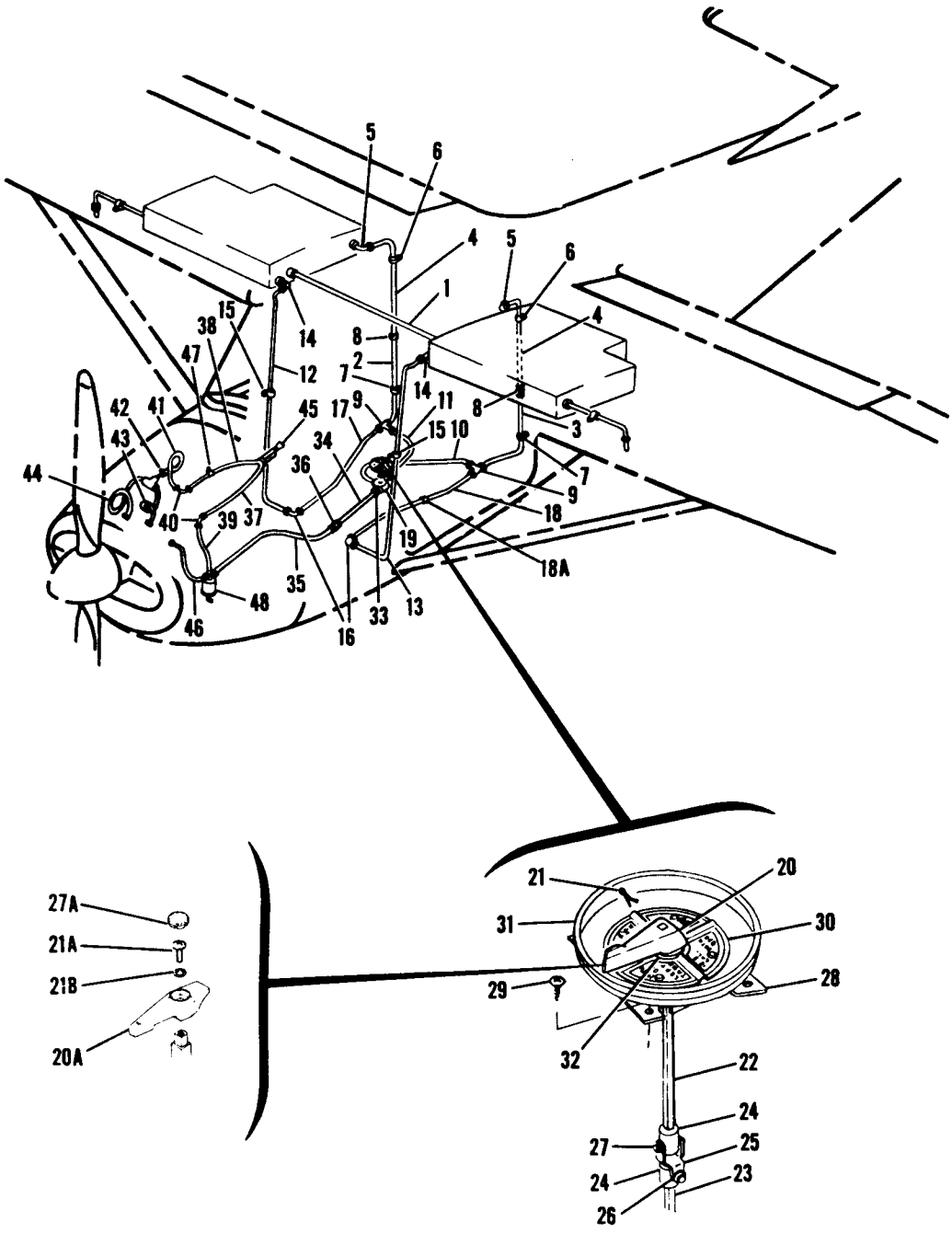

SERIAL 18051184 THRU 18052384

Figure 106. Fuel System Installation

FIGURE AND INDEX NO.	PART NUMBER	DESCRIPTION 1 2 3 4 5 6 7	UNITS PER ASSY	USABLE ON CODE
106 -		FUEL SYSTEM INSTALLATION	NP	A
- 1	0700087-9	LINE-LEFT TANK TO RIGHT TANK VENT	1	
		ATTACHING PARTS		
	S1891-10	CLAMP	2	
		---*---		
- 2	0500106-322	LINE ASSEMBLY-FUEL RH LOWER AFT	1	
- 3	0500106-326	LINE ASSEMBLY-FUEL LH LOWER AFT	1	
- 4	0500106-346	LINE ASSEMBLY-FUEL UPPER AFT	2	
		ATTACHING PARTS		
- 5	AN821-6D	ELBOW	1	
	S1485D6U	CLAMP	2	
- 6	S1021Z6-6	SCREW UPPER CLAMP	2	
- 7	S1021Z8-8	SCREW LOWER CLAMP	2	
		---*---		
- 8	AN815-6D	UNION	2	
- 9	AN824-6D	TEE	2	
-10	0500106-359	LINE-FUEL LH TEE TO FUEL SELECTOR	1	
	0700087-12	LINE-FUEL LH TEE TO FUEL SELECTOR USED WITH CENTER LINE CAMERA INSTALLATION ONLY	1	
-11	0500106-358	LINE-FUEL RH TEE TO FUEL SELECTOR	1	
-12	0500106-321	LINE-FUEL RH TANK TO ELBOW FORWARD	1	
-13	0500106-325	LINE-FUEL LH TANK TO ELBOW FORWARD	1	
		ATTACHING PARTS		
-14	AN815-6D	UNION	1	
-15	AN742D6	CLAMP TIN	1	
	S1021Z8-8	SCREW	1	
		---*---		
-16	AN821-6D	ELBOW	2	
-17	0500106-320	LINE-FUEL RH ELBOW TO TEE	1	
-18	0500106-324	LINE-FUEL LH ELBOW TO TEE	1	
		ATTACHING PARTS		
-18A	S1592-2A	CLAMP UC	1	
	S1021Z6-8	SCREW	1	
		---*---		
-19	0311070-1	VALVE ASSEMBLY-FUEL SELECTOR SEE FIGURE 112	1	
		ATTACHING PARTS		
	AN515-8R8	SCREW	2	
		---*---		
	0511157-20	HANDLE ASSEMBLY-FUEL SELECTOR	1	J
	0713316-1	HANDLE ASSEMBLY-FUEL SELECTOR	1	K
-20	0716612-202	HANDLE-FUEL SELECTOR	1	J
-20A	0716623-2	HANDLE-FUEL SELECTOR	1	K
		ATTACHING PARTS		
-21	NAS561-2-10	PIN-SLOTTED	1	J
-21A	AN525-8R7	SCREW	1	K
-21B	AN936A8	WASHER	1	K
		---*---		
-22	0511157-18	SHAFT-UPPER	1	J
	0713316-2	SHAFT-UPPER	1	K
-23	0511157-17	SHAFT-LOWER	1	
-24	0511194-4	PIVOT	2	
		ATTACHING PARTS		
-25	0511127	SPACER	1	
-26	AN960-6	WASHER	2	
-27	0425134	PIN	1	
		---*---		
-27A	0716624-1	COVER-FUEL SELECTOR HANDLE	1	K
-28	0716102	BRACKET-FUEL SELECTOR	1	
		ATTACHING PARTS		
-29	AN515-8R8	SCREW	4	
		---*---		
-30	S1286-3	PLATE ASSEMBLY-FUEL SELECTOR 60 GAL BLACK	1	
	S1286-1	PLATE ASSEMBLY-FUEL SELECTOR 60 GAL BROWN	1	
	S1286-4	PLATE ASSEMBLY-FUEL SELECTOR 79 GAL BLACK	1	
	S1286-2	PLATE ASSEMBLY-FUEL SELECTOR 79 GAL BROWN	1	
-31	0511198	CUP	1	J
-32	0511195	GUIDE-SHAFT	3	
-33	0511196-1	ADAPTER-FUEL SELECTOR VALVE	1	
	MS20913-1	PLUG	1	
-34	0500106-99	LINE-FUEL SELECTOR VALVE TO UNION	1	
-35	0500106-205	LINE-FUEL UNION TO FUEL STRAINER	1	

CONTINUED ON NEXT PAGE

FIGURE AND INDEX NO.	PART NUMBER	DESCRIPTION 1 2 3 4 5 6 7	UNITS PER ASSY	USABLE ON CODE
106 -36	AN815-8D	UNION	1	
-37	0500106-121	LINE PRIMER TO FIREWALL LH	1	B
	0700087-29	LINE-PRIMER TO FIREWALL LH WHEN EXHAUSTED USE 0700147-51	1	C
	0700147-51	LINE-PRIMER TO FIREWALL LH	1	C
-38	0500106-122	LINE PRIMER TO FIREWALL RH	1	B
	0700087-30	LINE-PRIMER TO FIREWALL RH WHEN EXHAUSTED USE 0700147-52	1	C
	0700147-52	LINE-PRIMER TO FIREWALL RH	1	C
-39	0500106-202	LINE-PRIMER STRAINER TO FIREWALL FITTING	1	F
	0700147-14	LINE-PRIMER STRAINER TO FIREWALL FITTING	1	G
	0700147-17	LINE-PRIMER STRAINER TO FIREWALL FITTING WHEN EXHAUSTED USE 0700147-47	1	H
	0700147-47	LINE-PRIMER STRAINER TO FIREWALL FITTING	1	H
		ATTACHING PARTS		
-40	AN833-2D	ELBOW	2	
	AN960D516	WASHER	2	
	AN924-2D	NUT	2	
		---*---		
-41	0500106-133	LINE-PRIMER FIREWALL TO BAFFLES WHEN EXHAUSTED USE 0700099-82	1	D
	0700099-82	LINE-PRIMER FIREWALL TO BAFFLES	1	D
		ATTACHING PARTS		
-42	MS21919DG2	CLAMP	1	
	S1021Z8-6	SCREW	1	
	NAS446-4-3	NUT	1	
		---*---		
-43	0500106-196	LINE-PRIMER	1	D
-44	0500106-197	LINE-PRIMER	1	D
	SEE FIG 118A	PRIMER LINES	NP	E
-45	0311538-12	PRIMER ASSEMBLY WHEN EXHAUSTED USE C291502-0101	1	J
	C291502-0101	PRIMER ASSEMBLY-ENGINE	1	L
	C291502-0103	PRIMER ASSEMBLY-ENGINE	1	M
	S1240-5	KNOB-PRIMER	1	J
	S1752-1	KNOB	1	L
	S1974-1	KNOB	1	M
-46	S1167-8-0120	HOSE ASSEMBLY FUEL STRAINER TO CARBURETOR	1	
		ATTACHING PARTS		
	AN915-2	ELBOW	1	
		---*---		
-47	MS21919DG2	CLAMP	1	B
	S1155-2	CLAMP	2	C
		ATTACHING PARTS		
	NAS446-4-3	NUT	1	
	S1021Z8-6	SCREW	1	
		---*---		
-48		STRAINER INSTALLATION SEE FIGURES 110 & 110A	1	
		A---SERIAL 18051184 THRU 18052384		
		B---SERIAL 18051184 THRU 18051445		
		C---SERIAL 18051446 THRU 18052384		
		D---SERIAL 18051184 THRU 18051312		
		E---SERIAL 18051313 THRU 18052384		
		F---SERIAL 18051184 THRU 18051496		
		G---SERIAL 18051497 THRU 18051774		
		H---SERIAL 18051775 THRU 18052384		
		J---SERIAL 18051184 THRU 18051875		
		K---SERIAL 18051876 THRU 18052384		
		L---SERIAL 18051876 THRU 18052103		
		M---SERIAL 18052104 THRU 18052384		

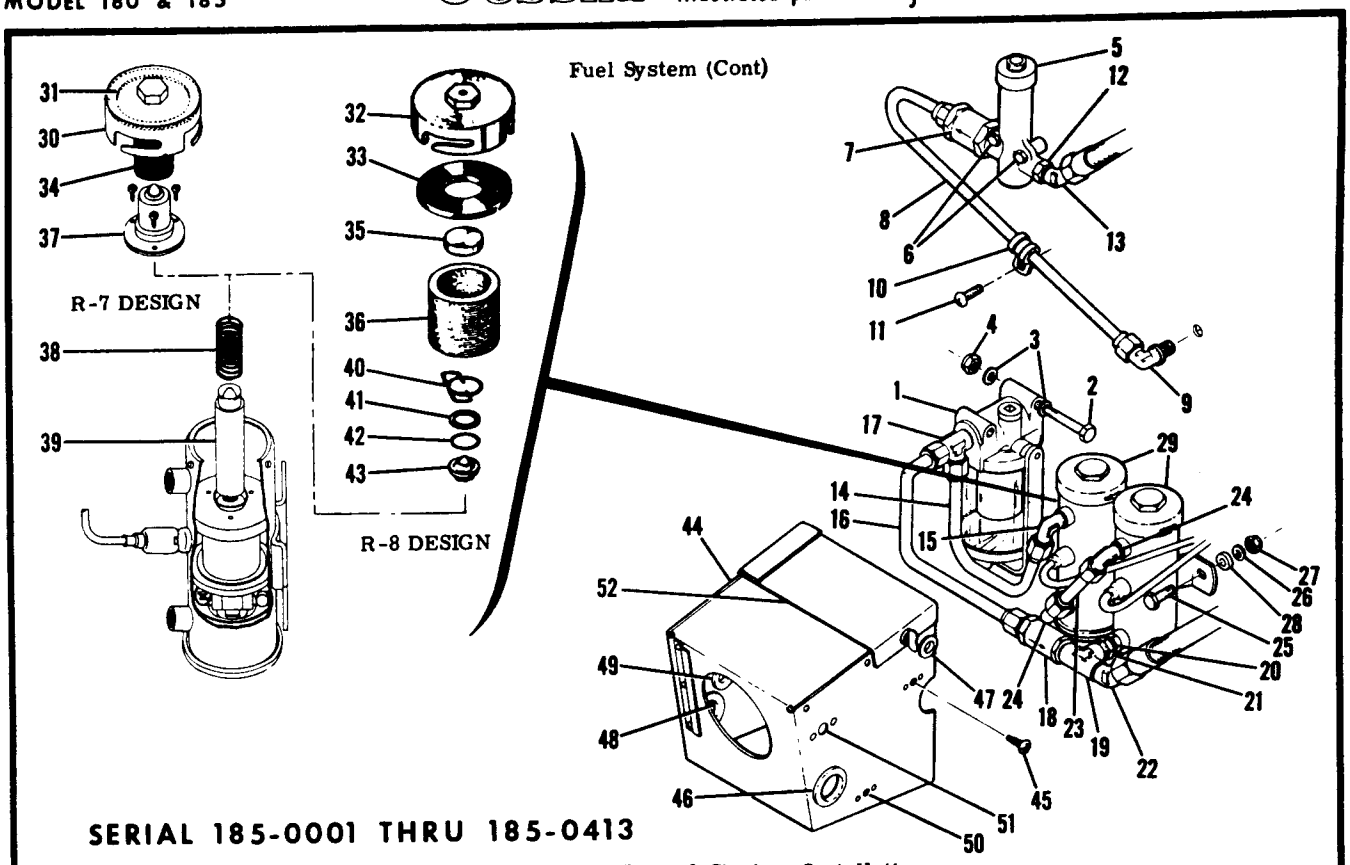

Figure 107. Fuel Pump & Strainer Installation

FIGURE AND INDEX NO.	PART NUMBER	DESCRIPTION 1 2 3 4 5 6 7	UNITS PER ASSY	USABLE ON CODE
107 -		AUXILIARY FUEL PUMPS & STRAINER INSTALLATION	NP	A
- 1	0511199-45	STRAINER ASSEMBLY-FUEL SEE FIGURE 109	1	
		ATTACHING PARTS		
- 2	AN4-13A	BOLT	2	
- 3	AN960-416L	WASHER	4	
- 4	NAS679A4	NUT	2	
		---*---		
- 5	AV2B1371	VALVE-SOLENOID GCO	1	
	A76	VALVE-SOLENOID HFP ALT	1	
		ATTACHING PARTS		
- 6	AN3-14A	BOLT	2	
	NAS43DD3-24	SPACER	2	
	NAS679AA3	NUT	2	
		---*---		
- 7	1111-517700	VALVE-CHECK PAET	1	
	MS29512-4	GASKET	1	
- 8	0500106-337	LINE ASSEMBLY-FUEL	1	
		ATTACHING PARTS		
- 9	AN833-4D	ELBOW	1	
-10	AN742D4	CLAMP	1	
-11	S1021Z8-10	SCREW	1	
	NAS446-4-3	NUT	1	
		---*---		

CONTINUED ON NEXT PAGE

FIGURE AND INDEX NO.	PART NUMBER		DESCRIPTION 1 2 3 4 5 6 7	UNITS PER ASSY	USABLE ON CODE
107 -12	AN924-4D		NUT	1	
-13	AN833-4D		ELBOW	1	
-14	0500106-335		LINE ASSEMBLY-FUEL	1	
			ATTACHING PARTS		
-15	MS20822-6-2D		ELBOW	1	
			---*---		
-16	0500106-334		LINE ASSEMBLY-FUEL	1	
			ATTACHING PARTS		
-17	MS20826-6D		TEE	1	
			---*---		
-18	485-6D		VALVE-CHECK REPM	1	
-19	AN917-2D		TEE	1	
-20	AN911-1D		NIPPLE	1	
-21	AN912-1D		BUSHING	1	
-22	MS20823-6D		ELBOW	1	
-23	0500106-336		LINE ASSEMBLY-FUEL	1	
			ATTACHING PARTS		
-24	MS20822-6-2D		ELBOW	2	
			---*---		
-25	AN4-5A		BOLT	3	
-26	AN960-416L		WASHER	3	
-27	NAS679A4		NUT	3	
-28	S355-1		SPACER	1	
-29	1216012-1		PUMP-FUEL	2	
-30	ECM476563	*	COVER & GASKET ASSEMBLY ECM	1	
-31	ECM475594	*	GASKET-COVER ECM	1	
-32	ECM479130	#	COVER ECM	1	
-33	ECM479136	#	GASKET-COVER ECM	1	
-34	ECM475634	*	SCREEN ECM	1	
-35	ECM479012	#	MAGNET ECM	1	
-36	ECM479135	#	FILTER ECM	1	
-37	ECM476364	*	CUP-PLUNGER SPRING ECM	1	
-38	ECM475127	*	SPRING-PLUNGER ECM	1	
-39	ECM476474	*	PLUNGER ASSEMBLY ECM	1	
-40	ECM479137	#	RETAINER ECM	1	
-41	ECM479138	#	WASHER ECM	1	
-42	ECM479139	#	O RING ECM	1	
-43	ECM479132	#	CUP VALVE ECM	1	
-44	0716104-1		SHIELD ASSEMBLY-AUXILIARY PUMP	1	
			ATTACHING PARTS		
-45	S1021Z10-10		SCREW	4	
			---*---		
-46	MS35489-17		GROMMET	1	
-47	MS35489-6		GROMMET	1	
-48	MS35489-20		GROMMET	1	
-49	MS35489-14S		GROMMET	1	
-50	NAS444-8-3		NUTPLATE	3	
-51	312-12		RECEPTACLE CAMLOC	2	
-52	0716104-2		COVER ASSEMBLY	1	
	28S7-4		STUD CAMLOC	1	
	26R8-2		SHIM-RECEPTACLE	1	

NOTE. *PARTS MARKED WITH ASTERISK ARE BENDIX R-7 DESIGN.

NOTE. #PARTS MARKED WITH POUND SIGN ARE BENDIX R-8 DESIGN.

A---SERIAL 185-0001 THRU 185-0413

Fuel System (Cont)

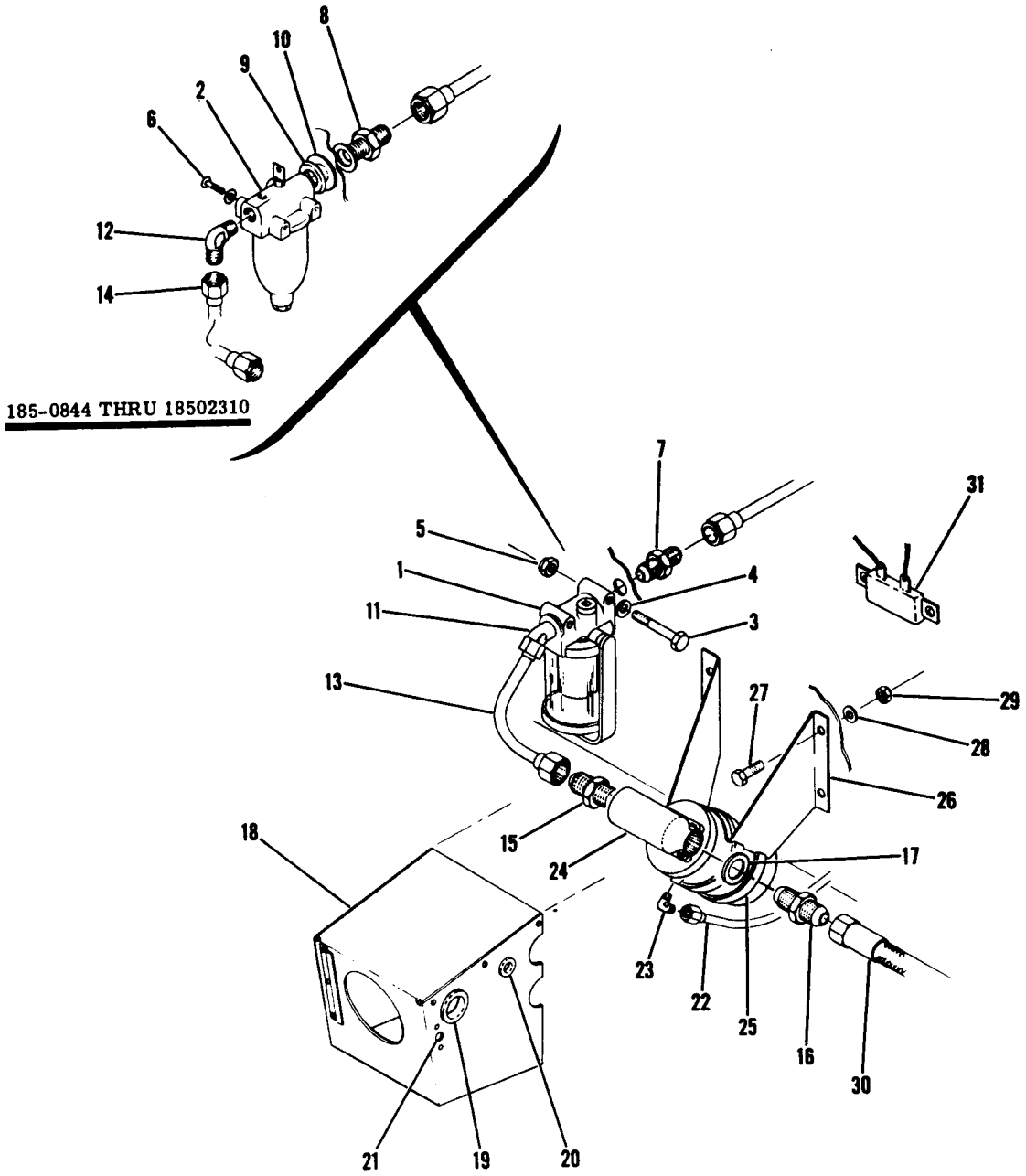

SERIAL 185-0414 THRU 18502310

Figure 108. Auxillary Fuel Pump & Strainer Installation

FIGURE AND INDEX NO.	PART NUMBER	DESCRIPTION 1 2 3 4 5 6 7	UNITS PER ASSY	USABLE ON CODE
108 -		AUXILLARY FUEL PUMP & STRAINER INSTALLATION	NP	A
- 1	0511199-45	STRAINER ASSEMBLY-FUEL SEE FIGURE 109	1	B
- 2	0756005-3	STRAINER ASSEMBLY-FUEL SEE FIGURE 110A	1	C
		ATTACHING PARTS		
- 3	AN4-13A	BOLT	2	B
- 4	AN960-416L	WASHER	2	B
- 5	NAS679A4	NUT	2	B
- 6	MS20074-03-3	BOLT	2	C
	AN936A10	WASHER	2	C
		---*---		
- 7	AN816-6D	NIPPLE	1	B
- 8	AN816-6-6D	NIPPLE	1	C
	0513186-1	SHIELD	1	B
- 9	0750032-1	SHIELD	1	C
	AN960-616L	WASHER	1	B
	S354-2	GROMMET	1	B
-10	S354-3	GROMMET	1	C
-11	MS20823-6D	ELBOW	1	B
-12	MS20822-6-6D	ELBOW	1	C
-13	0700087-7	LINE ASSEMBLY-FUEL	1	B
-14	0700147-15	LINE ASSEMBLY-FUEL	1	C
-15	AN815-6D	UNION	1	
-16	AN832-6D	UNION	1	
-17	MS29512-6	GASKET	2	
-18	0716130-1	SHIELD ASSEMBLY	1	
		ATTACHING PARTS		
	S1021Z10-10	SCREW	3	
		---*---		
-19	MS35489-17	GROMMET	2	
-20	MS35489-6	GROMMET	2	
-21	312-12	RECEPTACLE CLC	1	
	26R8-2	SHIM-RECEPTACLE CLC	1	
-22	0700087-8	LINE ASSEMBLY-FUEL	1	
-23	TF10052	ELBOW	1	
-24	4140-00-17	PUMP-FUEL DUKA	1	
		ATTACHING PARTS		
-25	AN737TW91	CLAMP	2	
-26	0716129-1	BRACKET	1	
-27	AN4-5A	BOLT	4	
-28	AN960-416L	WASHER	4	
-29	NAS679A4	NUT	4	
		---*---		
-30	S1167-6-0270	HOSE ASSEMBLY-FUEL TO ENGINE PUMP	1	
-31	MOR20-2	RESISTOR FUEL PUMP	1	D
	MZ0020-31AV	RESISTOR FUEL PUMP	2	E
		ATTACHING PARTS		
	AN515-6R8	SCREW	2	D
	AN515-4R12	SCREW	2	E
		---*---		
		A---SERIAL 185-0414 THRU 18502310		
		B---SERIAL 185-0414 THRU 185-0843		
		C---SERIAL 185-0844 THRU 18502310		
		D---SERIAL 185-0414 THRU 18502090		
		E---SERIAL 18502091 THRU 18502310		

Fuel System (Cont)

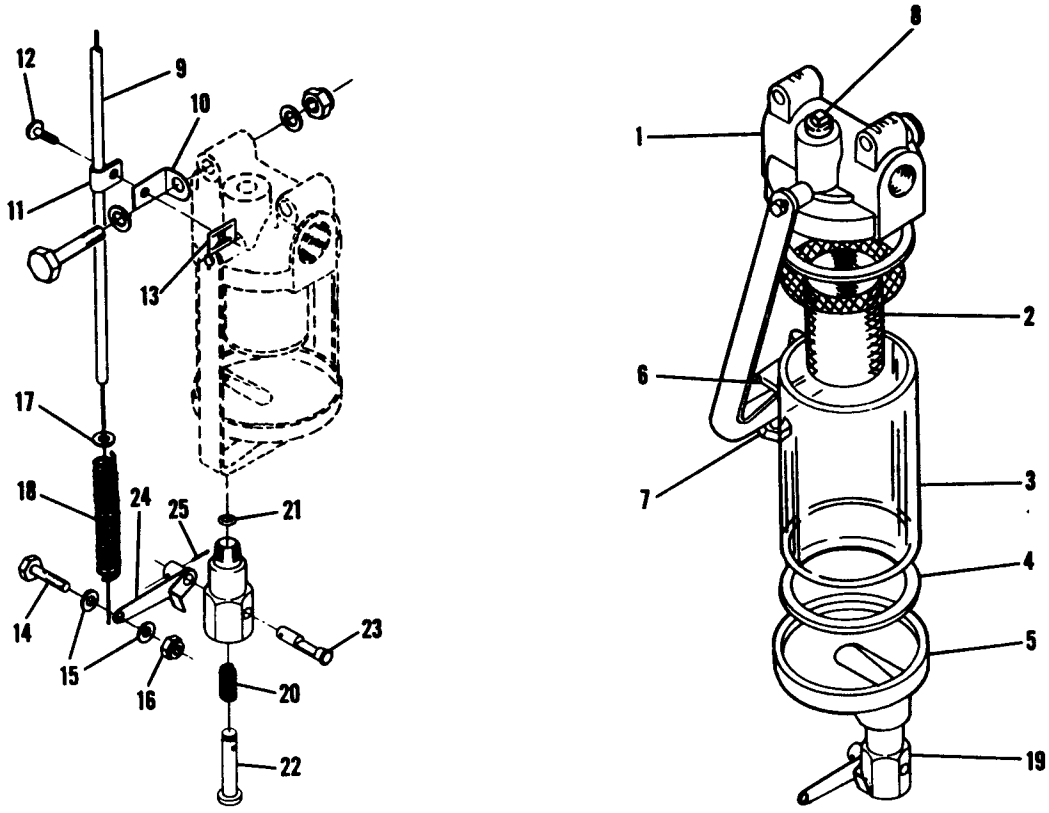

SERIAL 185-0001 THRU 185-0843

Figure 109. Fuel Strainer Assembly & Drain Installation.

FIGURE AND INDEX NO.	PART NUMBER	DESCRIPTION 1 2 3 4 5 6 7	UNITS PER ASSY	USABLE ON CODE
109 -		FUEL STRAINER ASSEMBLY & DRAIN INSTALLATION	NP	A
	0511199-45	STRAINER ASSEMBLY	1	
- 1	33-199-901	BODY ASSEMBLY-FUEL STRAINER GARW	1	
- 2	33-199-71	SCREEN ASSEMBLY GARW	1	
- 3	33-199-5	GLASS BOWL GARW	1	
- 4	33-199-6	GASKET GARW	2	
- 5	33-199-1	CAP GARW	1	
- 6	33-199-8	NUT GARW	1	
- 7	33-199-458	SCREW-SET GARW	1	
- 8	MS20913-1D	PLUG	1	
- 9	S1239-4	CONTROL ASSEMBLY-STRAINER DRAIN REF S1239-12	1	
	S1239-13	CONTROL ASSEMBLY-STRAINER DRAIN FLOATPLANE CP	1	
		ATTACHING PARTS		
-10	0756001-3	SUPPORT	1	
-11	AN742D3	CLAMP	1	
-12	S1021Z8-6	SCREW	1	
-13	NAS446-4-3	NUT	1	
-14	0450311	CLAMP	2	
-15	AN960-10	WASHER	1	
-16	MS21044N3	NUT		
		---*---		
-17	AN960-2	WASHER	1	
-18	0756002	SPRING	1	
-19	0511199-41	VALVE-DRAIN	1	
-20	0851583-3	SPRING	1	
-21	MS29513-7	O RING	1	
-22	0851583-2	PLUNGER	1	
-23	0851592-1	SHAFT	1	
-24	0756001-8	LEVER	1	
-25	MS24665-281	PIN-COTTER		
		A---SERIAL 185-0001 THRU 185-0843		

Fuel System (Cont)

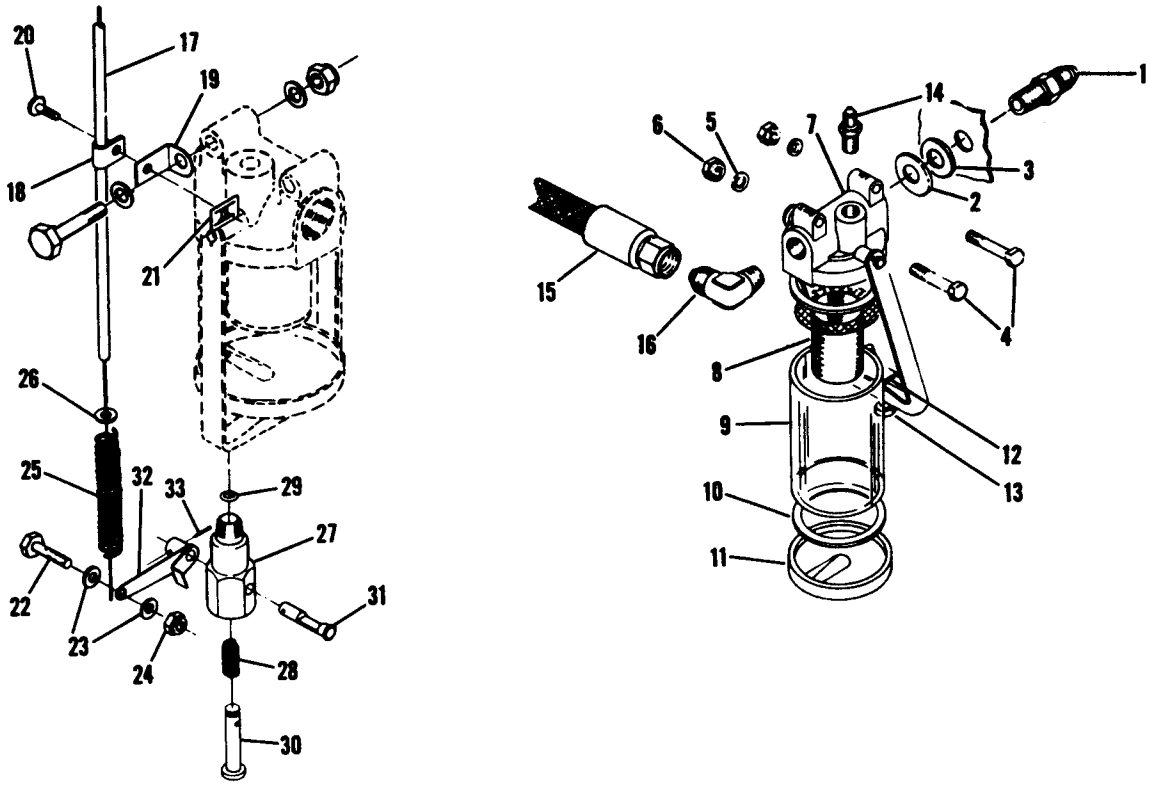

SERIAL 18051184 THRU 18051496

Figure 110. Fuel Strainer & Drain Installation

FIGURE AND INDEX NO.	PART NUMBER	DESCRIPTION 1 2 3 4 5 6 7	UNITS PER ASSY	USABLE ON CODE
110 -		FUEL STRAINER ASSEMBLY & DRAIN INSTALLATION	NP	A
- 1	AN816-8D	NIPPLE	1	
- 2	0750032-1	SHIELD	2	
- 3	S354-3	GROMMET	1	
	0511199-22	STRAINER ASSEMBLY-FUEL GARWIN 33-199	1	
		ATTACHING PARTS		
- 4	AN4-13A	BOLT	2	
- 5	AN960-416L	WASHER	2	
- 6	NAS679A4	NUT	2	
		---*---		
- 7	33-199-902	BODY ASSEMBLY-FUEL STRAINER	1	
- 8	33-199-4	SCREEN ASSEMBLY GARW	1	
- 9	33-199-5	BOWL-GLASS GARW	1	
-10	33-199-6	GASKET GARW	2	
-11	33-199-1	CAP GARW	1	
-12	33-199-8	NUT GARW	1	
-13	33-199-45B	SCREW-SET GARW	1	
-14	AN816-2D	NIPPLE	1	
-15	S1167-8-0120	HOSE	1	
-16	MS20822-2D	ELBOW	1	
-17	S1239-4	CONTROL-STRAINER DRAIN VALVE REF S1239-12	1	
	S1239-24	CONTROL ASSEMBLY-STRAINER DRAIN FLOATPLANE CP	1	
		ATTACHING PARTS		
-18	AN742D3	CLAMP	1	
-19	0756001-3	ANGLE	1	
-20	S1021Z8-8	SCREW	1	
-21	NAS446-4-3	NUT	1	
	AN742D3	CLAMP	1	
	NAS446-4-3	NUT	1	
		---*---		
-22	0450311	CLAMP	3	
-23	AN960-10	WASHER	3	
-24	MS21044N3	NUT	1	
-25	0756002	SPRING	2	
-26	AN960-2	WASHER	1	
-27	0511199-41	DRAIN VALVE ASSEMBLY	1	
-28	0851583-3	SPRING	1	
-29	MS29513-7	O RING	1	
-30	0851583-2	PLUNGER	1	
-31	0851592-1	SHAFT	1	
-32	0756001-8	LEVER	1	
-33	MS24665-281	PIN-COTTER	1	
		A---SERIAL 18051184 THRU 18051496		

Fuel System (Cont)

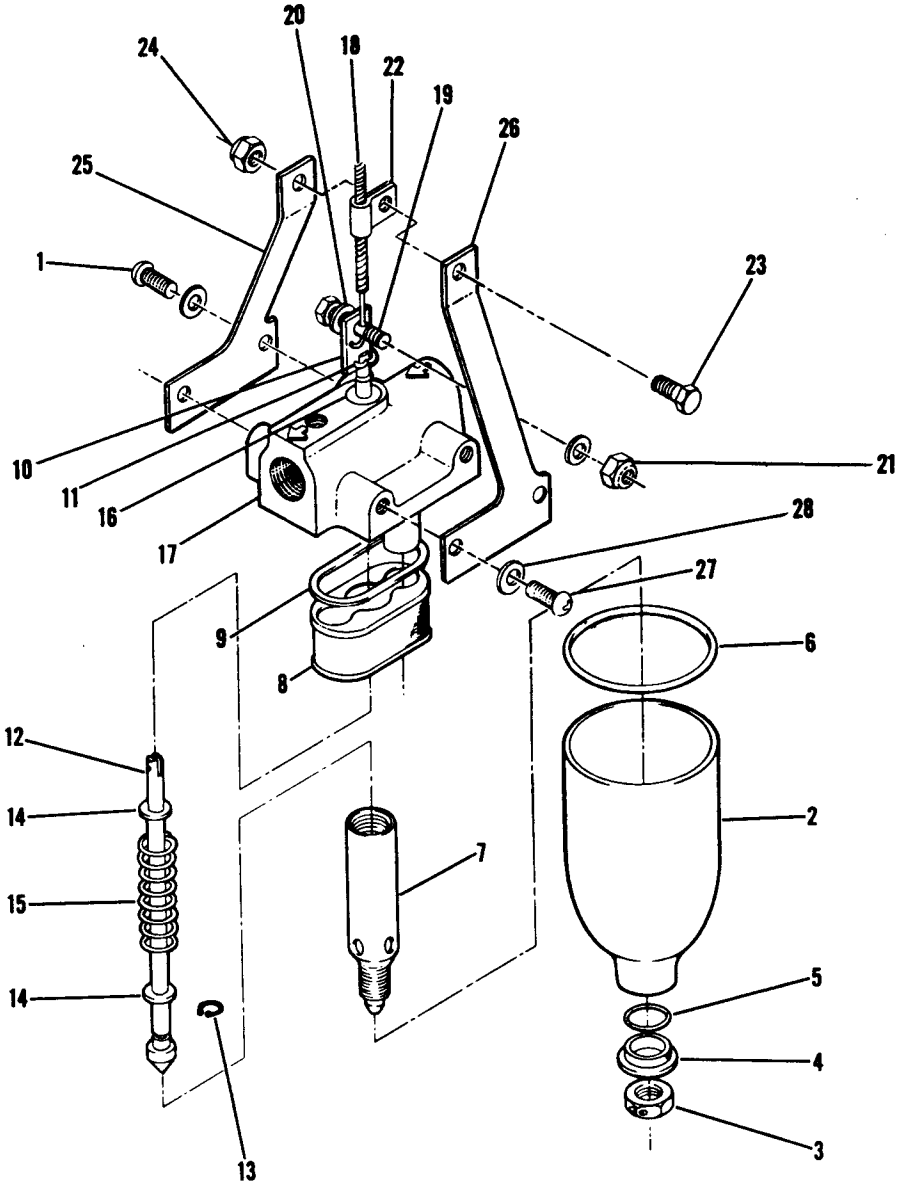

SERIAL 185-0844 THRU 18502310
SERIAL 18051497 THRU 18052384

Figure 110A. Fuel Strainer & Drain Control Installation

FIGURE AND INDEX NO.	PART NUMBER	DESCRIPTION 1 2 3 4 5 6 7	UNITS PER ASSY	USABLE ON CODE
110A-		FUEL STRAINER & DRAIN CONTROL INSTALLATION	NP	A
	0756005-1	STRAINER ASSEMBLY-FUEL	1	B
	0756005-3	STRAINER ASSEMBLY-FUEL	1	C
		ATTACHING PARTS		
- 1	MS20074-03-3	BOLT	2	
	AN936A10	WASHER	2	
		---*---		
- 2	0756008-1	BOWL-FUEL STRAINER	1	
		ATTACHING PARTS		
- 3	S1573-3	NUT	1	
- 4	0756015-1	WASHER	1	
- 5	MS29513-111	O RING	1	
- 6	MS29513-138	O RING	1	
		---*---		
- 7	0756011-1	STANDPIPE	1	
- 8	0756009-1	FILTER ASSEMBLY-FUEL STRAINER	1	B
	0756009-7	FILTER ASSEMBLY-FUEL STRAINER	1	C
- 9	0756009-5	GASKET	1	
-10	0756014-1	PLATE	1	
		ATTACHING PARTS		
-11	MS24665-132	COTTER PIN	1	
		---*---		
-12	0756010-1	PLUNGER ASSEMBLY-DRAIN	1	
-13	MS16624-1025	SNAP RING	2	
-14	0756014-2	WASHER	1	
-15	0756012-1	SPRING	1	
-16	MS29513-10	O RING	1	
-17	0756005-2	TOP ASSEMBLY-FUEL STRAINER	1	D
-18	SEE FIG 68A	CONTROL ASSEMBLY-STRAINER DRAIN SEE FIG 68A	1	E
	SEE FIG 74 & 75	CONTROL ASSEMBLY-STRAINER DRAIN		
		ATTACHING PARTS		
-19	0450311-3	CLAMP	1	
-20	AN960-416	WASHER	1	
-21	NAS679A4	NUT	1	
-22	AN742D3	CLAMP	1	
-23	AN515-10R10	SCREW	1	
-24	MS21044N3	NUT	1	
		---*---		
-25	0500315-2	BRACKET-CONTROL WIRE STABILIZER	1	
-26	0500315-1	BRACKET-CONTROL WIRE STABILIZER	1	
		ATTACHING PARTS		
-27	MS20074-03-3	BOLT	2	
-28	AN936A10	WASHER	2	
		---*---		
		A---SERIAL 185-0844 THRU 18502310		
		SERIAL 18051497 THRU 18052384		
		B---SERIAL 18051497 THRU 18052384		
		C---SERIAL 185-0844 THRU 18502310		
		D---SERIAL 185-0844 THRU 185-1300		
		SERIAL 18051497 THRU 18051875		
		E---SERIAL 185-1301 THRU 18502310		
		SERIAL 18051876 THRU 18052384		

Fuel System (Cont)

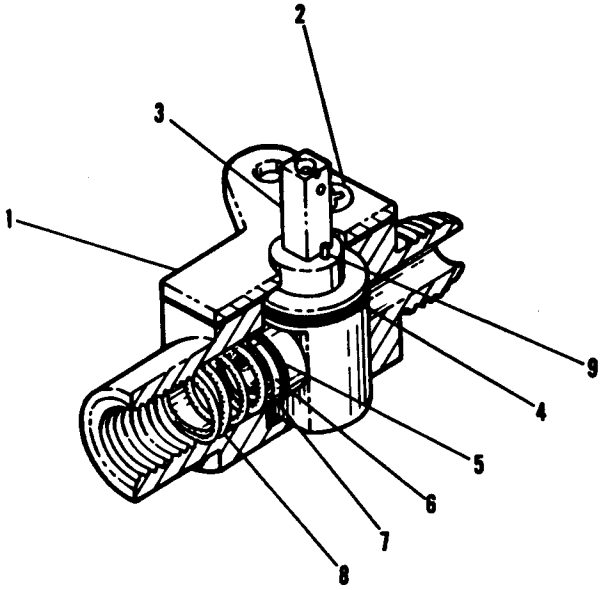

SERIAL 185-0001 THRU 185-0413

Figure 111. Fuel Valve Assembly

FIGURE AND INDEX NO.	PART NUMBER	DESCRIPTION 1 2 3 4 5 6 7	UNITS PER ASSY	USABLE ON CODE
111 -	0716109-1	VALVE ASSEMBLY-FUEL	1	A
- 1	HE1367	COVER HEAC	1	
		ATTACHING PARTS		
- 2	AN507-832-6R	SCREW	2	
		---*---		
- 3	HE1366-1	ROTOR HEAC	1	
- 4	MS29513-16	O RING	1	
- 5	HE1372-1	SEAL HEAC	1	
- 6	MS29513-13	O RING	1	
- 7	HE1373	WASHER HEAC	1	
- 8	HE1251	SPRING HEAC	1	
- 9	79-022-094-0375	PIN-ROLL EN	1	
		A---SERIAL 185-0001 THRU 185-0413		

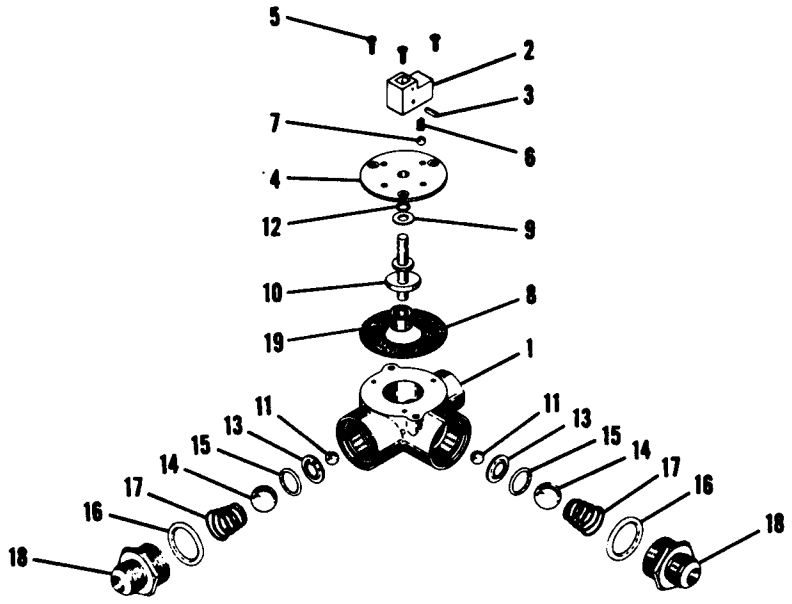

SERIAL 18051184 THRU 18052384

Figure 112. Fuel Selector Valve Assembly

FIGURE AND INDEX NO.	PART NUMBER	DESCRIPTION 1 2 3 4 5 6 7	UNITS PER ASSY	USABLE ON CODE
112 -	0311070-1	VALVE ASSEMBLY-FUEL SELECTOR	1	A
- 1	0311071	BASE-FUEL VALVE	1	
- 2	0513124-1	HOUSING	1	
		ATTACHING PARTS		
- 3	NAS5611P4-8	ROLLPIN EN	1	
		---*---		
- 4	0311073	PLATE-FUEL VALVE	3	
		ATTACHING PARTS		
- 5	AN507-632R5	SCREW	1	
		---*---		
- 6	0311070-2	SPRING-HANDLE LOCK	1	
- 7	S272-207	BALL-HANDLE LOCK	1	
- 8	0311076	GASKET-VALVE PLATE	1	
- 9	AN960C416L	WASHER	1	
-10	0311072	CAM-FUEL VALVE	2	
-11	S272-211	BALL-FUEL VALVE	1	
-12	MS29513-10	O RING	2	
-13	0311077	RETAINER-O RING	2	
-14	S272-220	BALL-FUEL VALVE	2	
-15	MS29513-112	O RING	2	
-16	MS29513-116	O RING	2	
-17	0311079	SPRING-FUEL VALVE	2	
-18	0311075-1	RETAINER-FUEL VALVE	1	
-19	S1003-9A	BEARING		
		A---SERIAL 18051184 THRU 18052384		

Oil System

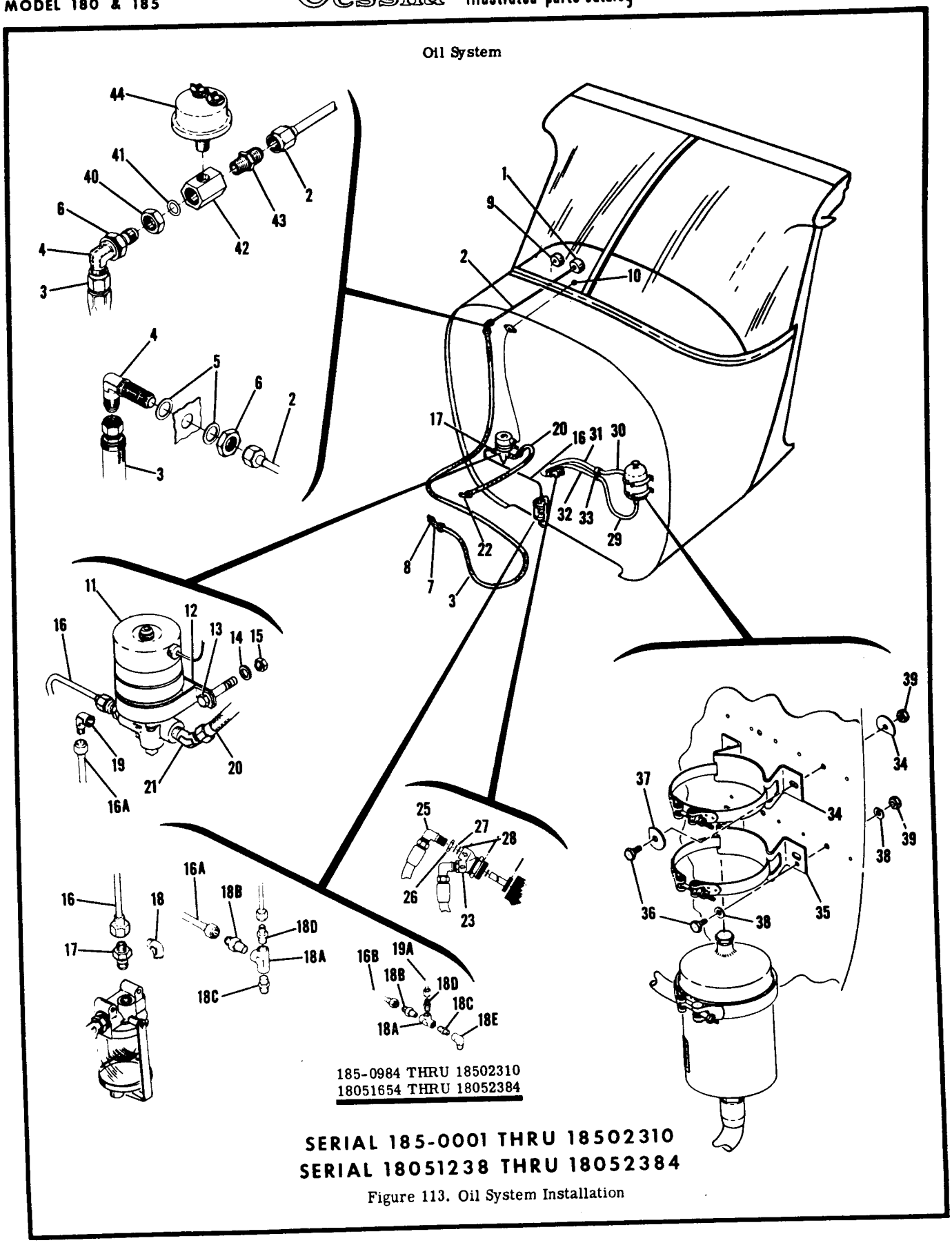

185-0984 THRU 18502310
18051654 THRU 18052384

SERIAL 185-0001 THRU 18502310
SERIAL 18051238 THRU 18052384

Figure 113. Oil System Installation

FIGURE AND INDEX NO.	PART NUMBER		DESCRIPTION 1 2 3 4 5 6 7	UNITS PER ASSY	USABLE ON CODE
113 -			OIL SYSTEM INSTALLATION	NP	C
- 1	0513144-10		GAGE-OIL PRESSURE	1	H
	G444619		GAGE-OIL PRESSURE SW	1	N
	G444627		GAGE-OIL PRESSURE SW	1	P
- 2	0500106-292		LINE ASSEMBLY-OIL PRESSURE FIREWALL TO PANEL	1	
- 3	S1236-4-0440		HOSE ASSEMBLY-OIL PRESSURE FIREWALL TO ENGINE	1	G
	S1167-4-0388		HOSE ASSEMBLY-OIL PRESSURE FIREWALL TO ENGINE	1	F
			ATTACHING PARTS		
- 4	AN833-4D		ELBOW	1	
- 5	AN960D716		WASHER	2	
- 6	AN924-4D		NUT	1	
- 7	0752037-1		ELBOW	1	
- 8	AN912-3		BUSHING	1	
			---*---		
- 9	0513144-2		GAGE-OIL TEMPERATURE	1	H
	G442697		GAGE-OIL TEMPERATURE SW	1	J
	G442698		GAGE-OIL TEMPERATURE SW 300 HP ONLY	1	K
	G442785		GAGE-OIL TEMPERATURE SW	1	Q
	G442786		GAGE-OIL TEMPERATURE SW	1	R
			OIL DILUTION INSTALLATION	NP	
	0713222-1		PLACARD	1	H
-10	0511063		SWITCH	1	T
	S2160-3		SWITCH	1	U
			ATTACHING PARTS		
	0511063-2		NUT	1	T
			---*---		
	PSM15N		CIRCUIT BREAKER SPT	1	
-11	AN4078-1		VALVE-SOLENOID	1	
			ATTACHING PARTS		
-12	AN742D32		CLAMP	2	
-13	AN3-4A		BOLT	2	
-14	AN960-10L		WASHER	2	
-15	MS21044N3		NUT	2	
			---*---		
-16	0500106-347		LINE ASSEMBLY VALVE TO STRAINER	1	A
-16A	0700087-20		LINE ASSEMBLY VALVE TO STRAINER	1	B
	0700147-1	*	LINE ASSEMBLY-VALVE TO STRAINER	1	L
-16B	0700147-18	*	LINE ASSEMBLY-VALVE TO STRAINER	1	M
			ATTACHING PARTS		
-17	AN816-4D		NIPPLE	2	A
-18	MS20823-4D		ELBOW WHEN PRIMER IS NOT USED	1	B
-18A	AN917-1D	*	TEE	1	
-18B	AN816-4D	*	NIPPLE	1	
-18C	AN911-1D	*	NIPPLE	1	
-18D	AN816-2D	*	NIPPLE	1	
-18E	AN914-1D	*	ELBOW	1	M
-19	MS20822-4D		ELBOW	1	B
			---*---		
-19A	0700147-45	*	LINE ASSEMBLY-PRIMER	1	M
-20	S1236-4-0194		HOSE ASSEMBLY VALVE TO ENGINE	1	V
	S1236C4-0290		HOSE ASSEMBLY VALVE TO ENGINE	1	W
			ATTACHING PARTS		
-21	MS20823-4D		ELBOW	1	V
	AN816-4D		NIPPLE	1	W
	MS21919DG12		CLAMP ATTACH HOSE TO FIREWALL	1	W
-22	MS20823-4B		ELBOW	1	
			---*---		
			FULL FLOW OIL FILTER INSTALLATION	NP	D
-23	0750153-8		ADAPTER KIT	1	
-24			DELETED, NOT AVAILABLE		
-25	AN833-10D		ELBOW	2	
-26	AN6289D10		NUT	2	
-27	MS28778B10		GASKET	2	
-28	MS28777-10		O RING	2	
-29	0750177-6		HOSE	1	
-30	0750177-5		HOSE	1	
-31	0500106-348		TUBE ASSEMBLY	1	
-32	0500106-349		TUBE ASSEMBLY	1	
			ATTACHING PARTS		
-33	AN815-10D		UNION	1	
			---*---		
	0750153-10		FILTER & BRACKET ASSEMBLY	1	
	1A0235		ELEMENT-REPLACEMENT WNL	1	
	1A0218		SEAL RING-COVER WNL	1	

CONTINUED ON NEXT PAGE

FIGURE AND INDEX NO.	PART NUMBER	DESCRIPTION 1 2 3 4 5 6 7	UNITS PER ASSY	USABLE ON CODE
113 -34	1A0233	BRACKET-UPPER WNL	1	
-35	0750153-3	BRACKET-LOWER	1	
		ATTACHING PARTS		
	AN4-5A	BOLT	2	
-37	AN960-4	WASHER	4	
-38	AN960-416	WASHER	4	
-39	NAS679A4	NUT	2	
		---*---		
	SEE FIG 113A #	OIL FILTER INSTALLATION	NP	E
-40	AN924-4D	NUT USED WITH HOURMETER	1	S
-41	MS28773-4	O RING USED WITH HOURMETER	1	S
-42	1213158-1	ADAPTOR USED WITH HOURMETER	1	S
-43	AN816-4	NIPPLE USED WITH HOURMETER	1	S
-44	S1711-1	SWITCH USED WITH HOURMETER	1	S

NOTE. *THESE PARTS REPLACE MS20823-4D ELBOW & 0700147-47 PRIMER LINE WHEN OIL DILUTION IS USED IN CONJUCTION WITH MANUAL PRIMER.

NOTE. #FOR FRAM OIL FILTER INSTALLATION 180 SERIAL 18051238 THRU 18051256 SEE FIGURE 114, ITEMS 23 THRU 39.

A---SERIAL 185-0001 THRU 185-0179
B---SERIAL 185-0180 THRU 18502310
SERIAL 18051238 THRU 18052384
C---SERIAL 185-0001 THRU 18502310
SERIAL 18051238 THRU 18052384
D---SERIAL 185-0001 THRU 185-0605
E---SERIAL 185-0606 THRU 18502310
SERIAL 18051257 THRU 18052384
F---SERIAL 18051238 THRU 18052384
G---SERIAL 185-0001 THRU 18502310
H---SERIAL 185-0001 THRU 185-0776
SERIAL 18051238 THRU 18051445
J---SERIAL 185-0777 THRU 185-1149 260 HP ONLY
SERIAL 18051446 THRU 18051875
K---SERIAL 185-0968 THRU 185-1300 300 HP ONLY
L---SERIAL 185-0180 THRU 185-0983
SERIAL 18051238 THRU 18051653
M---SERIAL 185-0984 THRU 18502310
SERIAL 18051654 THRU 18052384
N---SERIAL 185-0777 THRU 185-1300
SERIAL 18051446 THRU 18051875
P---SERIAL 185-1301 THRU 18502310
SERIAL 18051876 THRU 18052384
Q---SERIAL 18051876 THRU 18052384
R---SERIAL 185-1301 THRU 18502310
S---SERIAL 185-1272 THRU 18502310
SERIAL 18051866 THRU 18052384
T---SERIAL 185-0001 THRU 18502090
SERIAL 18051238 THRU 18052284
U---SERIAL 18502091 THRU 18502310
SERIAL 18052285 THRU 18052384
V---SERIAL 185-0001 THRU 18502007, 18502026, 18502027
SERIAL 18051238 THRU 18052248
W---SERIAL 18502008 THRU 18502025,
18502028 THRU 18502310
SERIAL 18052249 THRU 18052384

Oil System (Cont)

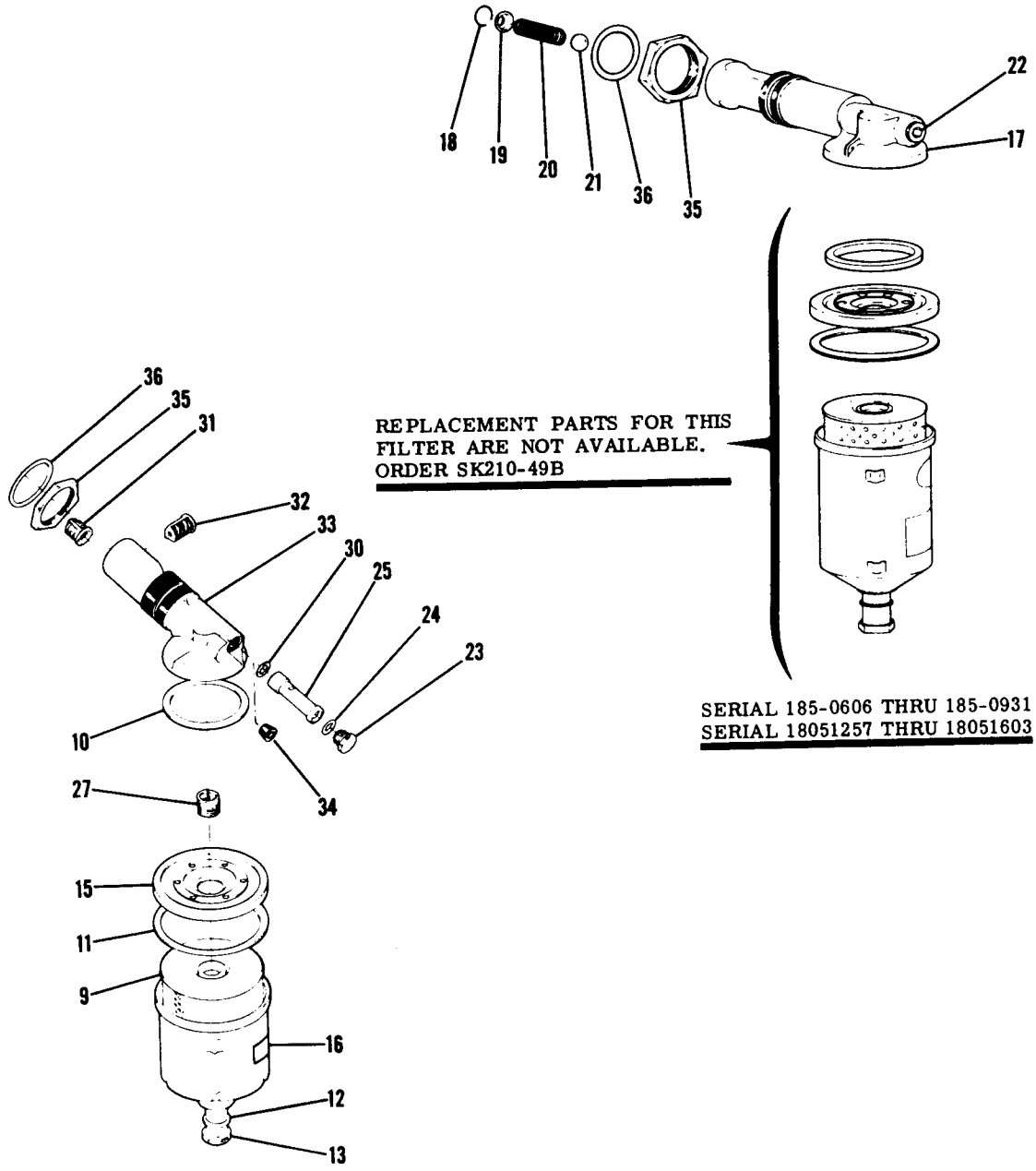

SERIAL 185-0606 THRU 18502310
SERIAL 18051257 THRU 18052384

Figure 113A. Oil Filter Installation

FIGURE AND INDEX NO.	PART NUMBER	DESCRIPTION 1 2 3 4 5 6 7	UNITS PER ASSY	USABLE ON CODE
		OIL FILTER INSTALLATION	NP	A
113A-		OIL FILTER ASSEMBLY ORDER SK210-49B	1	B
- 1		DELETED, NOT AVAILABLE		
- 2		DELETED, NOT AVAILABLE		
- 3		DELETED, NOT AVAILABLE		
- 4		DELETED, NOT AVAILABLE		
- 5		DELETED, NOT AVAILABLE		
- 6		DELETED, NOT AVAILABLE		
- 7		DELETED, NOT AVAILABLE		
- 8		DELETED, NOT AVAILABLE		
	C294505-0101	OIL FILTER ASSEMBLY	1	C
- 9	C294505-0102 *	FILTER ELEMENT KIT	1	C
-10	6436635	GASKET AC	1	C
-11	6436637	GASKET AC	1	C
-12	5579654	WASHER AC	1	C
-13	6436916 *	STUD-CENTER AC	1	C
-14		DELETED, NOT AVAILABLE		
-15	6436989 *	LID-OIL FILTER AC	1	C
-16	1250410-3 *	PLACARD-OIL FILTER	1	C
-17		ADAPTER ASSEMBLY-OIL FILTER ORDER AK185-40	1	D
-18	1250407-1	SNAP RING	1	D
-19	1250408-1	CAP RETAINER	1	D
-20	1250409-1	SPRING	1	D
-21	S272-17	BALL	1	D
-22	AN932C4	PLUG-PIPE	1	D
	0756024-1	ADAPTER ASSEMBLY-OIL FILTER WHEN EXHAUSTED	1	E
		USE 1250922-2		
	1250922-2	ADAPTER ASSEMBLY-OIL FILTER	1	F
-23	074415-2	PLUG	1	E
-24	AN6227-11	O RING	1	E
-25	0756019-1	SLEEVE	1	E
-26		DELETED BY SERVICE LETTER 66-61		
-27	MS124663	INSERT	1	G
-28		DELETED BY SERVICE LETTER 66-61		
-29		DELETED BY SERVICE LETTER 66-61		
-30	MS20002C6	WASHER	1	E
-31	0756022-2	VALVE-OUTLET	1	E
-32	0756022-1	VALVE-BY PASS	1	G
-33	0756023-1	ADAPTER WHEN EXHAUSTED USE 1250922-2	1	E
	1250921-2	ADAPTER	1	F
-34	AN932C4	PLUG-PIPE	1	F
-35	1250405-1	NUT-ADAPTER	1	
-36	AN123883	PACKING-ADAPTER NUT	1	
	SE709	WRENCH-OIL FILTER ADAPTER	1	

NOTE. *THESE ARE ALSO REPLACEMENT PARTS FOR SK210-49B.

A---SERIAL 185-0606 THRU 18502310
SERIAL 18051257 THRU 18052384
B---SERIAL 185-0606 THRU 185-0931
SERIAL 18051257 THRU 18051603
C---SERIAL 185-0932 THRU 18502310
SERIAL 18051604 THRU 18052384
D---SERIAL 185-0606 THRU 185-0949
SERIAL 18051257 THRU 18051607
E---SERIAL 185-0950 THRU 185-1231
SERIAL 18051608 THRU 18051835
F---SERIAL 185-1232 THRU 18502310
SERIAL 18051836 THRU 18052384
G---SERIAL 185-0950 THRU 18502310
SERIAL 18051608 THRU 18052384

Oil System

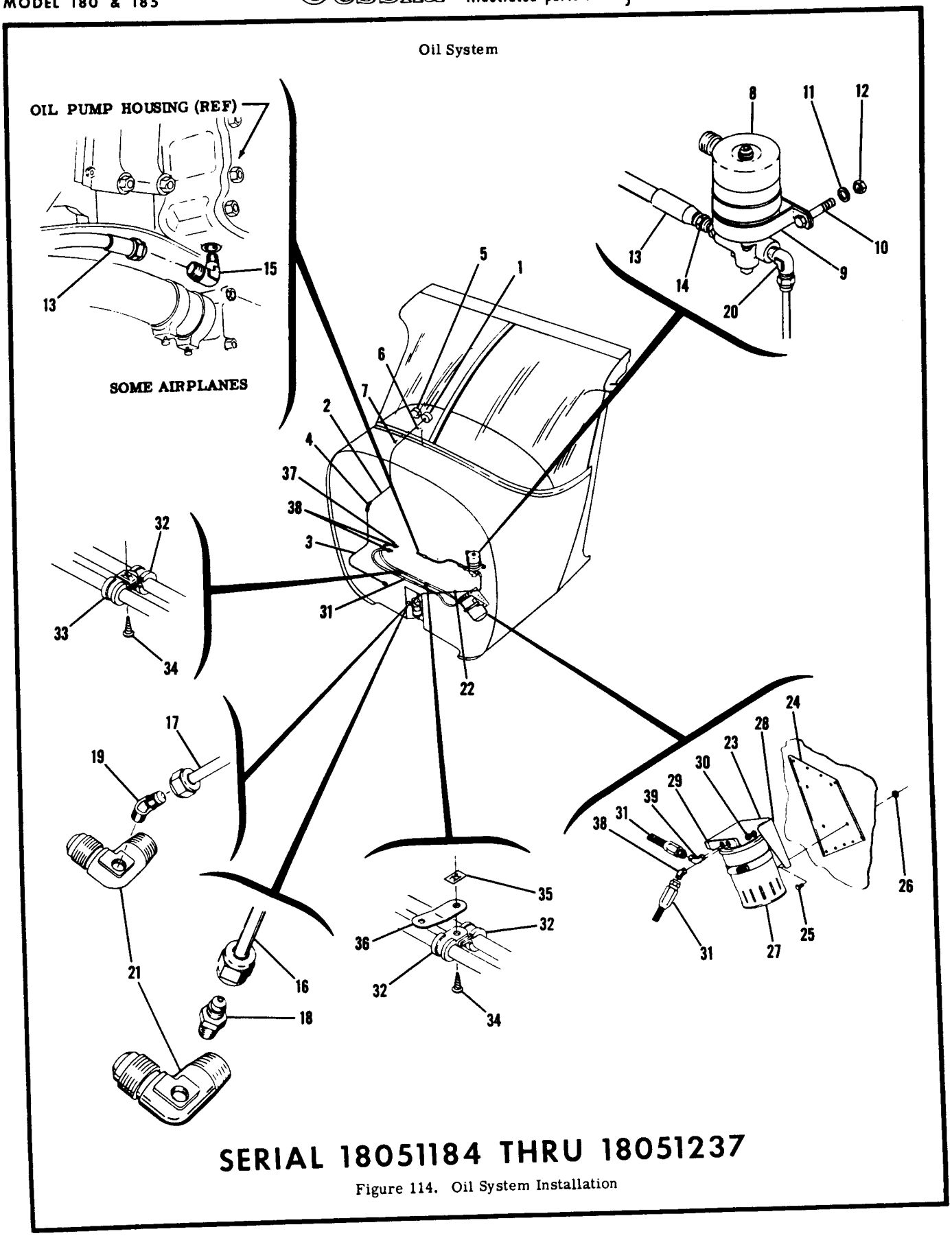

SERIAL 18051184 THRU 18051237

Figure 114. Oil System Installation

FIGURE AND INDEX NO.	PART NUMBER	DESCRIPTION 1 2 3 4 5 6 7	UNITS PER ASSY	USABLE ON CODE
114 -		OIL SYSTEM INSTALLATION	NP	A
- 1	0513144-10	GAGE-OIL PRESSURE	1	
- 2	0500106-292	LINE-OIL PRESSURE GAGE TO FIREWALL	1	
- 3	S1167-4-0388	LINE-OIL PRESSURE FIREWALL TO ENGINE	1	
		ATTACHING PARTS		
- 4	AN837-4D	ELBOW	1	
	AN9600716	WASHER	1	
	AN924-4D	NUT	1	
		---*---		
- 5	0513144-2	GAGE-OIL TEMPERATURE	1	
		OIL DILUTION INSTALLATION	NP	
- 6	0511063	SWITCH-OIL DILUTION	1	
		ATTACHING PARTS		
	0511063-2	NUT	1	
		---*---		
- 7	PSM15N	CIRCUIT BREAKER	1	
- 8	AN4078-1	VALVE-SOLENOID	1	
		ATTACHING PARTS		
- 9	AN742D32	CLAMP	2	
-10	AN3-5A	BOLT	2	
-11	AN960-10L	WASHER	2	
-12	MS21044N3	NUT	2	
		---*---		
-13	S1168-4-11	HOSE ASSEMBLY VALVE TO ENGINE OIL PUMP	1	
		WHEN EXHAUSTED USE S1495-4 & S1497-4		
	S1495-4	HOSE-11.00 IN LG BULK ITEM REF S1499-4JJ-11	1	
	S1497-4	FITTING-SOCKETLESS USED WITH S1495-4 HOSE	2	
-14	AN816-4D	UNION	1	
-15	MS20823-4B	ELBOW	1	
-16	0500106-144	FUEL LINE VALVE TO STRAINER	1	
-17	0500106-220 *	FUEL LINE VALVE TO STRAINER	1	
-18	AN816-4D	NIPPLE	1	
-19	MS20823-4D	ELBOW	1	
-20	MS20822-4D	ELBOW	1	
-21	0750035-1	ELBOW	1	
-22	AN742D4	CLAMP	1	
	S1021Z8-6	SCREW	1	
	NAS446-4-3	NUT	1	
		---*---		
		INSTALLATION-OIL FILTER	NP	
-23	0750147-5	BRACKET & FILTER ASSEMBLY	1	
		ATTACHING PARTS		
-24	0750028-2	DOUBLER	1	
-25	AN4-3A	BOLT	4	
-26	NAS679A4	NUT	4	
		---*---		
-27	PB55	FILTER ASSEMBLY FCD	1	
-28	X109488	BRACKET FCD	1	
-29	109450	ADAPTER FCD	1	
		ATTACHING PARTS		
-30	109532	SCREW FCD	4	
	109531	WASHER FCD	4	
		---*---		
-31	S1167-4-0300	HOSE ASSEMBLY-OIL FILTER	2	
		ATTACHING PARTS		
-32	MS21919DG8	CLAMP	3	
-33	S1486DG8L	CLAMP	1	
-34	S1021Z8-10	SCREW	2	
-35	NAS446-4-3	NUT	1	
-36	0550100-6	CLIP-MOUNTING	1	
		---*---		
-37	0750147-3	BUSHING	1	
	AN900-10	WASHER	1	
-38	MS20823-4D	ELBOW	3	
-39	MS20822-4D	ELBOW	1	
		A---SERIAL 18051184 THRU 18051237		

Oil Filter

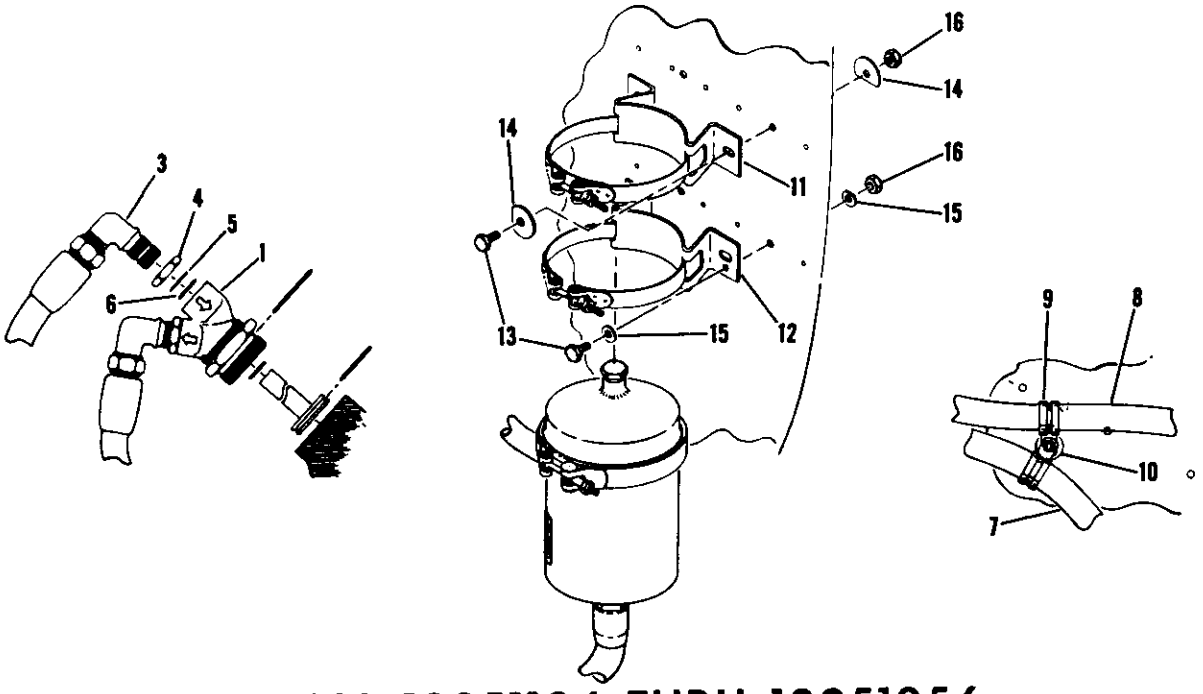

SERIAL 18051184 THRU 18051256

Figure 115. Full Flow Oil Filter Installation

FIGURE AND INDEX NO.	PART NUMBER	DESCRIPTION 1 2 3 4 5 6 7	UNITS PER ASSY	USABLE ON CODE
115 -		FULL FLOW OIL FILTER INSTALLATION	NP	A
- 1	0750153-8	ADAPTER KIT	1	
- 2		DELETED, NOT AVAILABLE		
- 3	AN833-10D	ELBOW	2	
- 4	AN6289D10	NUT	2	
- 5	MS28778-10	GASKET	2	
- 6	MS28777-10	O RING	2	
- 7	S1167-10-0404	HOSE	1	
- 8	S1167-10-0404	HOSE	1	
		ATTACHING PARTS		
- 9	MS21919DG15	CLAMP	2	
-10	NAS43DD3-56	SPACER	1	
	AN520-10R22	SCREW	1	
	MS21044N3	NUT	1	
	AN970-3	WASHER	2	
		---+---		
	0750153-10	FILTER & BRACKET ASSEMBLY	1	
	1A0235	ELEMENT-REPLACEMENT WNL	1	
	1A0218	SEAL RING-COVER WNL	1	
-11	1A0233	BRACKET-UPPER WNL	1	
-12	0750153-3	BRACKET-LOWER	1	
		ATTACHING PARTS		
-13	AN4-5A	BOLT	4	
-14	AN960-4	WASHER	4	
-15	AN960-416	WASHER	4	
-16	NAS679A4	NUT	2	
		---+---		
		A---SERIAL 18051184 THRU 18051256		

FIGURE AND INDEX NO.	PART NUMBER	DESCRIPTION 1 2 3 4 5 6 7	UNITS PER ASSY	USABLE ON CODE
116 -		VACUUM SYSTEM INSTALLATION-ENGINE DRIVEN ----------	NP	A
- 1	C431001-0101	PUMP-VACUUM ----------	1	
- 2	0750103-1	SEPARATOR-OIL ----------	1	
		ATTACHING PARTS		
- 3	0750036-1	BRACKET ----------	1	
- 4	AN3-15A	BOLT ----------	2	
	AN960D10L	WASHER ----------	2	
	MS21044N3	NUT ----------	2	
		---*---		
- 5	C482001-0101	VALVE-SUCTION RELIEF ----------	1	
- 6	0311057-1	GAGE-SUCTION WHEN EXHAUSTED USE S1414N1 ----------	1	
	S1414N1	GAGE-SUCTION ----------	1	
		ATTACHING PARTS		
- 7	AN5078632R12	SCREW ----------	4	
		---*---		
- 8	S51-8	HOSE-OIL RETURN 9.00 IN LG BULK ITEM ----------	1	
		REF S-51-8-36		
		ATTACHING PARTS		
- 9	AN844-8	ELBOW ----------	1	
-10	NAS397-14-1	CLAMP ----------	2	
		---*---		
-11	0750037-1	LINE-OIL RETURN ----------	1	
-12	S51-8	HOSE-VENT 2.00 IN.LG. BULK ITEM REF S-51-8-8 ----	1	
		ATTACHING PARTS		
-13	NAS397-14-1	CLAMP ----------	2	
		---*---		

CONTINUED ON NEXT PAGE

Vacuum System

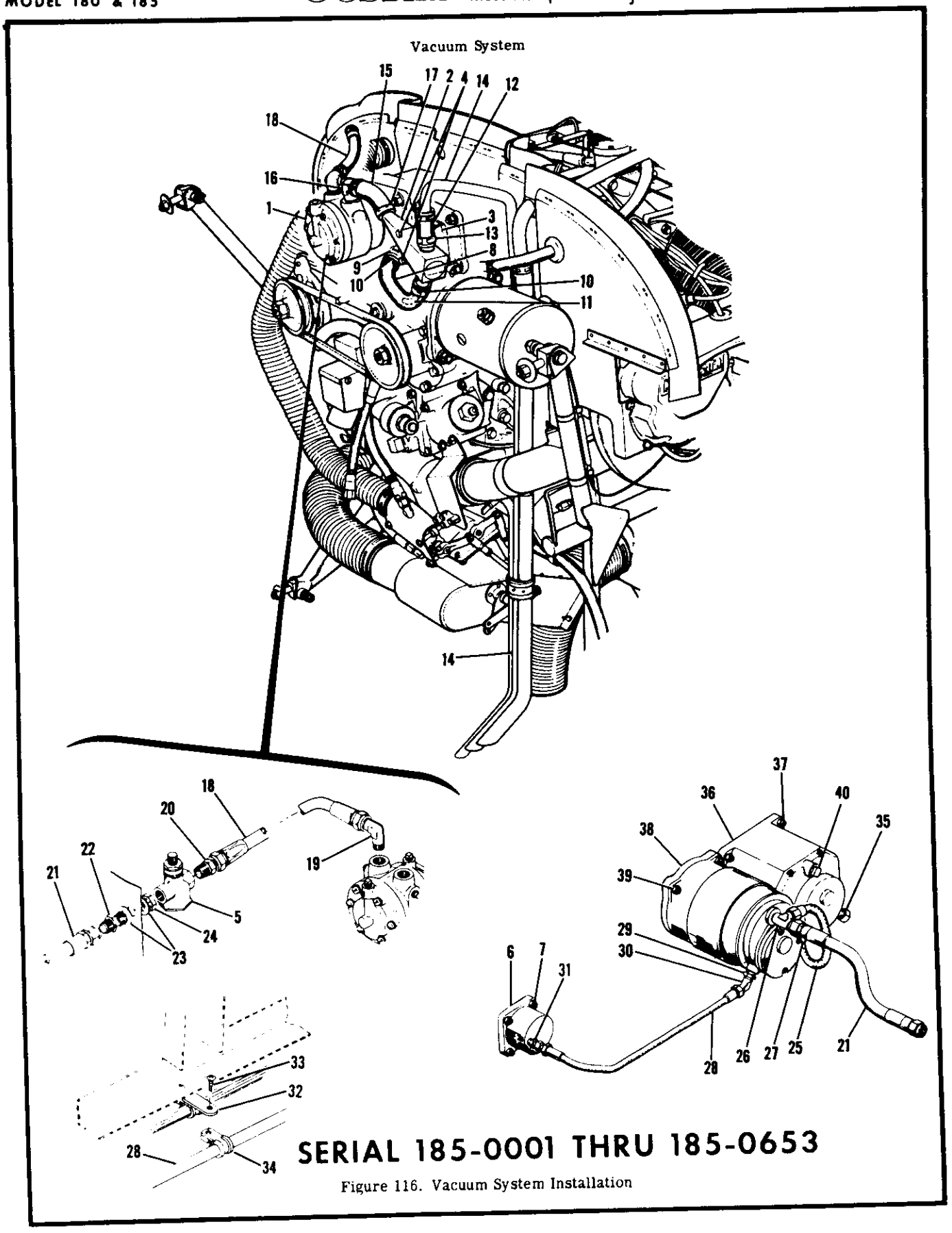

SERIAL 185-0001 THRU 185-0653

Figure 116. Vacuum System Installation

FIGURE AND INDEX NO.	PART NUMBER	DESCRIPTION 1 2 3 4 5 6 7	UNITS PER ASSY	USABLE ON CODE
116 -14	0500106-339	LINE-VENT	1	
-15	S51-8	HOSE-DISCHARGE 3.25 IN LG BULK ITEM REF S-51-8-13	1	
		ATTACHING PARTS		
-16	AN842-8	ELBOW	1	
-17	NAS397-14-1	CLAMP	2	
		---*---		
-18	S1168-6-10 1/2	HOSE-SUCTION WHEN EXHAUSTED USE S1495-6 & 1497-6	1	
	S1495-6 *	HOSE-10.50 IN LG BULK ITEM REF S1499-6-10.50	1	
	S1497-6	FITTING-SOCKETLESS USED WITH 1495-6 HOSE	2	
-19	MS20822-6-6	ELBOW	1	
-20	AN816-6-8D	UNION	1	
-21	S1168-6-12	HOSE-SUCTION FIREWALL TO HORIZONTAL GYRO WHEN EXHAUSTED USE S1495-6 & 1497-6	1	
	S1495-6 *	HOSE-12.00 IN LG BULK ITEM REF S1499-6-12.00	1	
	S1497-6	FITTING-SOCKETLESS USED WITH S1495-6 HOSE	2	
-22	S1988-1	UNION	1	
-23	AN960D916	WASHER	2	
-24	AN924-6D	NUT	1	
-25	0500106-221	LINE-DIRECTIONAL GYRO TO HORIZONTAL GYRO	1	
		ATTACHING PARTS		
-26	MS20826-6D	TEE	1	
-27	MS20822-6D	ELBOW	1	
		---*---		
-28	S1168-2-25	HOSE-HORIZONTAL GYRO TO SUCTION GAGE	1	
		ATTACHING PARTS		
-29	AN912-1D	BUSHING-REDUCER	1	
-30	MS20823-2D	ELBOW	1	
-31	AN816-2D	NIPPLE	1	
-32	1260043-2	STRAP	1	
-33	S1021Z8-8	SCREW	1	
-34	S14860G6L	CLAMP	1	
		---*---		
-35	MS20913-2D	PLUG	2	
-36	0311056-5	GYRO-DIRECTIONAL-NEW WHEN EXHAUSTED ORDER AK172-116 KIT	1	
	0311056-4	GYRO-DIRECTIONAL-REBUILT WHEN EXHAUSTED USE S1316N1	1	
	S1316N1	GYRO-DIRECTIONAL WHEN EXHAUSTED USE C661002-0101	1	
	C661002-0101	GYRO-DIRECTIONAL-REMANUFACTURED WHEN EXHAUSTED ORDER AK172-116 KIT	1	
		ATTACHING PARTS		
-37	AN515814	SCREW	4	
		---*---		
-38	0311058-4	GYRO-HORIZON-NEW WHEN EXHAUSTED ORDER AK172-116 KIT	1	
	0311058-5	GYRO-HORIZON-REBUILT WHEN EXHAUSTED USE S1309N1	1	
	S1309N1	GYRO-HORIZON-REBUILT WHEN EXHAUSTED USE C661001-0101	1	
	C661001-0101	GYRO-HORIZON-REMANUFACTURED WHEN EXHAUSTED ORDER AK172-116 KIT	1	
		ATTACHING PARTS		
-39	AN520810R16	SCREW	4	
		---*---		
-40	MS20913-2D	PLUG	1	
		NOTE. *WHEN INITIALLY ORDERING THIS PART ALSO ORDER TWO S1497 SOCKETLESS FITTINGS		
		A---SERIAL 185-0001 THRU 185-0653		

Vacuum System (Cont)

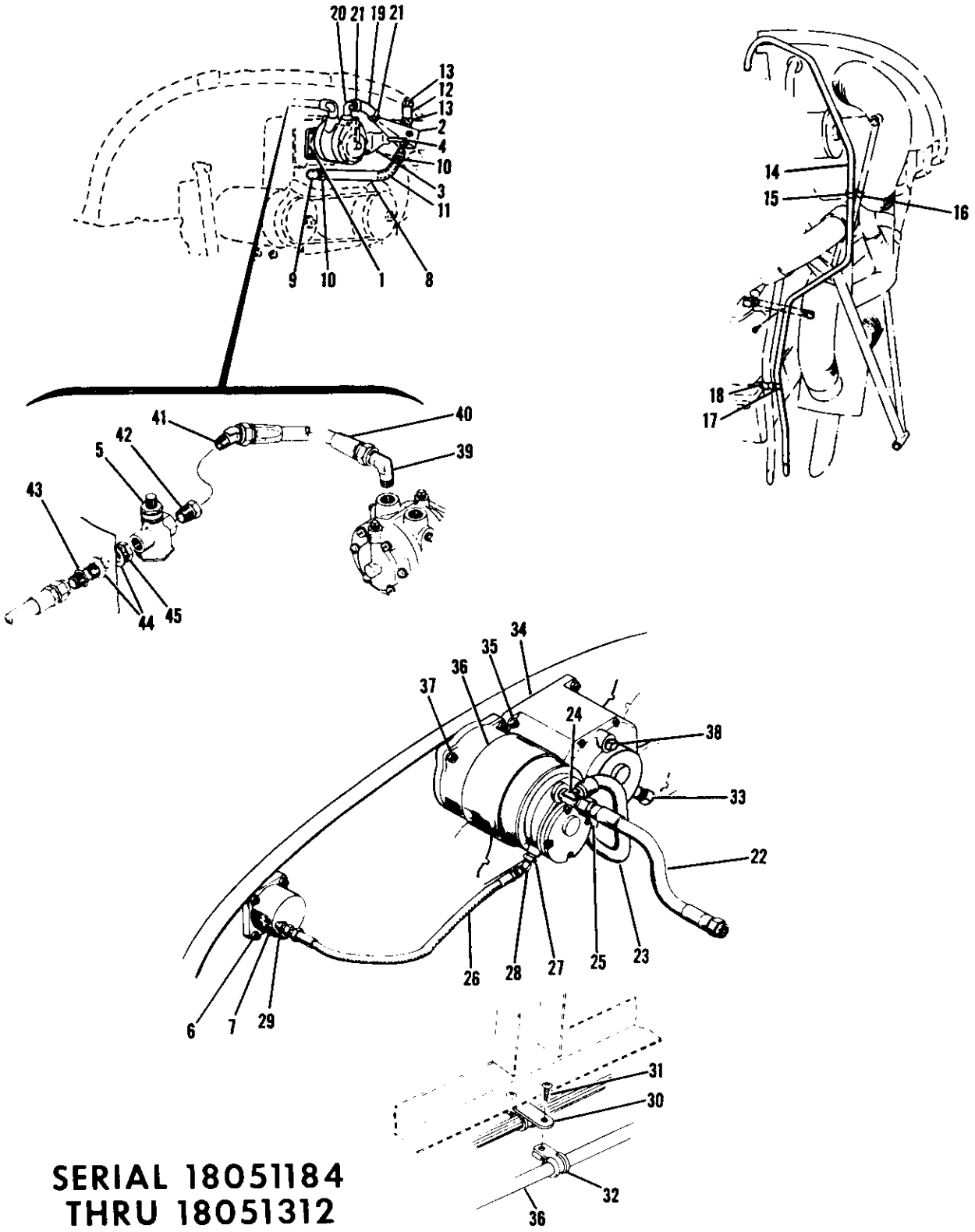

SERIAL 18051184
THRU 18051312

Figure 117. Vacuum System Installation

FIGURE AND INDEX NO.	PART NUMBER	DESCRIPTION 1 2 3 4 5 6 7	UNITS PER ASSY	USABLE ON CODE
117 -		VACUUM SYSTEM INSTALLATION-ENGINE DRIVEN	NP	A
- 1	C431001-0101	PUMP-VACUUM	1	
- 2	0750103-1	SEPARATOR-OIL	1	
		ATTACHING PARTS		
- 3	0750100-11	BRACKET	2	
- 4	AN3-15A	BOLT	2	
	AN960D10L	WASHER	2	
	MS21044N3	NUT		
		---*---	1	
- 5	C482001-0101	VALVE-SUCTION RELIEF	1	
- 6	0311057-1	GAGE-SUCTION WHEN EXHAUSTED USE S1414N1	1	
	S1414N1	GAGE-SUCTION	1	
		ATTACHING PARTS		
- 7	AN5078632R12	SCREW	4	
		---*---		
- 8	S51-8	HOSE-OIL RETURN 9.00 IN. LG. BULK ITEM REF S-51-8-36	1	
		ATTACHING PARTS		
- 9	AN844-8	ELBOW	1	
-10	NAS397-14-1	CLAMP TIN A3122-14-1	2	
		---*---		
-11	0750100-12	LINE-OIL RETURN	1	
-12	S51-8	HOSE-VENT 2.00 IN. LG. BULK ITEM REF S-51-8-8	1	
		ATTACHING PARTS		
-13	NAS397-14-1	CLAMP	2	
		---*---		
-14	0500106-251	LINE-VENT	1	
		ATTACHING PARTS		
-15	AN742D8	CLAMP	1	
-16	0761202-3	LINK	1	
	S1021Z10-10	SCREW	1	
-17	AN742D8	CLAMP	1	
-18	AN742D12	CLAMP	1	
	S1021Z10-8	SCREW		
		---*---		
-19	S51-8	HOSE-DISCHARGE 3.25 IN. LG. BULK ITEM REF S-51-8-13	1	
		ATTACHING PARTS		
-20	AN842-8	ELBOW	1	
-21	NAS397-14-1	CLAMP	2	
		---*---		
-22	S1168-6-12	HOSE-SUCTION FIREWALL TO HORIZONTAL GYRO WHEN EXHAUSTED USE S1495-6 & S1497-6	1	
	S1495-6 *	HOSE-12.00 IN LG BULK ITEM REF S1499-6-12.00	1	
	S1497-6	FITTING-SOCKETLESS USED WITH S1495-6 HOSE	2	
-23	0500106-221	LINE-DIRECTIONAL GYRO TO HORIZONTAL GYRO	1	
		ATTACHING PARTS		
-24	MS20826-6D	TEE	1	
-25	MS20822-6D	ELBOW	1	
		---*---		
-26	S1168-2-15	HOSE-HORIZONTAL GYRO TO SUCTION GAGE	1	
		ATTACHING PARTS		
-27	AN912-1D	BUSHING-REDUCER	1	
-28	MS20823-2D	ELBOW	1	
-29	AN816-2D	NIPPLE	1	
-30	1260043-2	STRAP	1	
-31	S1021Z8-8	SCREW	1	
-32	S1486DG6L	CLAMP		
		---*---	2	
-33	MS20913-2D	PLUG	1	
-34	0311056-5	GYRO-DIRECTIONAL-NEW WHEN EXHAUSTED ORDER AK172-116 KIT	1	
	0311056-4	GYRO-DIRECTIONAL-REBUILT WHEN EXHAUSTED USE S1316N1	1	
	S1316N1	GYRO-DIRECTIONAL-REBUILT WHEN EXHAUSTED USE C661002-0101	1	
	C661002-0101	GYRO-DIRECTIONAL-REMANUFACTURED WHEN EXHAUSTED ORDER AK172-116 KIT	1	
		ATTACHING PARTS		
-35	AN520810R16	SCREW	4	
		---*---		

CONTINUED ON NEXT PAGE

FIGURE AND INDEX NO.	PART NUMBER	DESCRIPTION 1 2 3 4 5 6 7	UNITS PER ASSY	USABLE ON CODE
117 -36	0311058-4	GYRO-HORIZON-NEW WHEN EXHAUSTED ORDER AK172-116 KIT -----	1	
	0311058-5	GYRO-HORIZON-REBUILT WHEN EXHAUSTED USE S1309N1 ---------	1	
	S1309N1	GYRO-HORIZON-REBUILT WHEN EXHAUSTED USE C661001-0101 ----	1	
	C661001-0101	GYRO-HORIZON-REMANUFACTURED WHEN EXHAUSTED ---------- ORDER AK172-116 KIT	1	
		ATTACHING PARTS		
-37	AN520B10R16	SCREW ----------	4	
		---*---		
-38	MS20913-2D	PLUG ----------	1	
-39	MS20822-6-6B	ELBOW ----------	1	
-40	S1168-6-6 1/2	HOSE ASSEMBLY WHEN EXHAUSTED USE S1495-6 & S1497-6 ------	1	
	S1495-6 *	HOSE-6.50 IN LG BULK ITEM REF S1499-6-6.50 ----------	1	
	S1497-6	FITTING-SOCKETLESS USED WITH 1495-6 HOSE ----------	2	
-41	AN912-2	BUSHING-REDUCER ----------	1	
-42	MS20823-6B	ELBOW ----------	1	
-43	S1988-1	FITTING ----------	1	
-44	AN960D916	WASHER ----------	2	
-45	AN924-6D	NUT ----------	1	

NOTE. *WHEN INITIALLY ORDERING THIS PART ALSO ORDER TWO S1497-6 SOCKETLESS FITTINGS.

A---SERIAL 18051184 THRU 18051312

FIGURE AND INDEX NO.	PART NUMBER	DESCRIPTION 1 2 3 4 5 6 7	UNITS PER ASSY	USABLE ON CODE
117A-		VACUUM SYSTEM INSTALLATION-ENGINE DRIVEN	NP	A
- 1	C431001-0101	PUMP-VACUUM	1	
- 2	0750103-1	SEPARATOR-OIL	1	
		ATTACHING PARTS		
- 3	0750036-1	BRACKET	1	
- 4	AN3-15A	BOLT	2	
	AN960D10L	WASHER	2	
	MS21044N3	NUT	2	
		---*---		
- 5	133A3	VALVE-SUCTION RELIEF RAMF	1	
- 6	S1414N1	GAGE-SUCTION	1	
		ATTACHING PARTS		
- 7	AN5078632R12	SCREW	4	
		---*---		
- 8	S1495-8	HOSE-OIL RETURN 9.00 IN LG BULK ITEM REF S1431-8-9.00	1	
		ATTACHING PARTS		
- 9	AN844-8	ELBOW	1	
-10	NAS397-14	CLAMP	2	
		---*---		
-11	0750037-1	TUBE-INSERT	1	
-12	S1495-8	HOSE-VENT 2.00 IN LG BULK ITEM S1431-8-2.00	1	
		ATTACHING PARTS		
-13	NAS397-14	CLAMP	2	
		---*---		
-14	0500106-339	LINE-VENT	1	
-15	S1495-8	HOSE-DISCHARGE 3.25 IN LG BULK ITEM REF S1431-8-3.25	1	
		ATTACHING PARTS		
-16	IKI6-8	ELBOW RAMF	1	
-17	NAS397-14	CLAMP	2	
		---*---		
-18	S1495-10	HOSE-SUCTION 2.50 IN LG BULK ITEM REF S1431-10-0250	1	
-19	IKI6-10	ELBOW RAMF	1	
-20	NAS397-16	CLAMP	2	
		---*---		
-21	S1495-8	HOSE-SUCTION-FIREWALL TO HORIZONTAL GYRO 14.5 IN LG BULK ITEM REF S1431-8-1450	1	
		ATTACHING PARTS		
-22	NAS397-14	CLAMP	2	
-22A	IKI4-8	ELBOW RAMF	1	
		---*---		

CONTINUED ON NEXT PAGE

Vacuum System (Cont)

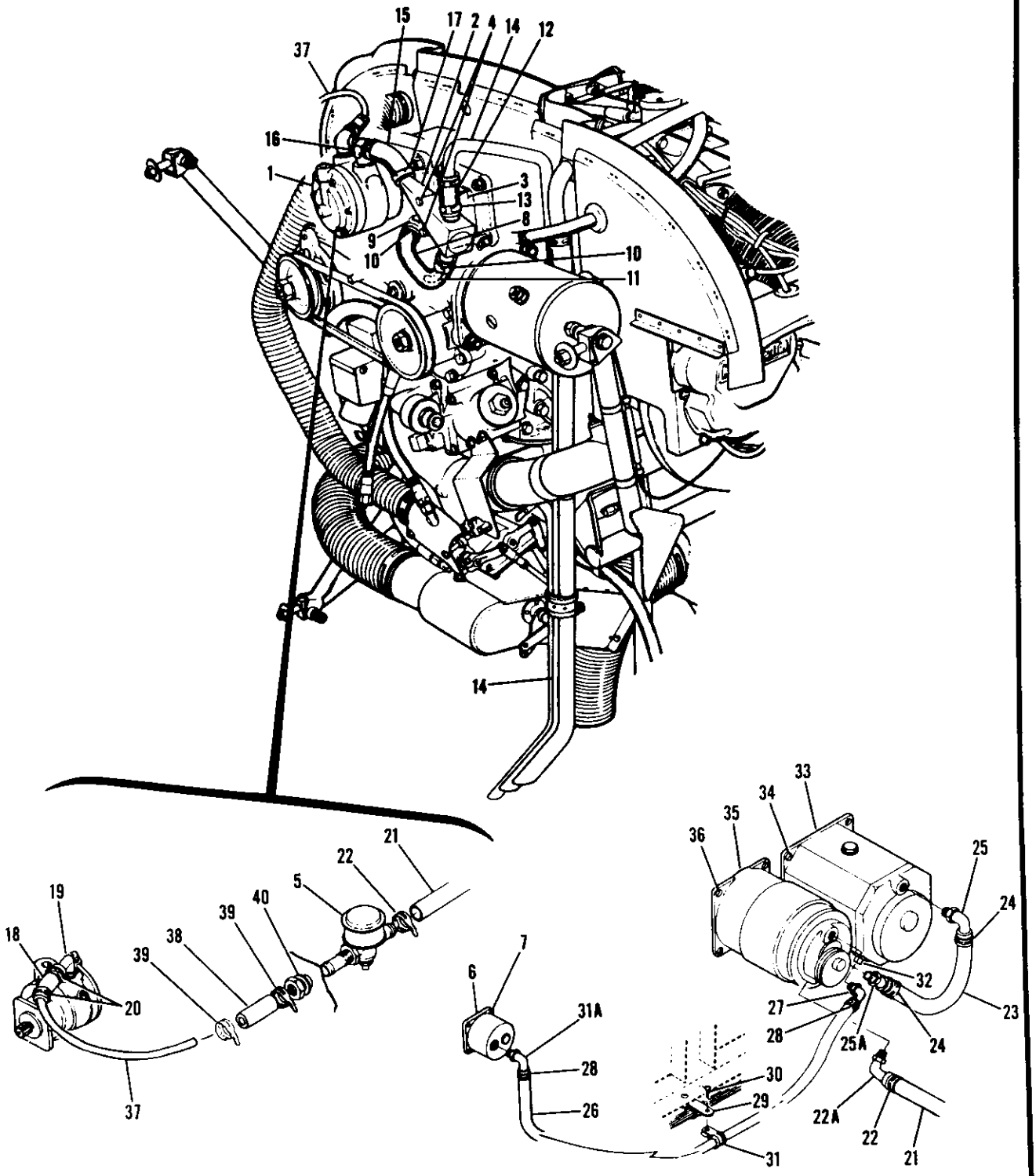

SERIAL 185-0654 THRU 185-0776
SERIAL 18051313 THRU 18051445

Figure 117A. Vacuum System Installation

FIGURE AND INDEX NO.	PART NUMBER	DESCRIPTION 1 2 3 4 5 6 7	UNITS PER ASSY	USABLE ON CODE
117A-23	S1495-6	HOSE-DIRECTIONAL GYRO TO HORIZONTAL GYRO 7.50 IN LG -----	1	
		BULK ITEM REF S1431-6-0750		
		ATTACHING PARTS		
-24	NAS397-12	CLAMP ----------	2	
-25	IK14-6	ELBOW RAMF ----------	1	
	IKI10-4-6	ADAPTER RAMF ----------	1	
		---*---		
-26	S1495-4	HOSE-HORIZONTAL GYRO TO SUCTION GAGE 43.00 IN LG --------	1	
		BULK ITEM REF S1431-4-4300		
		ATTACHING PARTS		
-27	IKI4-4	ELBOW RAMF ----------	1	
-28	NAS397-8	CLAMP ----------	2	
-29	1260043-2	STRAP ----------	1	
-30	S1021Z8-5	SCREW ----------	1	
-31	S1486DGBL	CLAMP ----------	1	
-31A	IKI2-4	ELBOW RAMF ----------	1	
		---*---		
-32	MS20913-2D	PLUG ----------	2	
-33	0311056-5	GYRO-DIRECTIONAL-NEW WHEN EXHAUSTED ORDER AK172-116 KIT -	1	
	S1316N1	GYRO-DIRECTIONAL-REBUILT WHEN EXHAUSTED USE C661002-0101-	1	
	S1476N1	GYRO-DIRECTIONAL ALTERNATE FOR S1316N1 WHEN ---------	1	
		EXHAUSTED USE C661002-0101		
	C661002-0101	GYRO-DIRECTIONAL-REMANUFACTURED WHEN EXHAUSTED ----------	1	
		ORDER AK172-116 KIT		
		ATTACHING PARTS		
-34	AN515B10R14	SCREW ----------	4	
	AN507B1032R16	SCREW USED WITH C661002-0101 ----------	3	
		---*---		
-35	0311058-4	GYRO-HORIZON-NEW WHEN EXHAUSTED ORDER AK172-116 KIT -----	1	
	S1309N1	GYRO-HORIZON-REBUILT WHEN EXHAUSTED USE C661001-0101 ----	1	
	S1472N1	GYRO-HORIZON ALTERNATE FOR S1309N1 WHEN ----------	1	
		EXHAUSTED USE C661001-0101		
	S1473N1	GYRO-HORIZON ALTERNATE FOR S1309N1 WHEN ----------	1	
		EXHAUSTED USE C661001-0101		
	C661001-0101	GYRO-HORIZON-REMANUFACTURED WHEN EXHAUSTED ----------	1	
		ORDER AK172-116 KIT		
		ATTACHING PARTS		
-36	AN520B10R16	SCREW ----------	4	
	2103	PLATE AIM USED WITH C661001-0101 ----------	1	
	AN507-1032R8	SCREW USED WITH C661001-0101 ----------	4	
	MS21044N3	NUT USED WITH C661001-0101 ----------	4	
		---*---		
-37	0700087-28	TUBE-SUCTION ----------	1	
-38	S1495-10	HOSE-SUCTION 3.75 IN LG BULK ITEM ----------	1	
		REF S1431-10-0375		
		ATTACHING PARTS		
-39	NAS397-16	CLAMP ----------	2	
		---*---		
-40	AN960-1416L	WASHER ----------	2	
		A---SERIAL 185-0654 THRU 185-0776		
		SERIAL 18051313 THRU 18051445		

Vacuum System (Cont)

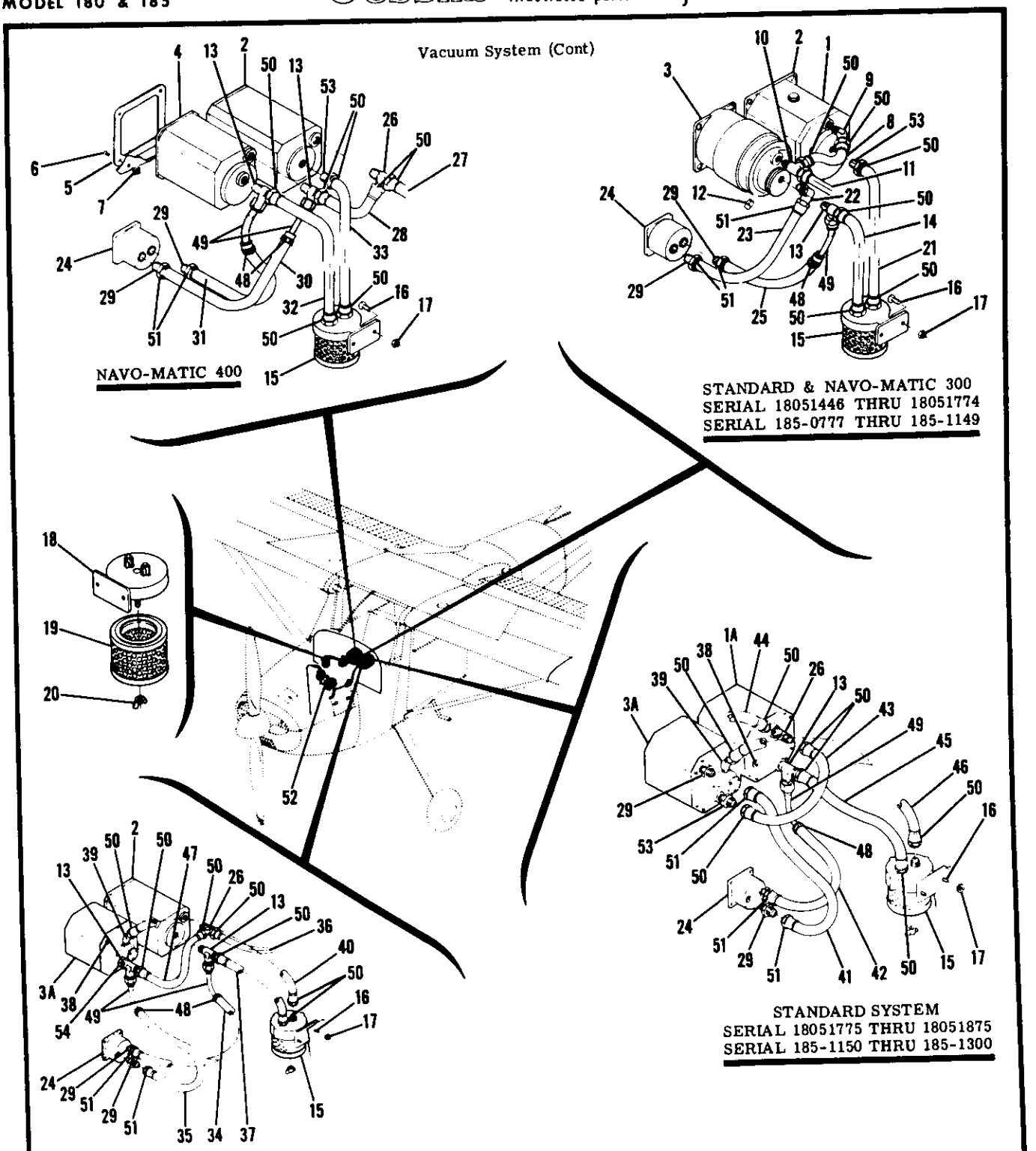

SERIAL 18051446 THRU 18051875
SERIAL 185-0777 THRU 185-1300

Figure 117B. Vacuum System Installation

FIGURE AND INDEX NO.	PART NUMBER	DESCRIPTION 1 2 3 4 5 6 7	UNITS PER ASSY	USABLE ON CODE
1178-		VACUUM SYSTEM INSTALLATION-ENGINE DRIVEN	NP	A
- 1	C661002-0101	GYRO-DIRECTIONAL REMANUFACTURED WHEN EXHAUSTED ORDER AK172-116 KIT	1	B
- 1A	C661002-0201	GYRO-DIRECTIONAL	1	C
	C661002-0201R	GYRO-DIRECTIONAL RECONDITIONED	1	C
- 2	30370-0100	GYRO-DIRECTIONAL ARC USED WITH NAVO-MATIC 300 & 400	1	
- 3	C661001-0101	GYRO-HORIZON REMANUFACTURED WHEN EXHAUSTED ORDER AK172-116 KIT	1	B
- 3A	C661001-0201	GYRO-HORIZON	1	C
	C661001-0201R	GYRO-HORIZON RECONDITIONED	1	C
- 4	30475-0000	GYRO-HORIZON ARC USED WITH NAV-O-MATIC 400	1	
		ATTACHING PARTS		
- 5	2103	PLATE AIM	1	
- 6	AN507-1032R8	SCREW	4	
- 7	MS21044N3	NUT	4	
		---*---		
- 8	S1616-6LL-3.62	HOSE ASSEMBLY	1	B
- 9	AN323-6D	ELBOW	1	B
	MS20822-6D	ELBOW USED ON NAVO-MATIC 300 ONLY	1	B
-10	MS20826-6D	TEE	1	B
-11	S1616-6LL-10.00	HOSE ASSEMBLY	1	B
-12	MS20913-2D	PLUG	3	B
-13	MS20826-6D	TEE	2	
-14	S1495-6	HOSE-9.50 IN LG BULK ITEM REF S1499-6LL-9.50	1	B
-15	C294501-0101	AIR FILTER ASSEMBLY	1	
		ATTACHING PARTS		
-16	AN3-4A	BOLT	2	
-17	MS21044N3	NUT	2	
		---*---		
-18	C294501-0102	BRACKET	1	
-19	C294501-0103	FILTER ELEMENT	1	
		ATTACHING PARTS		
-20	P2274	NUT-WING DCI	1	
		---*---		
-21	S1495-6	HOSE-13.50 IN LG BULK ITEM REF S1499-6LL-13.50	1	B
-22	MS20822-4-4D	ELBOW	1	B
-23	S1495-4	HOSE-12.00 IN LG BULK ITEM REF S1499-4JJ-12.00	1	B
-24	S1414N1	GAGE-SUCTION	1	
-25	S1495-4	HOSE-11.50 IN LG BULK ITEM REF S1499-4JJ-11.50	1	B
-26	MS20826-6D	TEE	2	
-27	S1495-6	HOSE-11.00 IN LG BULK ITEM REF S-1499-6LL-11.00	1	
-28	S1495-6	HOSE-5.50 IN LG BULK ITEM REF S1499-6LL-5.50	1	
-29	AN816-4D	NIPPLE	3	
-30	S1495-4	HOSE-9.50 IN LG BULK ITEM REF S1499-4JJ-9.50	1	
-31	S1495-4	HOSE-12.00 IN LG BULK ITEM REF S1499-4JJ-12.00	1	
-32	S1495-6	HOSE-9.50 IN LG BULK ITEM REF S1499-6LL-9.50	1	
-33	S1495-6	HOSE-13.50 IN LG BULK ITEM REF S1499-6LL-13.50	1	
-34	S1495-4	HOSE-* IN LG BULK ITEM REF S1691-1-*	1	C
-35	S1495-4	HOSE-* IN LG BULK ITEM REF S1691-1-*	1	C
-36	S1495-6	HOSE-* IN LG BULK ITEM REF S1499-6LL-*	1	C
-37	S1495-6	HOSE-* IN LG BULK ITEM REF S1499-6LL-*	1	C
-38	MS20913-1D	PLUG	1	C
-39	MS20823-6D	ELBOW	1	C
-40	S1495-6	HOSE-* IN LG BULK ITEM REF S1499-6LL-*	1	C
-41	S1495-4	HOSE-* IN LG BULK ITEM REF S1499-4JJ-*	1	C
-42	S1495-4	HOSE-* IN LG BULK ITEM REF S1691-1-*	1	C
-43	S1616-6LL- *	HOSE ASSEMBLY	1	C
-44	S1495-6	HOSE-* IN LG BULK ITEM REF S1499-6LL-*	1	C
-45	S1495-6	HOSE-* IN LG BULK ITEM REF S1499-6LL-*	1	C
-46	S1495-6	HOSE-* IN LG BULK ITEM REF S1499-6LL-*	1	C
-47	S1616-6LL- *	HOSE ASSEMBLY	1	C

CONTINUED ON NEXT PAGE

FIGURE AND INDEX NO.	PART NUMBER	DESCRIPTION 1 2 3 4 5 6 7	UNITS PER ASSY	USABLE ON CODE
117B-48	NAS397-8 #	CLAMP	2	
-49	1713039-1 #	ELBOW ASSEMBLY	2	
-50	S1497-6	FITTING	5	
-51	S1497-4	FITTING	3	
-52	SEE FIG 117D	VACUUM SYSTEM-FORWARD OF FIREWALL	1	
-53	AN816-6D	NIPPLE	1	
-54	0713837-1	CONNECTOR	1	
		NOTE. %WHEN ORDERING THIS PART FOR AIRCRAFT SERIAL 18051446 THRU 18051740 & SERIAL 185-0777 THRU 185-1088, ALSO ORDER PARTS MARKED #.		
		NOTE. *LENGTH TO BE DETERMINED LATER		
		A---SERIAL 18051446 THRU 18051875 SERIAL 185-0777 THRU 185-1300 B---SERIAL 18051446 THRU 18051774 SERIAL 185-0777 THRU 185-1149 C---SERIAL 18051775 THRU 18051875 SERIAL 185-1150 THRU 185-1300		

FIGURE AND INDEX NO.	PART NUMBER	DESCRIPTION 1 2 3 4 5 6 7	UNITS PER ASSY	USABLE ON CODE
117C-		VACUUM SYSTEM INSTALLATION-ENGINE DRIVEN ----------	NP	A
- 1	C661002-0501 **	GYRO-DIRECTIONAL WEU C661075-0101 ----------	1	C
	C661002-0505 **	GYRO-DIRECTIONAL WEU C661075-0101 ----------	1	D
	C661075-0102 **	GYRO-DIRECTIONAL WEU C661075-0101 ----------	1	F
	C661002-0301 **	GYRO-DIRECTIONAL WEU C661075-0104 ----------	1	E
	C661075-0104 **	GYRO-DIRECTIONAL ----------	1	F
	C661002-0503 **	GYRO-DIRECTIONAL WEU C661002-0506 ----------	1	C
	C661002-0506 **	GYRO-DIRECTIONAL WEU C661075-0103 ----------	1	D
	C661075-0103 **	GYRO-DIRECTIONAL ----------	1	F
	C661002-0504 **	GYRO-DIRECTIONAL WEU C661075-0101 ----------	1	E
	C661075-0101 **	GYRO-DIRECTIONAL ----------	1	F
	C661075-0106 **	GYRO-DIRECTIONAL ----------	1	F
- 2	30370-0100	GYRO-DIRECTIONAL ARC USED WITH NAVO-MATIC 300 & 400 - WEU 30370-0102	1	
	30370-0102	GYRO-DIRECTIONAL ARC USED WITH NAVO-MATIC 300 & 400 -	1	G
	40760-0104	GYRO-DIRECTIONAL ARC USED WITH NAVO-MATIC 300 -------	1	H

CONTINUED ON NEXT PAGE

Vacuum System (Cont)

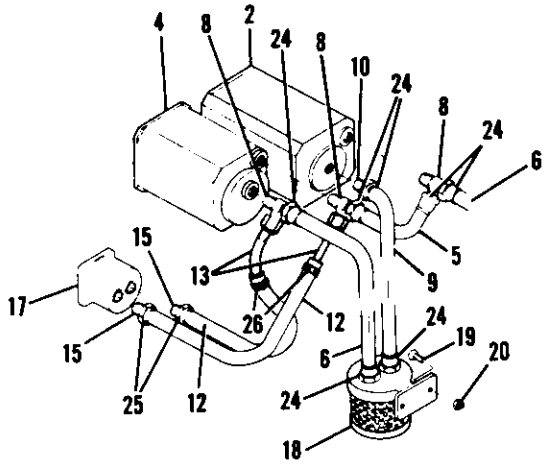

NAVO-MATIC 400
SERIAL 185-1301 THRU 185-1447
SERIAL 18051876 THRU 18051993

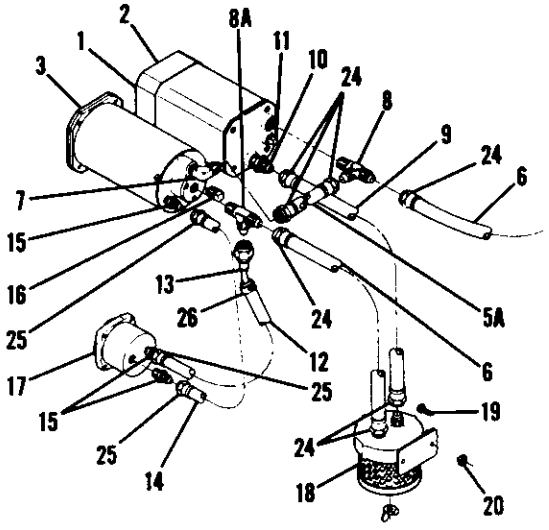

STD & NAVO-MATIC 300

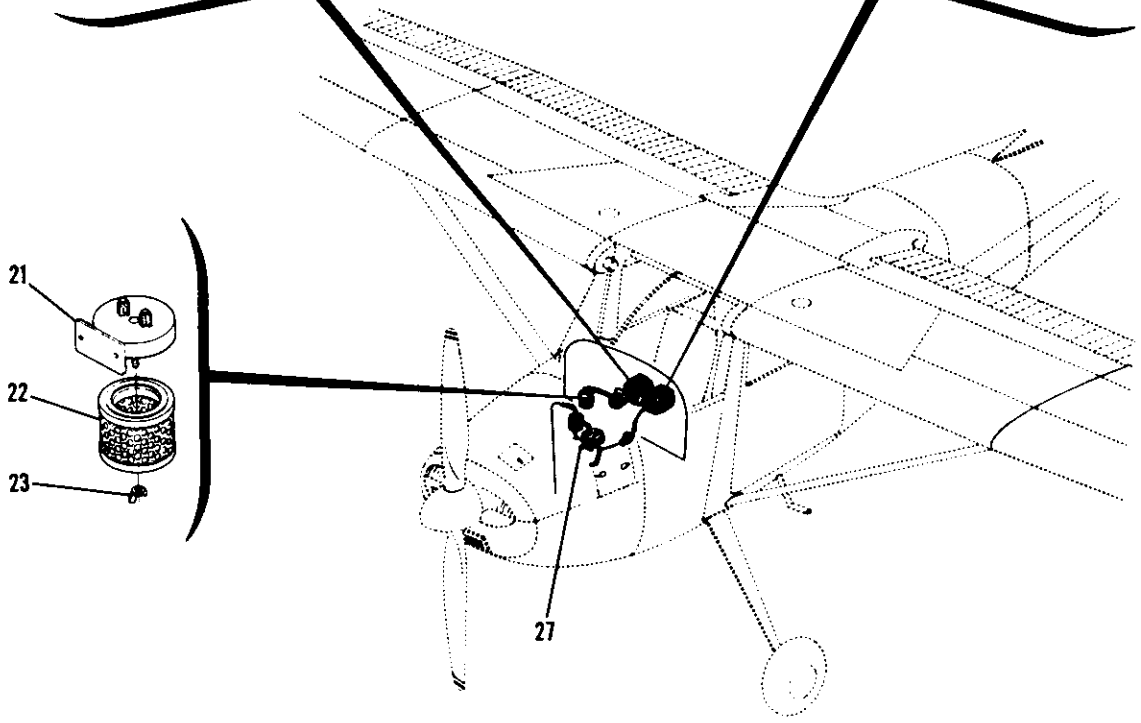

SERIAL 185-1301 THRU 18502142
SERIAL 18051876 THRU 18052309

Figure 117C. Vacuum System Installation

FIGURE AND INDEX NO.	PART NUMBER	DESCRIPTION 1 2 3 4 5 6 7	UNITS PER ASSY	USABLE ON CODE
117C- 3	C661001-0501 *	GYRO-HORIZON WEU C661001-0505	1	C
	C661001-0505 *	GYRO-HORIZON WEU C661076-0104	1	D
	C661076-0104 *	GYRO-HORIZON WEU C661076-0103	1	F
	C661001-0502 *	GYRO-HORIZON WEU C661076-0101	1	E
	C661076-0101 *	GYRO-HORIZON	1	F
	C661001-0503 *	GYRO-HORIZON WEU C661076-0102	1	E
	C661076-0102 *	GYRO-HORIZON	1	F
	C661001-0504 *	GYRO-HORIZON WEU C661076-0103	1	E
	C661076-0103 *	GYRO-HORIZON	1	F
	C661076-0105 *	GYRO-HORIZON	1	F
- 4	37570-0001	GYRO-HORIZON ARC USED WITH NAVO-MATIC 400	1	A
- 5	S1495-6	HOSE-10.00 IN LG BULK ITEM REF S1499-6LL-10.00	1	B
- 5A	S1495-6	HOSE-10.00 IN LG BKI REF S1499-6LL-10.00	1	
	S1495-6	HOSE-10.50 IN LG BKI REF S1499-6LL-10.50	1	
		USED WHEN C661076-0103 IS INSTALLED		
- 6	S1495-6	HOSE-14.75 IN LG BULK ITEM REF S1499-6LL-14.75	2	
- 7	MS20822-6D	ELBOW-90 DEG	1	
	MS20823-6D	ELBOW-45 DEG USED WITH C661001-0504 OR C661076-0105	1	
	AN816-6D	NIPPLE USED WHEN C661076-0103 IS INSTALLED	1	
- 8	MS20826-6D	TEE	3	
- 8A	MS20826-6D	TEE	1	
	MS20825-6D	TEE USED WHEN C661076-0105 IS INSTALLED	1	
- 9	S1495-6	HOSE-19.75 IN LG BULK ITEM REF S1499-6LL-19.75	1	
-10	AN816-6D	NIPPLE	1	
-11	MS20913-1D	PLUG	1	
-12	S1495-4	HOSE-12.00 IN LG BULK ITEM REF S1691-1-12.00	2	
-13	1713039-1	ELBOW ASSEMBLY	2	
-14	S1495-4	HOSE-16.00 IN LG BULK ITEM REF S1499-4JJ-16.00	1	
-15	AN816-4D	NIPPLE	3	
-16	MS20913-2D	PLUG	1	
-17	S1414N1	GAGE-SUCTION WEU C668540-0101	1	E
	C668540-0101	GAGE-SUCTION	1	F
-18	C294501-0101	AIR FILTER ASSEMBLY	1	
		ATTACHING PARTS		
-19	AN3-4A	BOLT	2	
-20	MS21044N3	NUT	2	
		---*---		
-21	C294501-0102	BRACKET	1	
-22	C294501-0103	FILTER ELEMENT	1	
		ATTACHING PARTS		
-23	P2274	NUT-WING DCI	1	
		---*---		
-24	S1497-6	END FITTING	8	
-25	S1497-4	END FITTING	3	
-26	NAS397-8	CLAMP	2	
-27		VACUUM SYSTEM-FORWARD OF FIREWALL SEE FIGURE 117D	1	

NOTE. *THESE GYROS ARE PHYSICALLY & FUNCTIONALLY INTERCHANGEABLE.

NOTE. **THESE GYROS ARE PHYSICALLY & FUNCTIONALLY INTERCHANGEABLE.

A---SERIAL 185-1301 THRU 18502142
SERIAL 18051876 THRU 18052309
B---SERIAL 185-1301 THRU 185-1447
SERIAL 18051876 THRU 18051993
C---SERIAL 185-1301 THRU 18501797
SERIAL 18051876 THRU 18052163
D---SERIAL 18501798 THRU 18501934
SERIAL 18052164 THRU 18052221
E---SERIAL 185-1301 THRU 18501934
SERIAL 18051876 THRU 18052221
F---SERIAL 18501935 THRU 18502142
SERIAL 18052222 THRU 18052309
G---SERIAL 18501935 THRU 18502090
SERIAL 18052222 THRU 18052284
H---SERIAL 18502091 THRU 18502142
SERIAL 18052285 THRU 18052309

Vacuum System (Cont)

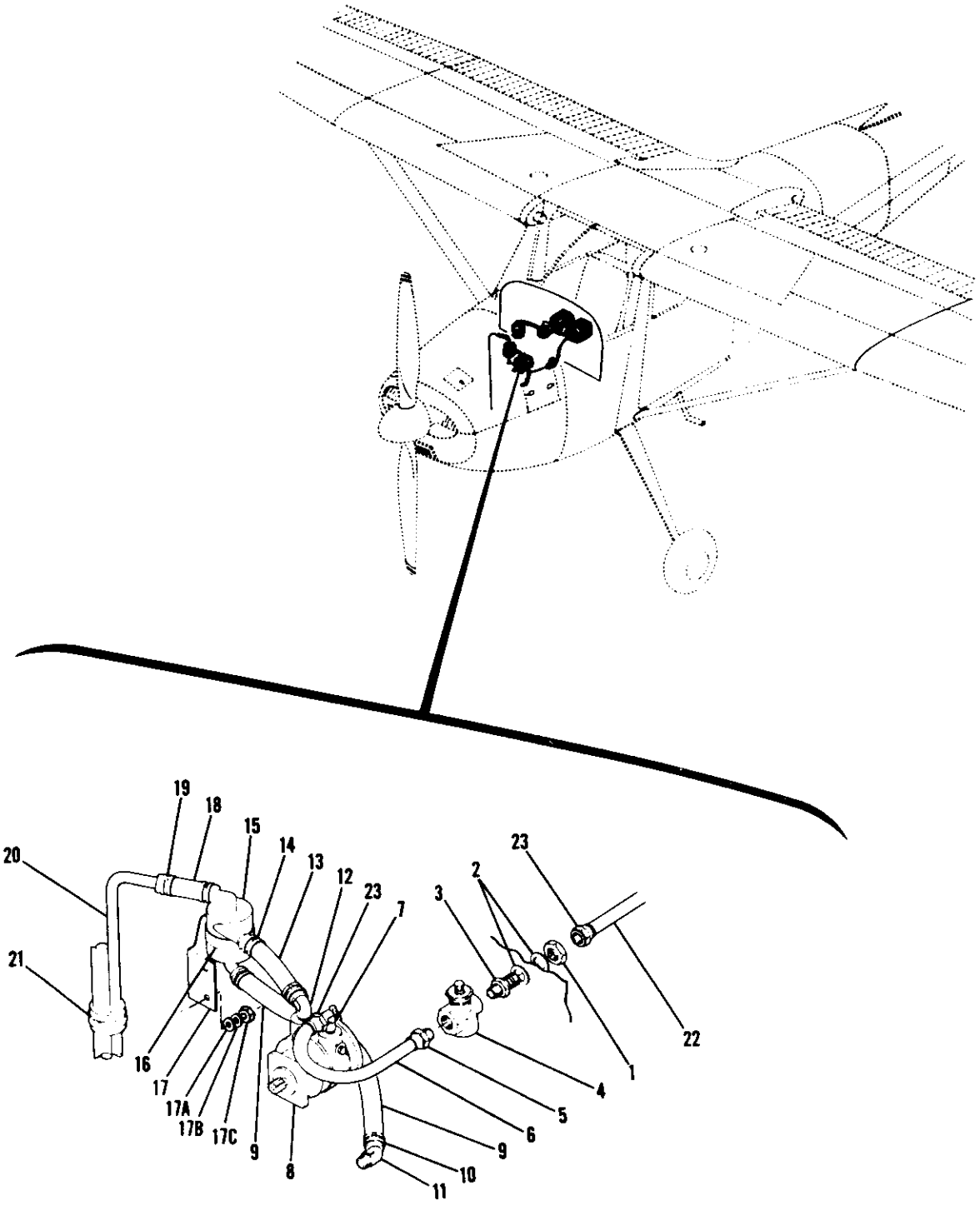

SERIAL 185-0777 THRU 18502142
SERIAL 18051446 THRU 18052309

Figure 117D. Vacuum System Installation-Forward Of Firewall

FIGURE AND INDEX NO.	PART NUMBER	DESCRIPTION 1 2 3 4 5 6 7	UNITS PER ASSY	USABLE ON CODE
1170-		VACUUM SYSTEM INSTALLATION-FWD OF FIREWALL	NP	A
- 1	AN924-6D	NUT	1	
- 2	AN960D916	WASHER	2	
- 3	S1988-1	FITTING	1	
- 4	C482001-0101	VALVE-VACUUM RELIEF	1	
- 5	S1496-6A	FITTING-SOCKETLESS MALE PIPE THREAD & HOSE	1	
- 6	S1495-6	HOSE-10.00 IN LG BULK ITEM REF S1499-6DL-10.00	1	
- 7	MS20822-6-6B	ELBOW	1	
- 8	C431001-0101	PUMP-VACUUM	1	
- 9	S1495-8	HOSE-7.00 IN LG BULK ITEM REF S1495-8-7.00	1	
		ATTACHING PARTS		
-10	NAS397-14	CLAMP	2	
		---*---		
-11	AN844-8D	ELBOW	1	
-12	AN842-8	ELBOW	1	
-13	S1495-8	HOSE-4.00 IN LG BULK ITEM REF S1495-8-4.00	1	
		ATTACHING PARTS		
-14	NAS397-14	CLAMP	2	
		---*---		
-15	C165001-0102	SEPARATOR	1	
		ATTACHING PARTS		
-16	AN735D36	CLAMP	1	
	AN520-10R12	SCREW	1	
	MS21044N3	NUT	1	
		---*---		
-17	0750025-1	BRACKET	1	
		ATTACHING PARTS		
-17A	AN936A416	WASHER	2	
-17B	AN960-416	WASHER	2	
-17C	AN315-4R	NUT	2	
		---*---		
-18	S1495-8	HOSE-2.00 IN LG BULK ITEM REF S1495-8-2.00	1	
		ATTACHING PARTS		
-19	NAS397-14	CLAMP	2	
		---*---		
-20	0700147-2	VENT TUBE	1	
-21	S1590-4A	CLAMP UC	1	
-22	S1495-6	HOSE-GYRO TO FIREWALL SEE FIGURE 1178	1	
-23	S1497-6	FITTING-SOCKETLESS SWIVEL AND HOSE	1	

A---SERIAL 185-0777 THRU 18502142
SERIAL 18051446 THRU 18052309

Vacuum System (Cont)

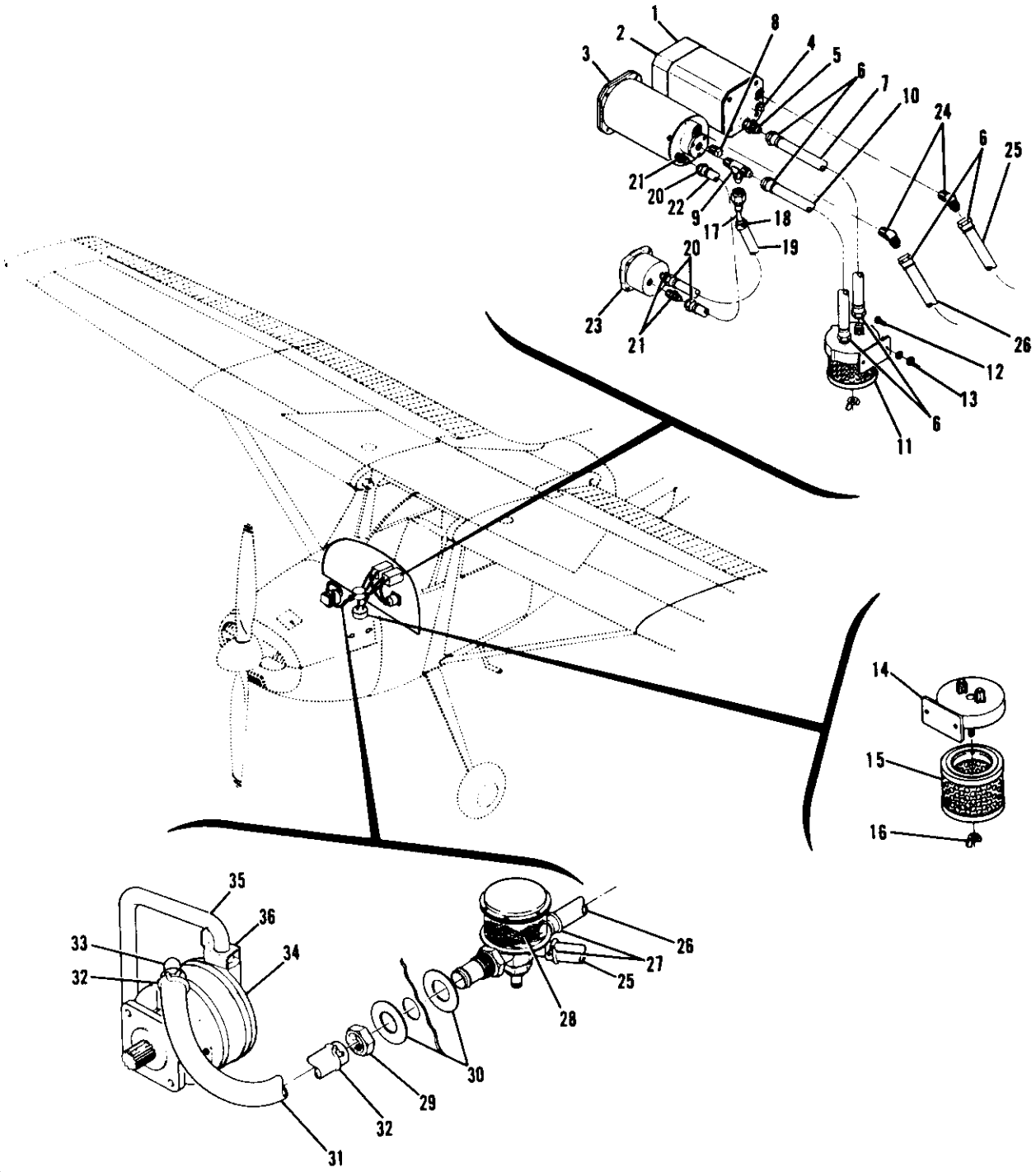

SERIAL 18502143 THRU 18502310
SERIAL 18052310 THRU 18052384

Figure 117E. Vacuum System

FIGURE AND INDEX NO.	PART NUMBER	DESCRIPTION 1 2 3 4 5 6 7	UNITS PER ASSY	USABLE ON CODE
117E-		VACUUM SYSTEM	NP	A
- 1	C661075-0101 **	GYRO-DIRECTIONAL	1	
	C661075-0103 **	GYRO-DIRECTIONAL	1	
	C661075-0104 **	GYRO-DIRECTIONAL	1	
	C661075-0106 **	GYRO-DIRECTIONAL	1	
- 2	40760-0104	GYRO-DIRECTIONAL ARC USED WITH NAV-O-MATIC 300	1	
- 3	C661076-0101 *	GYRO-HORIZON	1	
	C661076-0102 *	GYRO-HORIZON	1	
	C661076-0103 *	GYRO-HORIZON	1	
	C661076-0105 *	GYRO-HORIZON	1	
		ATTACHING PARTS		
	AN507-632R8	SCREW	4	
		---*---		
- 4	MS20913-1D	PLUG	1	
- 5	AN816-6D	NIPPLE	1	
- 6	S1497-6	END FITTING	6	
- 7	S1495-6	HOSE-19.75 IN LG BULK ITEM REFS1499-6LL-19.75	1	
- 8	MS20913-2D	PLUG	1	
- 9	MS20826-6D	TEE	1	
	MS20825-6D	TEE USED WHEN C661076-0105 IS INSTALLED	1	
-10	S1495-6	HOSE-14.75 IN LG BULK ITEM REF S1499-6LL-14.75	1	
-11	C294501-0101	AIR FILTER ASSEMBLY	1	
		ATTACHING PARTS		
-12	AN3-4A	BOLT	2	
-13	MS21044N3	NUT	2	
		---*---		
-14	C294501-0102	BRACKET	1	
-15	C294501-0103	FILTER ELEMENT	1	
		ATTACHING PARTS		
-16	P2274	NUT-WING DC1	1	
		---*---		
-17	1713039-1	ELBOW ASSEMBLY	1	
-18	NAS397-8	CLAMP	1	
-19	S1495-4	HOSE-12.00 IN LG BULK ITEM REF S1691-1-12.00	1	
-20	S1497-4	END FITTING	3	
-21	AN816-4D	NIPPLE	3	
-22	S1495-4	HOSE-16.00 IN LG BULK ITEM REF S1499-4JJ-16.00	1	
-23	C668540-0101	GAGE-SUCTION	1	
-24	MS20823-6D	ELBOW-45 DEG	2	
-25	S1495-6	HOSE-12.00 IN LG BULK ITEM REF S1499-6L-12.00	1	
-26	S1495-6	HOSE-10.50 IN LG BULK ITEM REF S1499-6L-10.50	1	
		ATTACHING PARTS		
-27	S1494-6	CLAMP	1	
		---*---		
-28	C482001-0401	VALVE-RELIEF	1	
		ATTACHING PARTS		
-29	AN924-10D	NUT	1	
-30	AN960D1416L	WASHER	2	
		---*---		
-31	S1495-10	HOSE-15.50 IN LG BULK ITEM REF S1495-10-15.50	1	
		ATTACHING PARTS		
-32	S1494-16	CLAMP	2	
		---*---		
-33	1K1-6-10	FITTING AMSA	1	
-34	C431003-0102	PUMP-VACUUM	1	
	C431003-0302	PUMP-VACUUM ALT	1	
-35	1K66-1	TUBE ABNE	1	
-36	1250319-1	LOCATOR	1	

NOTE. *THESE GYROS ARE PHYSICALLY & FUNCTIONALLY INTERCHANGEABLE.

NOTE. **THESE GYROS ARE PHYSICALLY & FUNCTIONALLY INTERCHANGEABLE.

A---SERIAL 18502143 THRU 18502310
SERIAL 18052310 THRU 18052384

Fuel System (Cont)

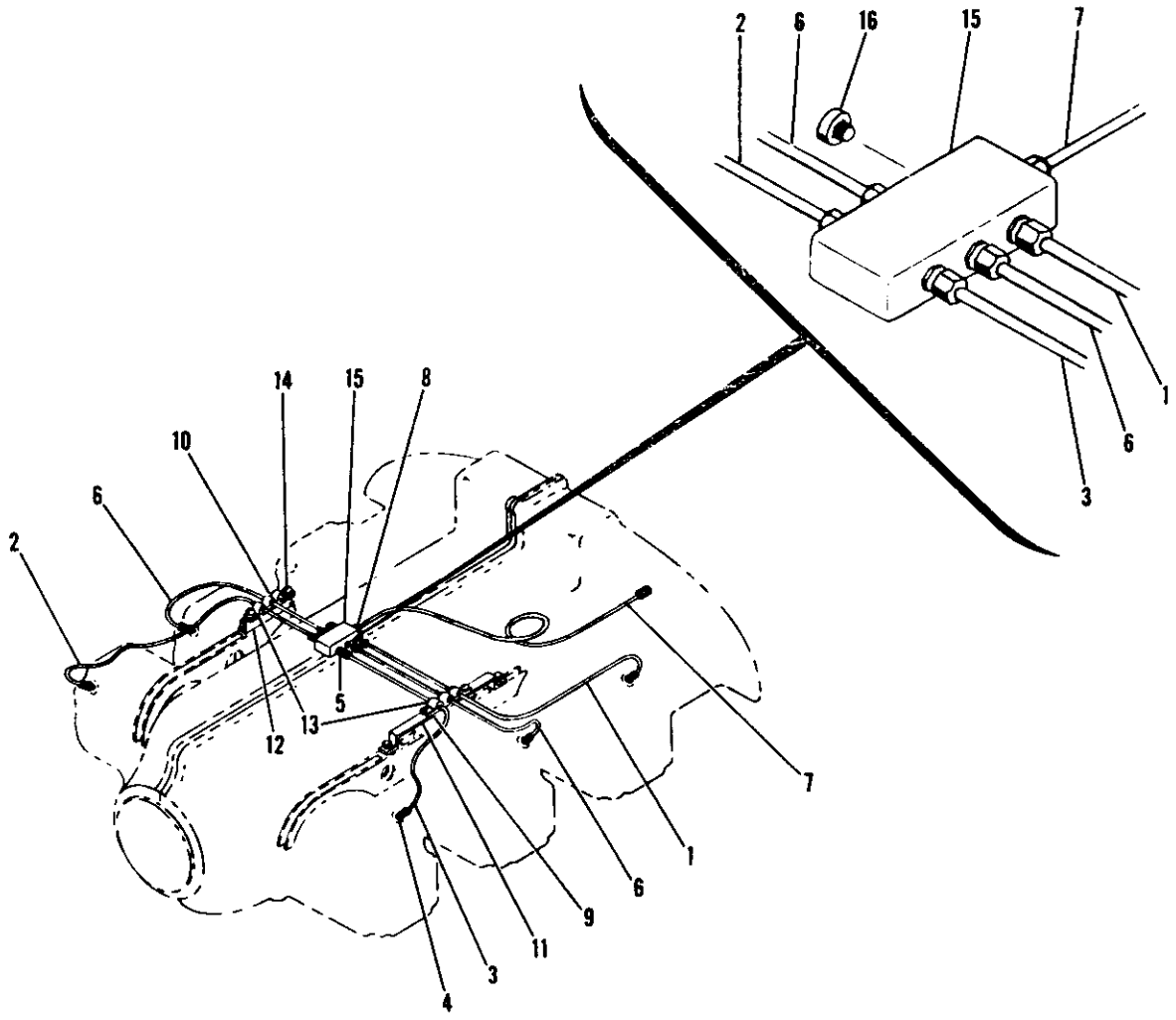

SERIAL 18051184 THRU 18052384

Figure 118. Fuel Primer System Installation

FIGURE AND INDEX NO.	PART NUMBER	DESCRIPTION 1 2 3 4 5 6 7	UNITS PER ASSY	USABLE ON CODE
118 -		FUEL PRIMER FIVE LINE SYSTEM INSTALLATION	NP	A
- 1	0750125-1	LINE ASSEMBLY-CYLINDER 2 TO DISTRIBUTOR	1	
		ATTACHING PARTS		
	AN4022-1	JET-FUEL	1	
	AN780-2	NIPPLE	1	
		---*---		
- 2	0750125-2	LINE ASSEMBLY-CYLINDER 5 TO DISTRIBUTOR	1	
		ATTACHING PARTS		
	AN4022-1	JET-FUEL	1	
	AN780-2	NIPPLE	1	
		---*---		
- 3	0750125-3	LINE ASSEMBLY-CYLINDER 6 TO DISTRIBUTOR	1	
		ATTACHING PARTS		
- 4	AN4022-1	JET-FUEL	1	
- 5	AN780-2	NIPPLE	1	
		---*---		
- 6	0750125-4	LINE ASSEMBLY-CYLINDER 3 AND 4 TO DISTRIBUTOR	2	
		ATTACHING PARTS		
	AN4022-1	JET-FUEL	1	
	AN780-2	NIPPLE	1	
		---*---		
- 7	0500106-173	LINE ASSEMBLY-DISTRIBUTOR TO BAFFLE WHEN EXHAUSTED USE 0700099-83	1	
	0700099-83	LINE ASSEMBLY-DISTRIBUTOR TO BAFFLE	1	
		ATTACHING PARTS		
- 8	AN816-2D	NIPPLE	1	
		---*---		
- 9	0750125-5	CLAMP ASSEMBLY-LH	1	
-10	0750125-6	CLAMP ASSEMBLY-RH	1	
-11	0750125-7	BRACKET-MOUNTING LH	1	
-12	0750125-8	BRACKET-MOUNTING RH	1	
-13	0750125-9	CLAMP	2	
		ATTACHING PARTS		
-14	S1021Z10-6	SCREW	4	
	0750125-11	NUT	4	
		---*---		
-15	0750125-10	DISTRIBUTOR-FUEL	1	
		ATTACHING PARTS		
	AN5-15A	BOLT	1	
		---*---		
-16	MS20913-1D	PLUG-DISTRIBUTOR	1	
		A---SERIAL 18051184 THRU 18052384		

Fuel System (Cont)

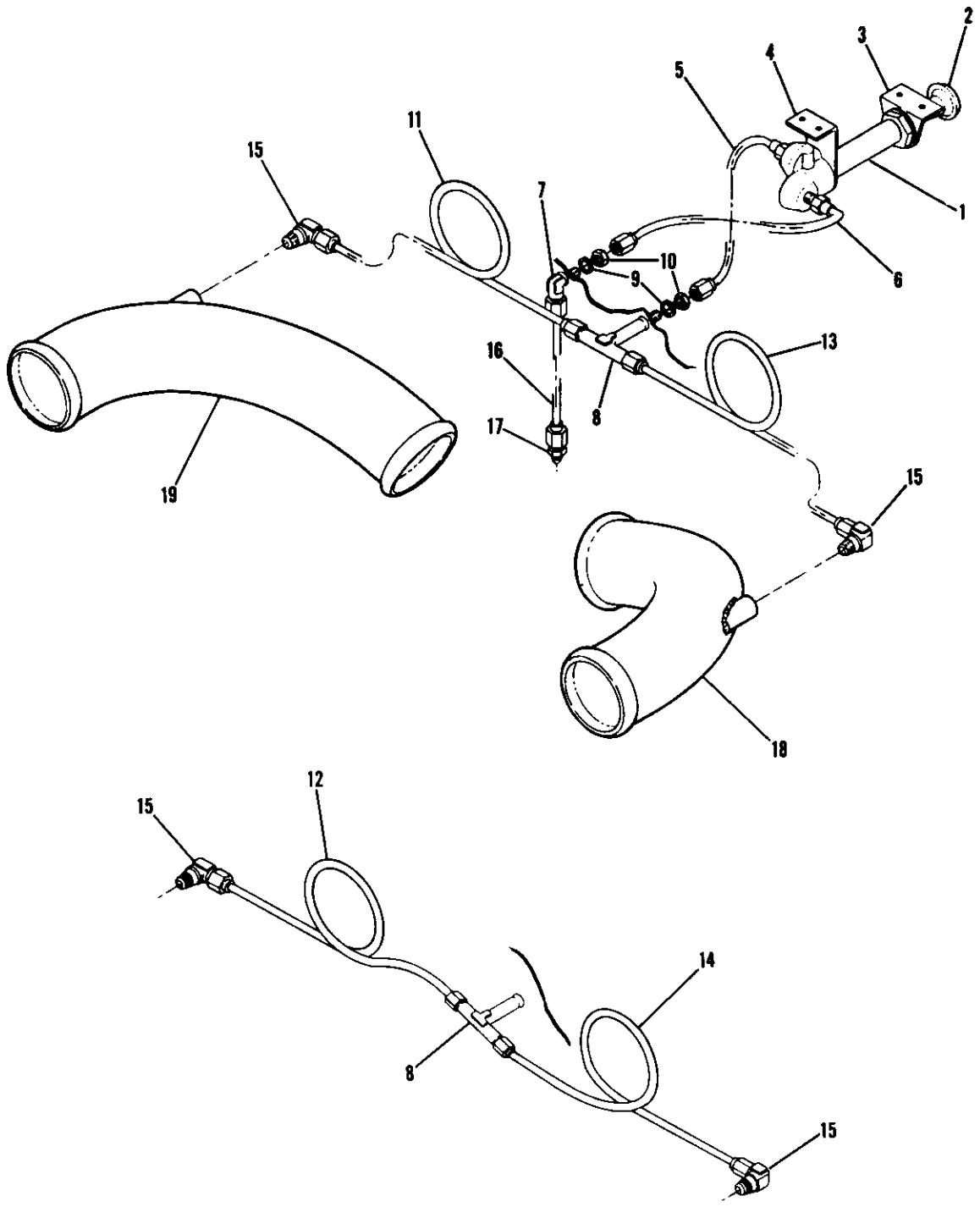

SERIAL 18051313 THRU 18052384
SERIAL 185-0654 THRU 18502310

Figure 118A. Fuel Primer System Installation

FIGURE AND INDEX NO.	PART NUMBER	DESCRIPTION 1 2 3 4 5 6 7	UNITS PER ASSY	USABLE ON CODE
118A-		FUEL PRIMER SYSTEM INSTALLATION ----------	NP	A
- 1	0311538-12	PRIMER ASSEMBLY-HAND WHEN EXHAUSTED USE C291502-0101 ----	1	M
	C291502-0101	PRIMER ASSEMBLY-HAND ----------	1	P
	C291502-0103	PRIMER ASSEMBLY-HAND ----------	1	Q
- 2	S1240-5	KNOB ----------	1	M
	S1752-1	KNOB ----------	1	P
	S1974-1	KNOB ----------	1	Q
- 3	0713234-2	BRACKET-PRIMER ----------	1	C
- 4	0713234-1	BRACKET-PRIMER ----------	1	C
- 5	0700087-23	LINE-PRIMER ----------	1	D
	0700087-29	LINE-PRIMER WHEN EXHAUSTED USE 0700147-51 ----------	1	E
	0700147-51	LINE-PRIMER ----------	1	E
- 6	0700087-24	LINE-PRIMER ----------	1	D
	0700087-30	LINE-PRIMER WHEN EXHAUSTED USE 0700147-52 ----------	1	E
	0700147-52	LINE-PRIMER ----------	1	E
- 7	AN833-2D	ELBOW ----------	1	K
	AN832-2D	UNION ----------	1	L
- 8	AN834-2D	TEE ----------	1	
		ATTACHING PARTS		
- 9	AN960-516L	WASHER ----------	1	
-10	AN924-2D	NUT ----------	1	
		---*---		
-11	0700087-26	LINE-PRIMER RH WHEN EXHAUSTED USE 0700147-53 ----------	1	C
	0700147-53	LINE-PRIMER RH ----------	1	C
-12	0700087-22	LINE-PRIMER RH WHEN EXHAUSTED USE 0700147-50 ----------	1	B
	0700147-50	LINE-PRIMER RH ----------	1	B
-13	0700087-27	LINE-PRIMER LH WHEN EXHAUSTED USE 0700147-48 ----------	1	C
	0700147-48	LINE-PRIMER LH ----------	1	C
-14	0700087-21	LINE-PRIMER LH WHEN EXHAUSTED USE 0700147-49 ----------	1	B
	0700147-49	LINE-PRIMER LH ----------	1	B
		ATTACHING PARTS		
-15	AN4023-1	ELBOW-PRIMING JET ----------	1	
		---*---		
-16	0500106-202	LINE-PRIMER ----------	1	F
	0700147-14	LINE-PRIMER ----------	1	G
	0700147-17	LINE-PRIMER WHEN EXHAUSTED USE 0700147-47 ----------	1	H
	0700147-47	LINE-PRIMER ----------	1	H
	0700147-45	LINE-PRIMER USED WITH OIL DILUTION ONLY ----------	1	H
		ATTACHING PARTS		
-17	AN816-2D	NIPPLE ----------	1	J
	MS20823-2D	ELBOW ----------	1	H
		---*---		
-18	0716134-2	MANIFOLD-LH ----------	1	C
-19	0716134-3	MANIFOLD-RH ----------	1	C

A---SERIAL 18051313 THRU 18052384
SERIAL 185-0654 THRU 18502310
B---SERIAL 18051313 THRU 18052384
C---SERIAL 185-0654 THRU 18502310
D---SERIAL 18051313 THRU 18051445
SERIAL 185-0654 THRU 185-0776
E---SERIAL 18051446 THRU 18052384
SERIAL 185-0777 THRU 18502310
F---SERIAL 18051313 THRU 18051496
SERIAL 185-0654 THRU 185-0843
G---SERIAL 18051497 THRU 18051655
SERIAL 185-0844 THRU 185-0983
H---SERIAL 18051656 THRU 18052384
SERIAL 185-0984 THRU 18502310
J---SERIAL 18051313 THRU 18051655
SERIAL 185-0654 THRU 185-0983
K---SERIAL 185-0654 THRU 185-0983
L---SERIAL 185-0984 THRU 18502310
M---SERIAL 18051313 THRU 18051875
SERIAL 185-0654 THRU 185-1300
N---SERIAL 18051876 THRU 18052384
SERIAL 185-1301 THRU 18502310
P---SERIAL 18051876 THRU 18052103
SERIAL 185-1301 THRU 185-1599
Q---SERIAL 18052104 THRU 18052384
SERIAL 18501600 THRU 18502310

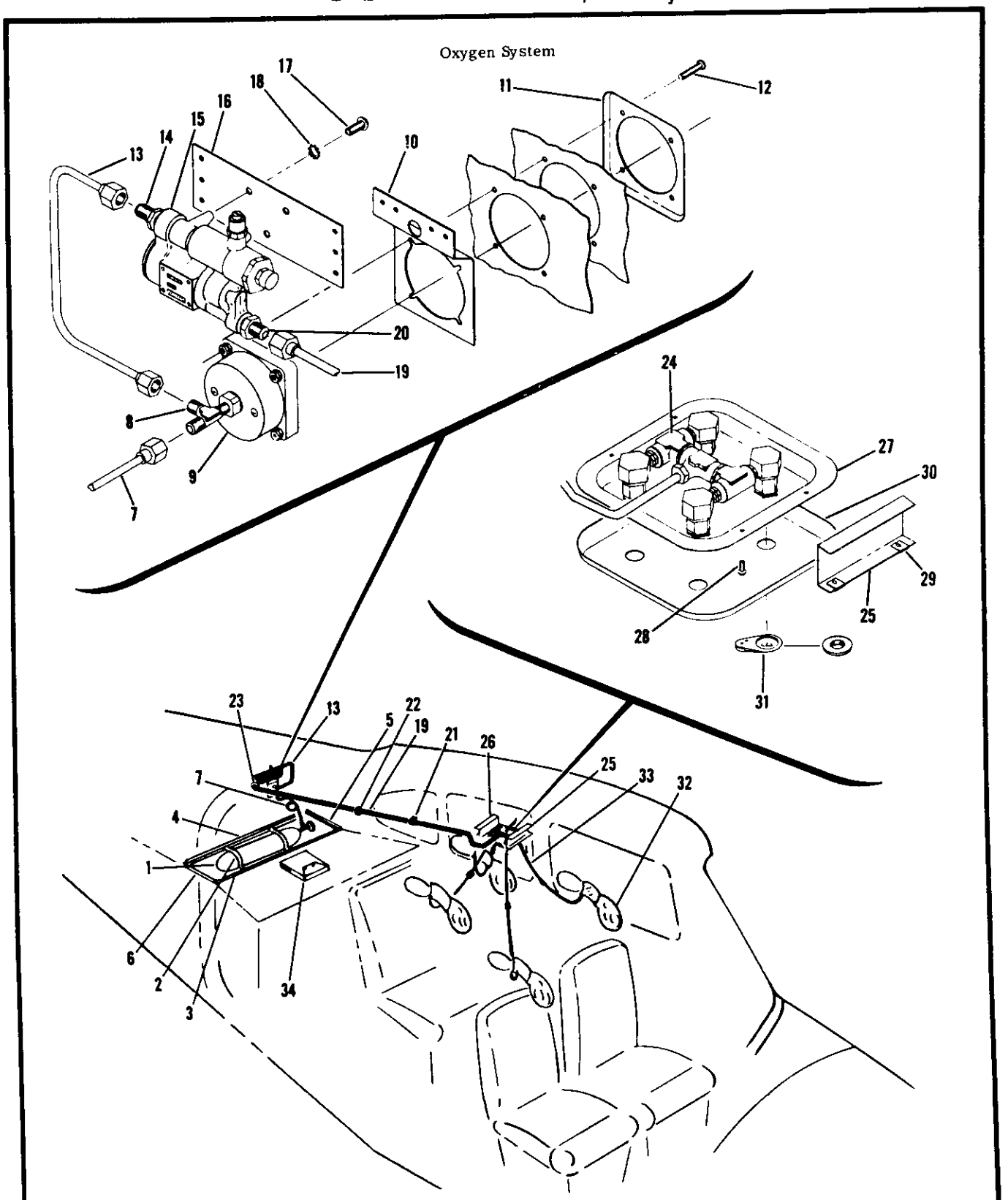

SERIAL 185-0001 THRU 185-0237

Figure 119. Oxygen System Installation

FIGURE AND INDEX NO.	PART NUMBER	DESCRIPTION 1 2 3 4 5 6 7	UNITS PER ASSY	USABLE ON CODE
119 -		OXYGEN SYSTEM INSTALLATION	NP	A
- 1	1200058-1	CYLINDER AND VALVE ASSEMBLY	1	
- 2	1200057-1	MOUNTING BRACKET-CYLINDER	2	
		ATTACHING PARTS		
	AN4-5A	BOLT	2	
	NAS679A4	NUT	2	
		---*---		
- 3	0700030-8	ANGLE-TANK SUPPORT FORWARD	1	
- 4	0700030-9	ANGLE-TANK SUPPORT AFT	1	
- 5	0700030-1	ANGLE-TANK SUPPORT LH	1	
- 6	0700030-2	ANGLE-TANK SUPPORT RH	1	
- 7	0500106-184	TUBE H.P.-TANK TO GAGE	1	
		ATTACHING PARTS		
- 8	MS20826-3D	TEE	1	
		---*---		
- 9	0812362-1	GAGE-OXYGEN PRESSURE WHEN EXHAUSTED USE S-1325N1	1	
	S1325N1	GAGE-OXYGEN PRESSURE WEU C668522-0101	1	
-10	0700030-4	BRACKET-GAGE	1	
-11	0700030-3	BEZEL-GAGE	1	
		ATTACHING PARTS		
-12	AN515B6R	SCREW	4	
		---*---		
-13	0500106-185	TUBE H.P.-GAGE TO REGULATOR	1	
		ATTACHING PARTS		
-14	AN816-3D	NIPPLE	1	
		---*---		
-15	0812363-1	REGULATOR-OXYGEN	1	
-16	0700030-5	BRACKET-REGULATOR	1	
		ATTACHING PARTS		
-17	NAS222-5	SCREW	3	
-18	AN936B416	WASHER	3	
		---*---		
-19	0500106-299	TUBE L.P.-REGULATOR TO MANIFOLD	1	
		ATTACHING PARTS		
-20	AN816-5D	NIPPLE	1	
-21	S1485D5U	CLAMP	1	
	S1021Z8-6	SCREW	1	
	S350	WASHER-CORK	1	
	AN960-10L	WASHER	1	
-22	MS21919DG5	CLAMP	1	
	NAS446-4-3	NUT	1	
	S1021Z8-8	SCREW	1	
		---*---		
-23	MS35489-118	GROMMET	1	
-24	0800030-2	MANIFOLD-OXYGEN	1	
-25	0700030-7	BRACKET-MANIFOLD SUPPORT FORWARD	1	
-26	0700030-6	BRACKET-MANIFOLD SUPPORT AFT	1	
-27	0800030-14	PAN-MANIFOLD SUPPORT	1	
		ATTACHING PARTS		
-28	S1021Z6-6	SCREW	4	
-29	A1804-6Z3	NUT TIN	4	
		---*---		
-30	0800030-5	COVER	1	
-31	0812366-1	DUST COVER	4	
-32	0812369-1	MASK-OXYGEN WHEN EXHAUSTED USE C166009-0203	4	
	C166009-0203	MASK-OXYGEN	4	
-33	0800030-4	LINE ASSEMBLY-MASK	4	
-34	0800030-19	CASE-OXYGEN MASK	1	
		A---SERIAL 185-0001 THRU 185-0237		

Oxygen System

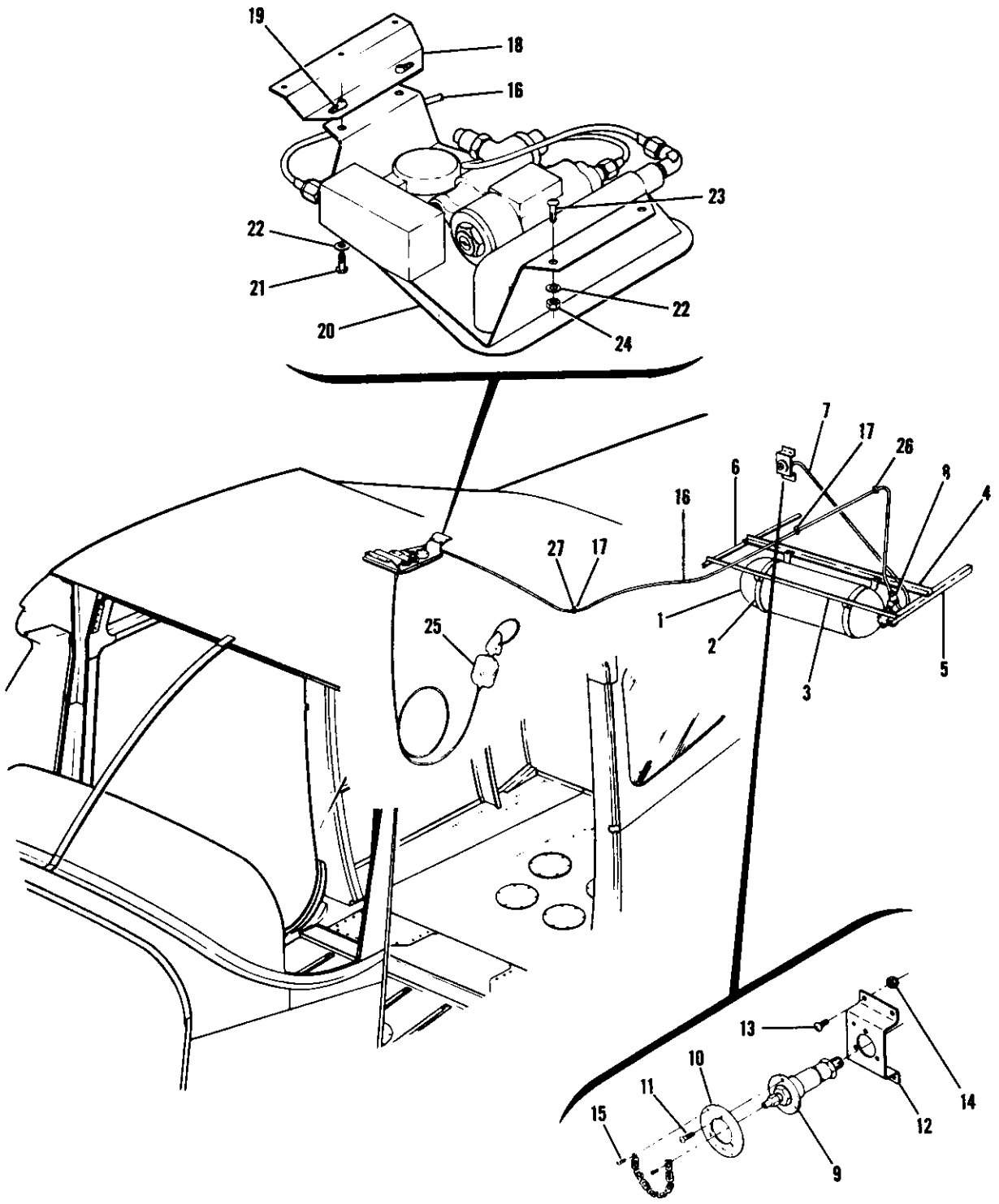

SERIAL 18051184 THRU 18051445
SERIAL 185-0238 THRU 185-0776

Figure 120. Oxygen System Installation

FIGURE AND INDEX NO.	PART NUMBER	DESCRIPTION 1 2 3 4 5 6 7	UNITS PER ASSY	USABLE ON CODE
120 -		OXYGEN SYSTEM INSTALLATION	NP	A
- 1	1200058-1	CYLINDER & VALVE ASSEMBLY	1	
- 2	1200057-1	MOUNTING BRACKET-CYLINDER	1	
		ATTACHING PARTS		
	AN4-5A	BOLT	2	
	NAS679A4	NUT	2	
		---*---		
- 3	0700030-8	ANGLE-TANK SUPPORT FORWARD	1	
- 4	0700030-9	ANGLE-TANK SUPPORT AFT	1	
- 5	0700030-1	ANGLE-TANK SUPPORT LH	1	
- 6	0700030-2	ANGLE-TANK SUPPORT RH	1	
- 7	0800045-24	LINE ASSEMBLY-OXYGEN	1	
- 8	0800045-15	TEE	1	
- 9	0800045-6	FILLER VALVE ASSEMBLY-OXYGEN	1	
-10	1200054-2	RETAINER-UPHOLSTERY	1	
		ATTACHING PARTS		
-11	NAS220-8	SCREW	3	
		---*---		
-12	0700076-2	BRACKET ASSEMBLY-FILLER VALVE SUPPORT	1	B
	0700076-1	BRACKET-FILLER VALVE SUPPORT	1	C
		ATTACHING PARTS		
-13	AN515-8R8	SCREW	4	
-14	NAS679A08	NUT	4	
		---*---		
	NAS680A08	NUTPLATE	3	B
-15	S1021Z4-6	SCREW-FILLER CAP CHAIN	1	
-16	0800045-23	LINE ASSEMBLY-OXYGEN	1	
		ATTACHING PARTS		
-17	MS21919DG3	CLAMP	2	
	S1021Z8-8	SCREW	2	
	NAS446-4-3	NUT	2	
		---*---		
-18	1200052-1	SUPPORT-AUTOMATIC OXYGEN SYSTEM ASSEMBLY	1	
-19	NAS696A3K	NUT-ANCHOR	2	
-20	1200055-1	OXYGEN SYSTEM ASSEMBLY-AUTOMATIC	1	
		ATTACHING PARTS		
-21	AN520-10R7	SCREW	2	
-22	AN960D10	WASHER	4	
-23	NAS221C-6	SCREW	2	
-24	MS21044N3	NUT	2	
		---*---		
-25	1200059-1	MASK ASSEMBLY-OXYGEN	5	
	7	MASK-OXYGEN ZEP	1	
-26	MS35489-11	GROMMET	1	B
-27	0511299-1	BRACKET	1	B

A---SERIAL 185-0238 THRU 185-0776
SERIAL 18051184 THRU 18051445
B---SERIAL 185-0238 THRU 185-0776
C---SERIAL 18051184 THRU 18051445

Oxygen System (Cont)

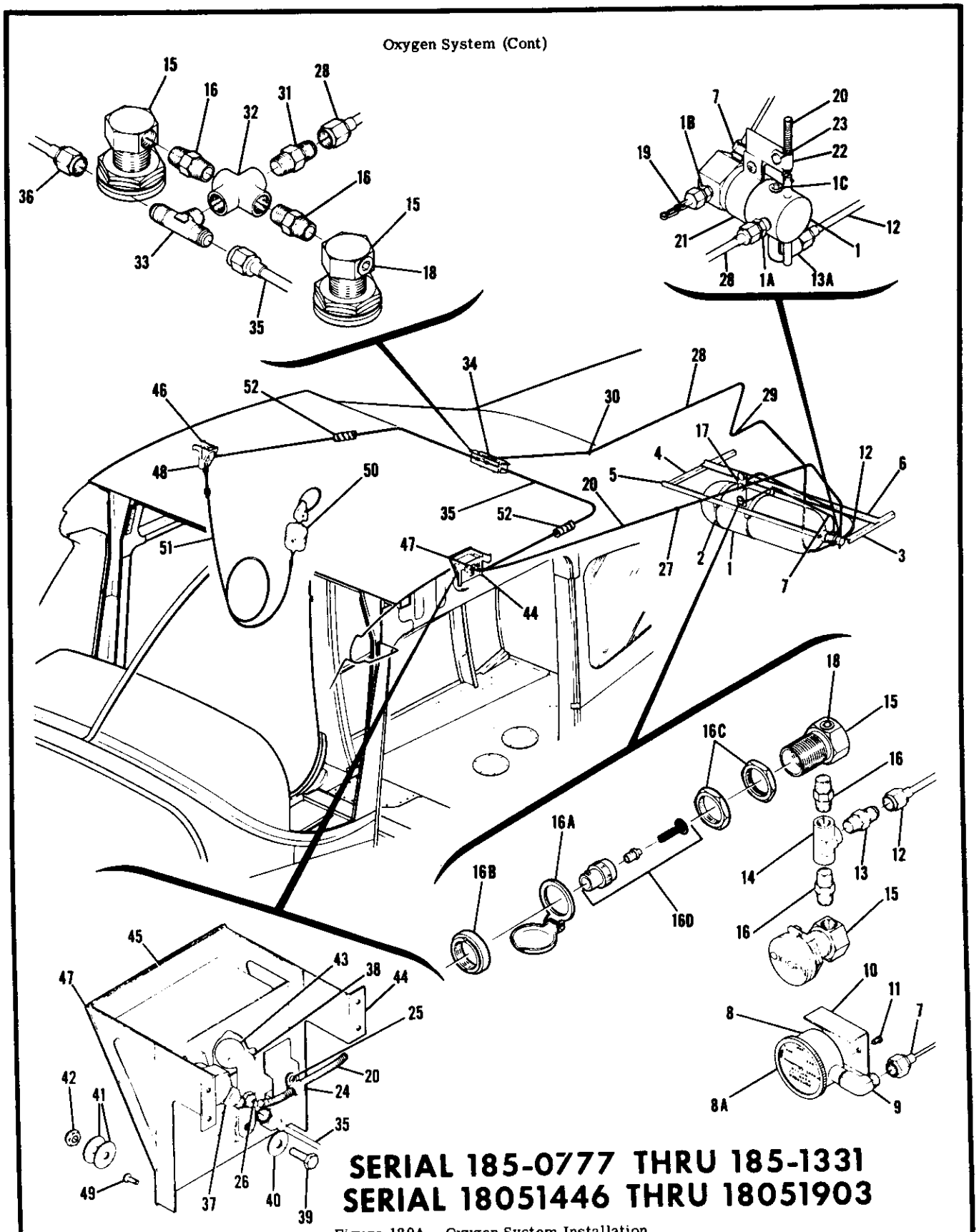

SERIAL 185-0777 THRU 185-1331
SERIAL 18051446 THRU 18051903

Figure 120A. Oxygen System Installation

FIGURE AND INDEX NO.	PART NUMBER	DESCRIPTION 1 2 3 4 5 6 7	UNITS PER ASSY	USABLE ON CODE
120A-		OXYGEN SYSTEM INSTALLATION	NP	A
- 1	C166001-0104	CYLINDER & REGULATOR ASSEMBLY	1	
	C166002-0101	REGULATOR ASSEMBLY	1	
- 1A	C166002-0104	RELIEF VALVE-LOW PRESSURE	1	
- 1B	C166002-0103	RELIEF VALVE-HIGH PRESSURE	1	
- 1C	AN932S2	PLUG	1	
- 2	C166007-0102	BRACKET-MOUNTING	2	
		ATTACHING PARTS		
	AN4-4A	BOLT	2	
	NAS679A4	NUT	2	
		---*---		
- 3	0712014-1	ANGLE-TANK SUPPORT LH	1	
- 4	0712014-2	ANGLE-TANK SUPPORT RH	1	
- 5	0712014-6	ANGLE-TANK SUPPORT FORWARD	1	
- 6	0712014-7	ANGLE-TANK SUPPORT AFT	1	
- 7	C166010-0105	LINE ASSEMBLY-OXYGEN	1	
	C166010-0101	GAGE ASSEMBLY-OXYGEN PRESSURE	1	
- 8	C166010-0102	GAGE	1	
- 8A	C166010-0103	BEZEL	1	
- 9	S1529-1	ELBOW	1	
	0710652-1 ¤	ESCUTCHEON NOT ILLUSTRATED	1	
-10	0710650-2	BRACKET-GAGE	1	
-11	AN515-6R5	SCREW	1	
-12	0700147-7	LINE ASSEMBLY WHEN EXHAUSTED USE 0700147-38	1	
	0700147-38	LINE ASSEMBLY	1	
		ATTACHING PARTS		
-13	AN816-3D	NIPPLE	1	
-13A	MS20822-3D	ELBOW	1	
		---*---		
-14	AN917-1D	TEE	1	
-15	C166006-0101	VALVE ASSEMBLY WHEN EXHAUSTED USE C166006-0104	6	
	C166006-0104	VALVE ASSEMBLY	6	
		ATTACHING PARTS		
-16	AN911-1D	NIPPLE	4	
		---*---		
-16A	Z651-1	COVER ASSEMBLY ZEPA	1	
-16B	Z651-3	LOCK RING ZEPA	1	
-16C	Z651-13	NUT-JAM ZEPA	2	
-16D	C166006-0108	KIT-VALVE	1	
-17	0710650-1	BRACKET-AFT	1	
	1200415-7 ¤	ESCUTCHEON INSTALLED ON OXYGEN PORTS	2	
-18	AN932D2	PLUG	6	
-19	S1526-1	FILLER VALVE ASSEMBLY	1	
	S1520-1	CAP & CHAIN ASSEMBLY	1	
-20	S1489-2	CONTROL-REGULATOR	1	
		ATTACHING PARTS		
-21	1200415-5	CLAMP	1	
	AN520-10R8	SCREW	1	
-22	S1485D5U	CLAMP	1	
-23	S1021Z8-6	SCREW	1	
-24	AN742D5	CLAMP	1	
-25	AN520-10R7	SCREW	1	
-26	0450311-5	CLAMP	1	
	AN960-10	WASHER	AR	
	MS21044N3	NUT	3	
-27	S1592-1A	CLAMP	1	
	S1021Z6-6	SCREW	1	
		---*---		
-28	0700147-6	LINE ASSEMBLY WHEN EXHAUSTED USE 0700147-37	1	
	0700147-37	LINE ASSEMBLY	1	
		ATTACHING PARTS		
-29	S1592-1A	CLAMP	1	
	S1021Z6-6	SCREW	1	
-30	S1486DG5U	CLAMP	1	
	S1021Z8-10	SCREW	1	
-31	AN816-3D	NIPPLE	1	
		---*---		
-32	AN918-1D	CROSS	1	
-33	MS20825-6D	TEE	1	
-34	0710648-1	BRACKET-CENTER	1	
	1200415-7 ¤	ESCUTCHEON INSTALLED ON OXYGEN PORTS	2	

CONTINUED ON NEXT PAGE

FIGURE AND INDEX NO.	PART NUMBER	DESCRIPTION 1 2 3 4 5 6 7	UNITS PER ASSY	USABLE ON CODE
120A-35	0700147-4	LINE ASSEMBLY-PILOT OUTLET WHEN EXHAUSTED USE 0700147-35	1	
	0700147-35	LINE ASSEMBLY-PILOT OUTLET	1	
-36	0700147-5	LINE ASSEMBLY-COPILOT OUTLET WHEN EXHAUSTED USE 0700147-36	1	
	0700147-36	LINE ASSEMBLY-COPILOT OUTLET	1	
		ATTACHING PARTS		
-37	AN816-3D	NIPPLE	1	
		---*---		
-38	0710642-1	ARM-OXYGEN CONTROL	1	
		ATTACHING PARTS		
-39	AN3-5A	BOLT	1	
-40	AN970-3	WASHER	2	
-41	S1438-2	WASHER	2	
-42	MS21044N3	NUT	1	
		---*---		
-43	S1249-1	KNOB-CONTROL ARM	1	
		ATTACHING PARTS		
	AN507-1032R14	SCREW	1	
		---*---		
-44	0710641-1	BRACKET-LH FORWARD	1	
-45	0710644-1	ANGLE-LH FORWARD	1	
-46	0710643-1	BRACKET-RH FORWARD	1	
	0710645-1	ANGLE-RH FORWARD	1	
-47	0710646-1 ¤	COVER-PLATE LH	1	
-48	0710647-1 ¤	COVER-PLATE RH	1	
		ATTACHING PARTS		
-49	S1021Z6-6	SCREW	4	
		---*---		
	C166005-0101	MASK ASSEMBLY WHEN EXHAUSTED USE C166005-0501	5	B
	C166005-0501	MASK & LINE ASSEMBLY	5	C
-50	C166009-0501 *	MASK ASSEMBLY	1	
-51	C166005-0504 *	LINE & FITTING ASSEMBLY 8,000-14,000 FT	1	
	C166005-0102	MASK ASSEMBLY-PILOT WHEN EXHAUSTED USE C166005-0502	1	B
	C166005-0502	MASK & LINE ASSEMBLY-PILOT	1	C
	C166009-0501 *	MASK ASSEMBLY	1	
	C166005-0505 *	LINE & FITTING ASSEMBLY 14,000-22,000 FT	1	
-52	S1399-1	SLEEVE-8.00 IN LG BULK ITEM REF S1399-1-8.00	2	

NOTE. ¤THIS PART NUMBER MUST HAVE A SECOND DASH NUMBER ADDED TO DENOTE COLOR. REFER TO HOW TO ORDER INTERIOR PARTS-PAGE XIII.

NOTE. *THESE PARTS ARE APPLICABLE TO THE SUPPORT OF C166005-0501 & C166005-0502 ONLY.

A---SERIAL 18051446 THRU 18051903
SERIAL 185-0777 THRU 185-1331
B---SERIAL 18051446 THRU 18051637
SERIAL 185-0777 THRU 185-0984
C---SERIAL 18051638 THRU 18051903
SERIAL 185-0985 THRU 185-1331

FIGURE AND INDEX NO.	PART NUMBER	DESCRIPTION 1 2 3 4 5 6 7	UNITS PER ASSY	USABLE ON CODE
1208-		OXYGEN SYSTEM INSTALLATION	NP	A
- 1	C166006-0101	VALVE ASSEMBLY WHEN EXHAUSTED USE C166006-0104	6	
	C166006-0104	VALVE ASSEMBLY	6	
		ATTACHING PARTS		
- 2	AN911-1D	NIPPLE	4	
		---*---		
- 3	Z651-13	NUT-JAM ZEPA	2	
- 4	C166006-0108	KIT-VALVE REPAIR	1	
- 5	Z651-1	COVER ASSEMBLY ZEPA	1	
- 6	Z651-3	LOCK RING ZEPA	1	
- 7	AN932D2	PLUG	6	
- 8	1200415-7	ESCUTCHEON	2	
- 9	0710648-1	BRACKET-CENTER	1	
-10	AN918-1D	CROSS	1	
-11	MS20825-6D	TEE	1	
-12	0700147-4	TUBE ASSEMBLY-PILOT OUTLET WHEN EXHAUSTED USE 0700147-35-	1	B
	0700147-35	TUBE ASSEMBLY-PILOT OUTLET	1	C
-13	0700147-5	TUBE ASSEMBLY-COPILOT OUTLET WHEN EXHAUSTED USE 0700147-36-	1	B
	0700147-36	TUBE ASSEMBLY-COPILOT OUTLET	1	C
		ATTACHING PARTS		
-14	AN816-3D	NIPPLE	1	
		---*---		
-15	S1399-1	SLEEVE-8.00 IN LG BULK ITEM REF S1399-1-8.00	2	
-16	C166001-0104	CYLINDER & REGULATOR ASSEMBLY	1	
	C166002-0101	REGULATOR ASSEMBLY	1	
-17	C166002-0103	RELIEF VALVE-HIGH PRESSURE	1	
-18	C166002-0104	RELIEF VALVE-LOW PRESSURE	1	
-19	AN932-S2	PLUG	1	
-20	ZF604	ADAPTOR ZEPA	1	
-21	0700147-6	TUBE ASSEMBLY WHEN EXHAUSTED USE 0700147-37	1	B
	0700147-37	TUBE ASSEMBLY	1	C
		ATTACHING PARTS		
-22	AN816-3B	NIPPLE	1	
	S1486DG5U	CLAMP	1	
	S1021Z8-10	SCREW	1	
	S1592-1A	CLAMP	1	
	S1021Z6-6	SCREW	1	
		---*---		
-23	0700147-7	TUBE ASSEMBLY WHEN EXHAUSTED USE 0700147-38	1	B
	0700147-38	TUBE ASSEMBLY	1	C
		ATTACHING PARTS		
-24	AN816-3D	NIPPLE	2	
		---*---		
-25	AN917-1D	TEE	1	
-26	S1489-2	CONTROL-OXYGEN	1	
		ATTACHING PARTS		
-27	1200415-5	CLAMP	1	
-28	AN520-10R8	SCREW	1	
	MS21044N3	NUT	1	
-29	S1485D5U	CLAMP	1	
	S1021Z8-6	SCREW	1	
-30	AN742D5	CLAMP	1	
	AN520-10R8	SCREW	1	
	MS21044N3	NUT	1	
-31	0450311-5	CLAMP	1	
	AN960-10	WASHER	AR	
-32	MS21044N3	NUT	1	
-33	S1592-1A	CLAMP	1	
	S1021Z6-6	SCREW	1	
		---*---		
-34	0710642-1	ARM-OXYGEN CONTROL	1	
		ATTACHING PARTS		
-35	AN3-5A	BOLT	1	
-36	AN970-3	WASHER	2	
-37	S1438-2	WASHER	2	
-38	MS21044N3	NUT	1	
		---*---		
-39	S1249-1	KNOB	1	
		ATTACHING PARTS		
	AN507-1032R14	SCREW	1	
		---*---		
-40	0710641-1	BRACKET-LH FORWARD OXYGEN OUTLET	1	
-41	0710644-1	ANGLE-LH FORWARD	1	
-42	0710643-1	BRACKET-RH FORWARD OXYGEN OUTLET	1	
-43	0710645-1	ANGLE-RH FORWARD	1	

CONTINUED ON NEXT PAGE

Oxygen System (Cont)

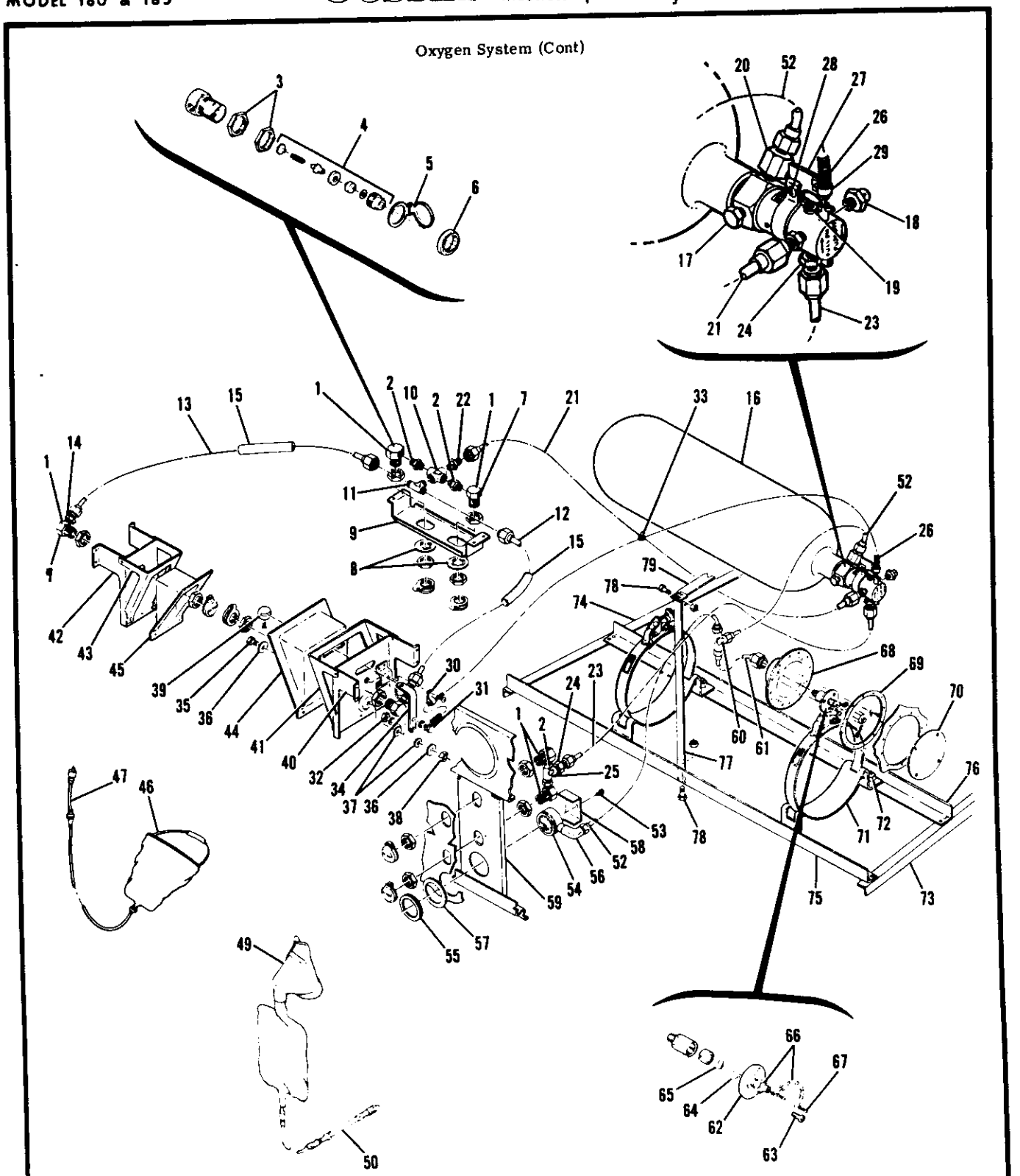

SERIAL 18051904 THRU 18052103
SERIAL 185-1332 THRU 185-1599

Figure 120B. Oxygen System Installation

FIGURE AND INDEX NO.	PART NUMBER	DESCRIPTION 1 2 3 4 5 6 7	UNITS PER ASSY	USABLE ON CODE
1208-44	0710646-1 ¤	COVER PLATE-LH	1	
-45	0710647-1 ¤	COVER PLATE-RH	1	
		ATTACHING PARTS		
	S1021Z6-6	SCREW	4	
		---*---		
	C166005-0501	MASK & LINE ASSEMBLY-PASSENGER	5	D
	C166005-0204	MASK & LINE ASSEMBLY-PASSENGER	5	E
-46	C166005-0205	MASK ASSEMBLY	1	E
	C166009-0501	MASK ASSEMBLY	1	D
-47	C166005-0504	LINE & FITTING ASSEMBLY 8,000-14,000 FT	1	
-48		DELETED		
	C166005-0502	MASK & LINE ASSEMBLY-PILOT	1	
-49	C166009-0501	MASK ASSEMBLY	1	
-50	C166005-0505	LINE & FITTING ASSEMBLY 14,000-22,000 FT	1	
-51		DELETED		
-52	C166010-0105	LINE ASSEMBLY-OXYGEN	2	
	C166010-0101	GAGE ASSEMBLY-OXYGEN PRESSURE	1	
		ATTACHING PARTS		
-53	AN515-6R5	SCREW	1	
		---*---		
-54	C166010-0102	GAGE	1	
-55	C166010-0103	BEZEL	1	
-56	S1529-1	ELBOW	1	
-57	0710652-1 ¤	ESCUTCHEON	1	
-58	0710650-2	BRACKET-GAGE	1	
-59	0710650-1	BRACKET-AFT	1	
-60	S1724-1	TEE	1	
-61	S1721-12	LINE ASSEMBLY-OXYGEN TEE TO FILLER	1	
-62	C166008-0101	VALVE ASSEMBLY-OXYGEN FILLER	1	
		ATTACHING PARTS		
-63	AN515-8R8	SCREW	3	
		---*---		
-64	2-15	O RING PKSC	1	
-65	2-11	O RING PKSC	1	
-66	S1520-1	CAP & CHAIN ASSEMBLY	1	
-67	S1021Z4-6	SCREW	1	
-68	1200429-15	VALVE ADAPTOR ASSEMBLY	1	
	NAS697A08	NUTPLATE	3	
	NAS697A06L	NUTPLATE	4	
-69	1200429-13	SPACER	1	
-70	1200429-12	COVER-VALVE	1	
		ATTACHING PARTS		
	AN515-6R6	SCREW	4	
		---*---		
-71	C166007-0102	MOUNTING BRACKET-OXYGEN BOTTLE	2	
		ATTACHING PARTS		
-72	AN4-4A	BOLT	2	
	NAS679A4	NUT	2	
		---*---		
-73	0712014-1	ANGLE-TANK SUPPORT LH	1	
-74	0712014-2	ANGLE-TANK SUPPORT RH	1	
-75	0712014-6	ANGLE-TANK SUPPORT FORWARD	1	
-76	0712014-7	ANGLE-TANK SUPPORT AFT	1	
-77	0713916-1	SUPPORT	1	
		ATTACHING PARTS		
-78	AN3-3A	BOLT	2	
	MS21044N3	NUT	2	
		---*---		
-79	0712007-4	STIFFENER	1	

NOTE. ¤THIS PART NUMBER MUST HAVE A SECOND DASH NUMBER ADDED TO DENOTE COLOR. REFER TO HOW TO ORDER INTERIOR PARTS-PAGE XIII.

A---SERIAL 18051904 THRU 18052103
SERIAL 185-1332 THRU 185-1599
B---SERIAL 18051904 THRU 18052076
SERIAL 185-1332 THRU 185-1539
C---SERIAL 18052077 THRU 18052103
SERIAL 185-1540 THRU 185-1599
D---SERIAL 18051904 THRU 18051946
SERIAL 185-1332 THRU 185-1392
E---SERIAL 18051947 THRU 18052103
SERIAL 185-1393 THRU 185-1599

Oxygen System (Cont)

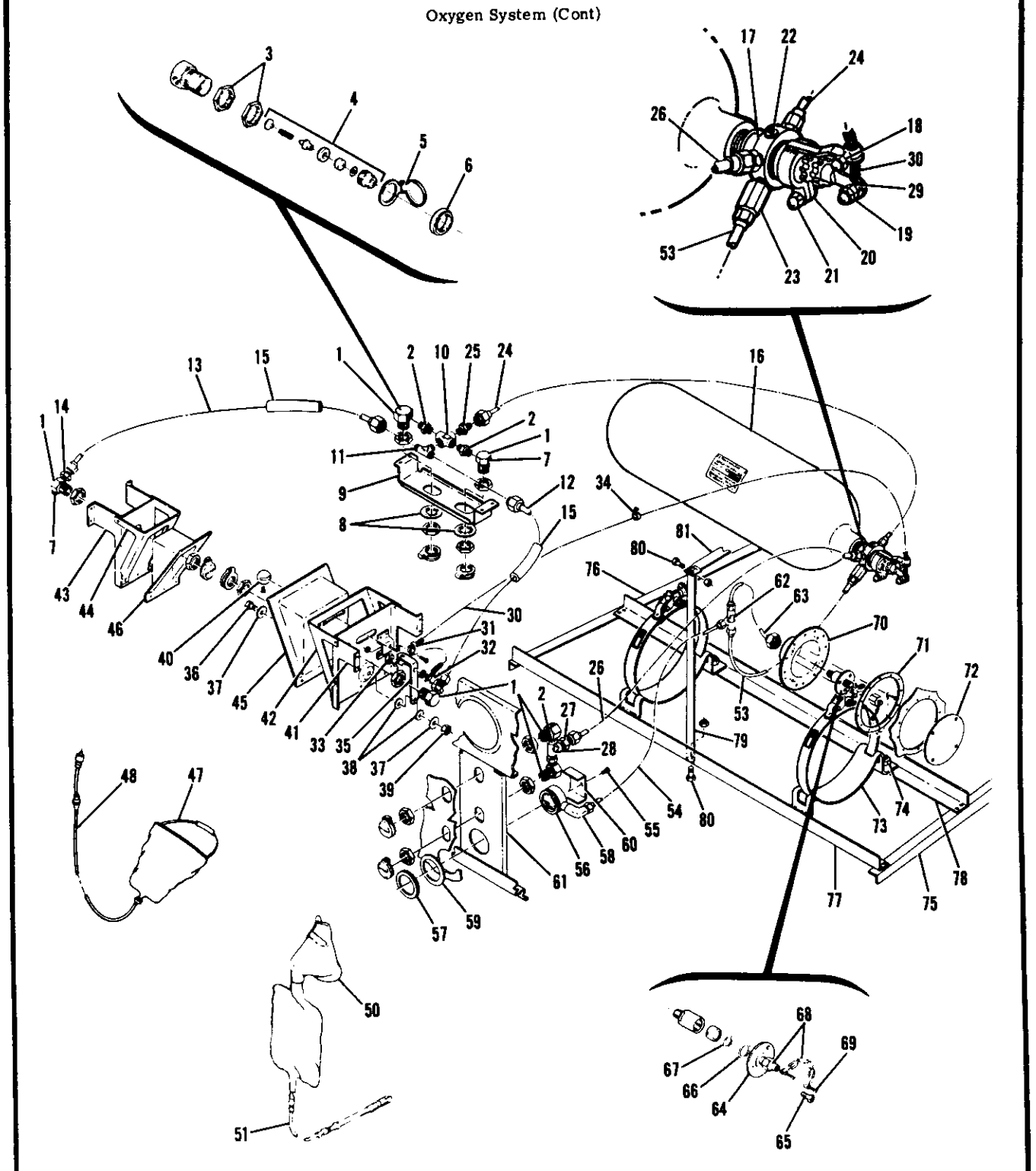

SERIAL 18052104 THRU 18052384
SERIAL 18501600 THRU 18502310

Figure 120C. Oxygen System Installation

FIGURE AND INDEX NO.	PART NUMBER	DESCRIPTION 1 2 3 4 5 6 7	UNITS PER ASSY	USABLE ON CODE
120C-		OXYGEN SYSTEM INSTALLATION	NP	A
- 1	C166006-0104	VALVE ASSEMBLY-OXYGEN OUTLET	6	B
	C166006-0109	VALVE ASSEMBLY-OXYGEN OUTLET	6	C
		ATTACHING PARTS		
- 2	AN911-1D	NIPPLE	4	
		---*---		
- 3	Z651-13	NUT-JAM ZEPA	2	
- 4	C166006-0108	KIT-VALVE REPAIR	1	
- 5	Z651-1	COVER ASSEMBLY ZEPA	1	
- 6	Z651-3	LOCK RING ZEPA	1	
- 7	AN932C2	PLUG	6	
- 8	1200415-7	ESCUTCHEON	2	
- 9	0710648-1	BRACKET-CENTER	1	
-10	AN918-1D	CROSS	1	
-11	MS20825-6D	TEE	1	
-12	0700147-35	TUBE ASSEMBLY-PILOT OUTLET	1	
-13	0700147-36	TUBE ASSEMBLY-COPILOT OUTLET	1	
		ATTACHING PARTS		
-14	AN816-3D	NIPPLE	1	
		---*---		
-15	S1399-1	SLEEVE-8.00 IN LG BULK ITEM REF S1399-1-8.00	2	
-16	C166001-0601	CYLINDER & REGULATOR ASSEMBLY	1	
-17	C166002-0401	REGULATOR ASSEMBLY	1	
-18	10-8001C	NUT ZEPA	1	
	16-8500C	SETSCREW ZEPA	1	
-19	10-8001C	NUT ZEPA	1	
	16-8375C	SET SCREW ZEPA	1	
-20	91-8000AC	CLAMP ZEPA	1	
		ATTACHING PARTS		
-21	16-2000C	BOLT ZEPA	1	
	97NT3-048	NUT ZEPA	1	
		---*---		
-22	12-4862	PLUG-SAFETY ZEPA	1	
	AN932C2	PLUG	1	
-23	ZF604	ADAPTOR ASSEMBLY	1	
-24	0700147-54	TUBE ASSEMBLY	1	
		ATTACHING PARTS		
-25	AN816-3B	NIPPLE	1	
	S1486DG5U	CLAMP	1	
	S1021Z8-10	SCREW	1	
	S1592-1A	CLAMP	1	
	S1021Z6-6	SCREW	1	
		---*---		
-26	0700147-55	TUBE ASSEMBLY	1	
		ATTACHING PARTS		
-27	AN816-3D	NIPPLE	1	
		---*---		
-28	AN917-1D	TEE	1	
-29	S1398-1	WIRE-86.00 IN LG BULK ITEM REF S1398-1-86.00	1	
-30	S1398-2	CASING-80.00 IN LG BULK ITEM REF S1398-2-80.00	1	
		ATTACHING PARTS		
-31	AN742D5	CLAMP	1	
	AN520-10R8	SCREW	1	
	MS21044N3	NUT	1	
-32	0450311-5	CLAMP	1	
	AN960-10	WASHER	AR	
-33	MS21044N3	NUT	1	
-34	S1592-1A	CLAMP	1	
	S1021Z6-6	SCREW	1	
		---*---		
-35	0710642-2	ARM-OXYGEN CONTROL	1	
		ATTACHING PARTS		
-36	AN3-5A	BOLT	1	
-37	AN970-3	WASHER	2	
-38	S1438-2	WASHER	2	
-39	MS21044N3	NUT	1	
		---*---		
-40	S1249-1	KNOB	1	
		ATTACHING PARTS		
	AN507-1032R14	SCREW	4	
		---*---		
-41	0710641-1	BRACKET-LH FORWARD OXYGEN OUTLET	1	
-42	0710644-1	ANGLE-LH FORWARD	1	
-43	0710643-1	BRACKET-RH FORWARD OXYGEN OUTLET	1	
-44	0710645-1	ANGLE-RH FORWARD	1	

CONTINUED ON NEXT PAGE

FIGURE AND INDEX NO.	PART NUMBER	DESCRIPTION 1 2 3 4 5 6 7	UNITS PER ASSY	USABLE ON CODE
120C-45	0710646-1 ¤	COVER PLATE-LH	1	
-46	0710647-1 ¤	COVER PLATE-RH	1	
		ATTACHING PARTS		
	S1021Z6-6	SCREW	4	
		---*---		
	C166005-0204	MASK & LINE ASSEMBLY-PASSENGER	5	
-47	C166005-0205	MASK ASSEMBLY	1	
-48	C166005-0504	LINE & FITTING ASSEMBLY 8,000-14,000 FT	1	
-49		DELETED		
	C166005-0202	MASK & LINE ASSEMBLY-PILOT	1	
-50	C166005-0205	MASK ASSEMBLY	1	
-51	C166005-0505	LINE & FITTING ASSEMBLY 14,000-22,000 FT	1	
-52		DELETED		
-53	0700147-56	LINE ASSEMBLY-OXYGEN REGULATOR TO TEE	1	D
	S1723-5	LINE ASSEMBLY-OXYGEN REGULATOR TO TEE	1	E
-54	C166010-0105	LINE ASSEMBLY-OXYGEN TEE TO GAGE	1	D
	S1722-15	LINE ASSEMBLY-OXYGEN TEE TO GAGE	1	E
	C166010-0101	GAGE ASSEMBLY-OXYGEN PRESSURE	1	
		ATTACHING PARTS		
-55	AN515-6R5	SCREW	1	
		---*---		
-56	C166010-0102	GAGE	1	
-57	C166010-0103	BEZEL	1	
-58	S1529-1	ELBOW	1	
-59	0710652-1 ¤	ESCUTCHEON	1	
-60	0710650-1	BRACKET-GAGE	1	
-61	0710650-1	BRACKET-AFT	1	
-62	S1724-1	TEE	1	D
-63	S1721-12	LINE ASSEMBLY-OXYGEN TEE TO FILLER VALVE	1	E
	S1721-16	LINE ASSEMBLY-OXYGEN TEE TO FILLER VALVE	1	
-64	C166008-0101	VALVE ASSEMBLY-OXYGEN FILLER		
		ATTACHING PARTS	3	
-65	AN515-8R8	SCREW		
		---*---	1	
-66	2-15	O RING PKSC	1	
-67	2-11	O RING PKSC	1	
-68	S1520-1	CAP & CHAIN ASSEMBLY	1	
-69	S1021Z4-6	SCREW	1	
-70	1200429-15	VALVE ADAPTOR ASSEMBLY	3	
	NAS697A08	NUTPLATE	4	
	NAS697A06L	NUTPLATE	1	
-71	1200429-13	SPACER	1	
-72	1200429-12	COVER-VALVE		
		ATTACHING PARTS	4	
	AN515-6R6	SCREW		
		---*---	2	
-73	C166007-0102	MOUNTING BRACKET-OXYGEN BOTTLE		
		ATTACHING PARTS	2	
-74	AN4-4A	BOLT	2	
	NAS679A4	NUT		
		---*---	1	
-75	0712014-1	ANGLE-TANK SUPPORT LH	1	
-76	0712014-2	ANGLE-TANK SUPPORT RH NOT USED WITH LITTER DOOR	1	E
	0712014-10	ANGLE-TANK SUPPORT RH USED WITH LITTER DOOR	1	
-77	0712014-6	ANGLE-TANK SUPPORT FWD NOT USED WITH LITTER DOOR	1	E
	0712014-8	ANGLE-TANK SUPPORT FWD USED WITH LITTER DOOR	1	
-78	0712014-7	ANGLE-TANK SUPPORT AFT NOT USED WITH LITTER DOOR	1	E
	0712014-9	ANGLE-TANK SUPPORT AFT USED WITH LITTER DOOR		

CONTINUED ON NEXT PAGE

FIGURE AND INDEX NO.	PART NUMBER	DESCRIPTION 1 2 3 4 5 6 7	UNITS PER ASSY	USABLE ON CODE
120C-79	0713916-1	SUPPORT NOT USED WITH LITTER DOOR ----------	1	
	0713916-5	SUPPORT USED WITH LITTER DOOR ----------	1	
		ATTACHING PARTS		
-80	AN3-3A	BOLT ----------	2	
	MS21044N3	NUT ----------	2	
		---*---		
-81	0712007-4	STIFFENER ----------	1	
		NOTE. *THIS PART NUMBER MUST HAVE A SECOND DASH NUMBER ADDED TO DENOTE COLOR. REFER TO HOW TO ORDER INTERIOR PARTS-PAGE XIII.		
		A---SERIAL 18052104 THRU 18052384		
		SERIAL 18501600 THRU 18502310		
		B---SERIAL 18052104 THRU 18052110		
		SERIAL 18501600 THRU 18501621		
		C---SERIAL 18052111 THRU 18052384		
		SERIAL 18501622 THRU 18502310		
		D---SERIAL 18052104 THRU 18052293		
		SERIAL 18501600 THRU 18502100		
		E---SERIAL 18052294 THRU 18052384		
		SERIAL 18502101 THRU 18502310		

Electrical Equipment

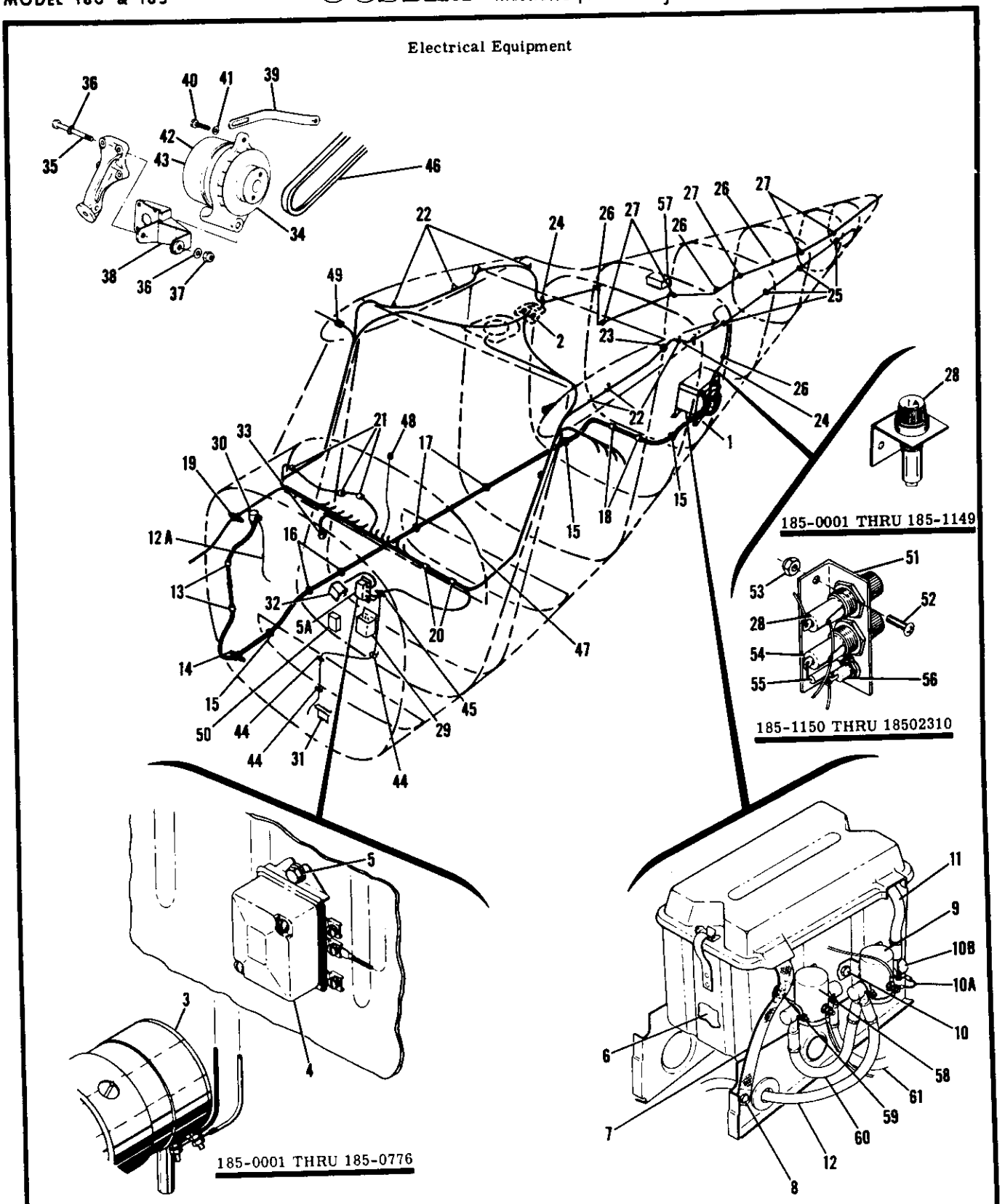

SERIAL 185-0001 THRU 18502310

Figure 121. Fuselage Electrical Equipment Installation

FIGURE AND INDEX NO.	PART NUMBER	DESCRIPTION 1 2 3 4 5 6 7	UNITS PER ASSY	USABLE ON CODE
121 -		ELECTRICAL EQUIPMENT INSTALLATION	NP	A
- 1		GROUND SERVICE PLUG INSTL SEE FIG 125, 125A & 125B	1	
- 2	SEE FIG 123	CABIN LIGHTS INSTALLATION	1	
		50 AMP GENERATOR INSTALLATION	1	C
	PDM50	CIRCUIT BREAKER SPT	1	
		ATTACHING PARTS		
	AN507-632R12	SCREW	2	
		---*---		
- 3	0750140-5	GENERATOR-50 AMP	1	
- 4	0413205-11	REGULATOR-VOLTAGE 50 AMP	1	
		ATTACHING PARTS		
- 5	AN4-6A	BOLT	3	
		---*---		
	627377	PULLEY-V BELT CM	1	
- 5A	0750216-1	REGULATOR-VOLTAGE USED WITH ALTERNATOR	1	H
		WHEN EXHAUSTED USE C611001-0101		
	C611001-0101	REGULATOR-VOLTAGE USED WITH ALTERNATOR	1	J
		WEU C611001-0102		
	C611001-0102	REGULATOR-VOLTAGE USED WITH ALTERNATOR	1	J
		ATTACHING PARTS		
	AN4-6A	BOLT	2	H
	AN520-416R8	SCREW	2	J
		---*---		
	C5FF10A568A	PLUG ASSEMBLY FOR	1	H
	1250211-4	PLUG ASSEMBLY	1	J
- 6	0712605-201 *	BATTERY-AIRCRAFT	1	
- 7	0412007-1	STRAP-BATTERY GROUND	1	
		ATTACHING PARTS		
- 8	AN4-4A	BOLT	1	
	AN960-416	WASHER	1	
		---*---		
- 9	0712603-2	CONTACTOR ASSEMBLY-MASTER SOLENOID	1	G
	S1579-1	CONTACTOR-MASTER SOLENOID WEU S1579-2	1	W
	S1579-2	CONTACTOR-MASTER SOLENOID	1	X
		ATTACHING PARTS		
-10	AN3-3A	BOLT	2	
	MS21044N3	NUT	2	
		---*---		
	0770657-1	DIODE ASSEMBLY	1	G
-10A	0770728-1	DIODE ASSEMBLY	1	F
-10B	S1807-1	COVER-CONTACTOR TERMINAL	2	S
	S2209-2	STA-STRAP	2	S
-11	0700092-PA1	CABLE BATTERY TO BATTERY SOLENOID	1	G
	0700092-PA6	CABLE-BATTERY TO SOLENOID	1	F
-12	0700092-PA4	CABLE BATTERY SOLENOID TO STARTER SOLENOID	1	G
	0700092-PA8	CABLE-BATTERY SOLENOID TO STARTER SOLENOID	1	F
-12A	0700092-KA2	CABLE-STARTER CONTACTOR TO STARTER	2	
	MS25171-3S	NIPPLE	2	
	SEE FIG 124	ROTATING BEACON INSTALLATION	1	L
	SEE FIG 124A	FLASHING BEACON INSTALLATION	1	M
-13	MS21919DG7	CLAMP	4	
		ATTACHING PARTS		
	NAS446-4-3	NUT	1	
	S1021Z8-8	SCREW	1	
		---*---		
-14	NAS557-8A	GROMMET	1	
	0713003-74	FAIRLEAD	1	
	S1095-4	SHIELD-HALF	2	
		ATTACHING PARTS		
	S1021Z8-8	SCREW	1	
	NAS446-4-3	NUT	1	
		---*---		
-15	MS35489-19	GROMMET	3	
-16	MS35489-48	GROMMET	2	
-17	MS35489-17	GROMMET	2	
-18	S1486DG7U	CLAMP	2	
		ATTACHING PARTS		
	S1021Z8-8	SCREW	1	
		---*---		

CONTINUED ON NEXT PAGE

FIGURE AND INDEX NO.	PART NUMBER	DESCRIPTION 1 2 3 4 5 6 7	UNITS PER ASSY	USABLE ON CODE
121 -19	NAS557-6A	GROMMET	1	
	S1095-3	SHIELD-HALF	2	
		ATTACHING PARTS		
	S1021Z8-8	SCREW	1	
	NAS446-4-3	NUT	1	
-20	S1592-3B	HARNESS BAND UC	2	
		ATTACHING PARTS		
	S1021Z6-8	SCREW	1	
		---*---		
-21	S1486DG5U	CLAMP	3	
		ATTACHING PARTS		
	S1021Z8-8	SCREW	1	
		---*---		
-22	CM2679-2	STRAP	6	
		ATTACHING PARTS		
	S1021Z8-8	SCREW	1	
	NAS446-4-3	NUT	1	
		---*---		
-23	S1155-4	CLAMP	1	
		ATTACHING PARTS		
	S1021Z8-8	SCREW	1	
	NAS446-4-3	NUT	1	
		---*---		
-24	1270015-1	STRAP ASSEMBLY	2	
		ATTACHING PARTS		
	S1021Z6-8	SCREW	2	
	NAS446-2-3	NUT	2	
		---*---		
-25	MS35489-118	GROMMET	4	
-26	A3493-012-1	CLIP TIN	3	
-27	MS35489-4	GROMMET	5	
-28	S1090-22	FUSE HOLDER-ELECTRIC CLOCK	1	
	S1091-1	FUSE-1 AMP	1	
-29	0713130-1	VIBRATOR-STARTING	1	B
		ATTACHING PARTS		
	AN520-10R8	SCREW	2	B
		---*---		
-30	0750027-1	CONTACTOR-STARTER	1	L
	S1673-1	CONTACTOR-STARTER WHEN EXHAUSTED USE S1991-1	1	T
	S1991-1	CONTACTOR-STARTER	1	U
		ATTACHING PARTS		
	AN4-4A	BOLT	2	
	AN960-416	WASHER	2	
		---*---		
	MS25171-3S	NIPPLE-TERMINAL COVER	2	R
	S1807-1	COVER-CONTACTOR TERMINAL	1	S
	S1807-2	COVER-CONTACTOR TERMINAL BATTERY CABLE	1	S
	S2209-2	STA-STRAP	2	S
-31	SEE FIG 108	RESISTOR-FUEL PUMP	1	
	MS25253-1	SWITCH-THROTTLE SEE FIG 104 & 105	1	G
	S1931-1	ACTUATOR-THROTTLE SEE FIG 104 & 105	1	G
	E33-10K	SWITCH & ACTUATOR ASSY-THROTTLE SEE FIG 104 & 105	1	Z
-32	0770038-2	FILTER	1	D
		ATTACHING PARTS		
	AN515-10R6	SCREW	2	D
		---*---		
-33	S550B	SUPPRESSOR SATA	1	L
	SEE FIG 123B	ALTERNATOR INSTALLATION-SHOCK MOUNTED SEE FIGURE 123B	1	P
		ALTERNATOR INSTALLATION	1	K
-34	0750217-1	ALTERNATOR ASSEMBLY-52 AMP WHEN EXHAUSTED SEE SERVICE LETTER 66-1 FOR CONVERTING TO 60 AMP ALTERNATOR	1	E
	C611501-0102	ALTERNATOR ASSEMBLY-60 AMP	1	N
		ATTACHING PARTS		
-35	AN7-40A	BOLT	1	
-36	AN960-716	WASHER	2	
-37	MS20365-720C	NUT	1	
-38	0750213-1	SUPPORT ASSEMBLY	1	
		---*---		
-39	0750221-1	ARM-ADJUSTING	1	
		ATTACHING PARTS		
-40	0750220-1	BOLT	1	
-41	S1450-6-14-080	WASHER	1	
		---*---		

CONTINUED ON NEXT PAGE

FIGURE AND INDEX NO.	PART NUMBER	DESCRIPTION 1 2 3 4 5 6 7	UNITS PER ASSY	USABLE ON CODE
121 -42	0770038-2	NOISE FILTER	1	E
		ATTACHING PARTS		
	AN515-8R6	SCREW	2	
	NAS679A08	NUT	2	
		---*---		
-43	1250208-1	STRAP-FILTER MOUNT	1	E
		ATTACHING PARTS		
	AN520-10R5	SCREW	2	
	1250207-1	SPACER	2	
	AN936A10	WASHER	2	
		---*---		
-44	MS21919DG2	CLAMP	3	
-45	NAS557-12A	GROMMET	1	
	S1095-6	SHIELD HALF	2	
		ATTACHING PARTS		
	S1021Z8-8	SCREW	2	
	NAS446-4-3	NUT	2	
		---*---		
-46	S1597-1-30.8	BELT-ALTERNATOR DRIVE	1	F
	S1597-1-31.2	BELT-ALTERNATOR DRIVE	1	E
-47		INSTRUMENT PANEL ELECTRICAL COMPONENTS FOR SWITCHES	1	
		CIRCUIT BREAKERS-DIODE BOARD-BUS BAR RELAY-ELECTRIC		
		CLOCK-WARNING HORN SEE FIGURES 68, 68A, 68B, 68C&68D		
-48	S1637-2	HOUSING COMPASS DISCONNECT	2	M
	S1367-1	HOUSING COMPASS DISCONNECT	2	M
-49	S1638-1	HOUSING RH ROOT RIB DISCONNECT	1	M
	S1638-2	HOUSING CAP RH ROOT RIB DISCONNECT	1	M
	S1640-9	HOUSING PIN LH ROOT RIB DISCONNECT	1	M
	S1640-9	HOUSING SOCKET LH ROOT RIB DISCONNECT	1	M
-50	S1660-1	CONTACTOR-REVERSE POLARITY EXTERNAL POWER	2	Q
		ATTACHING PARTS		
	AN520-416R8	SCREW	2	
	NAS679A4	NUT	2	
		---*---		
	0700092PC4	CABLE REVERSE POLARITY CONTACTOR TO STARTER CONTACTOR	1	M
	MS25171-3S	NIPPLE-TERMINAL COVER	2	Q
	S1807-1	COVER-CONTACTOR TERMINAL	2	S
	S1693-2	STA-STRAP	2	S
	MS21919DG7	CLAMP CLAMP 0700092PC4 CABLE	2	M
		ATTACHING PARTS		
	S1021Z8-8	SCREW	1	
	NAS446-4-3	NUT	1	
		---*---		
-51	0712031-1	MOUNTING BRACKET-FUSE & DIODE-EXT POWER & CLOCK	1	M
		ATTACHING PARTS		
-52	AN515-8R10	SCREW	2	M
-53	NAS679A08	NUT	2	M
		---*---		
-54	S1090-2	FUSE HOLDER-EXTERNAL POWER	1	M
	S1090-5	FUSE-EXTERNAL POWER 5 AMP	1	M
-55	X26263	RESISTOR-.75 OHMS TRTA	1	M
-56	20H3P	DIODE-EXTERNAL POWER SATA	1	M
	6F20-D	DIODE-EXTERNAL POWER ALTERNATE AFE	1	M
	43-1761	INSULATING HARDWARE SPD USED WITH 6F20-D	1	M
	1N1344A	DIODE-EXTERNAL POWER ALTERNATE SPD	1	M
		ATTACHING PARTS		
	S1438-2	WASHER-NYLON	1	M
	LN1032X	NUT-NYLON WECK	1	M
		---*---		

CONTINUED ON NEXT PAGE

FIGURE AND INDEX NO.	PART NUMBER	DESCRIPTION 1 2 3 4 5 6 7	UNITS PER ASSY	USABLE ON CODE
121 -57	C622004-0101	POWER SUPPLY-STROBE LIGHT ----------	1	V
		ATTACHING PARTS		
	AN3-3A	BOLT ----------	4	V
	AN960-10L	WASHER ----------	4	V
		---*---		
-58	S1660-1	CONTACTOR-EXTERNAL POWER ----------	1	Y
		ATTACHING PARTS		
-59	AN3-3A	BOLT ----------	2	Y
	AN960-10L	WASHER ----------	2	Y
	MS21044N3	NUT ----------	2	Y
		---*---		
-60	0700092-PC11	CABLE ASSY BATTERY CONTACTOR TO EXTERNAL POWER CONTACTOR -	1	Y
-61	SEE FIG 125B	CABLE ASSY ----------	1	Y
		NOTE. *THIS KIT INCLUDES DRY BATTERY AND ELECTROLYTE.		
		A---SERIAL 185-0001 THRU 18502310		
		B---SERIAL 185-0001 THRU 185-0512		
		C---SERIAL 185-0001 THRU 185-0776		
		D---SERIAL 185-0777 THRU 18502310		
		E---SERIAL 185-0777 THRU 185-0967		
		F---SERIAL 185-0968 THRU 18502310		
		G---SERIAL 185-0001 THRU 185-0967		
		H---SERIAL 185-0777 THRU 185-1066		
		J---SERIAL 185-1067 THRU 18502310		
		K---SERIAL 185-0777 THRU 185-1095		
		L---SERIAL 185-0001 THRU 185-1149		
		M---SERIAL 185-1150 THRU 18502310		
		N---SERIAL 185-0968 THRU 185-1095		
		P---SERIAL 185-1096 THRU 18502310		
		Q---SERIAL 185-1150 THRU 185-1343		
		R---SERIAL 185-0001 THRU 185-1343		
		S---SERIAL 185-1344 THRU 18502310		
		T---SERIAL 185-1150 THRU 185-1533		
		U---SERIAL 185-1534 THRU 18502310		
		V---SERIAL 18501833 THRU 18501886		
		W---SERIAL 185-0968 THRU 18502100		
		X---SERIAL 18502101 THRU 18502310		
		Y---SERIAL 18501833 THRU 18502310 FLOATPLANE		
		Z---SERIAL 185-0968 THRU 18502007, 18502026, 18502027		

FIGURE AND INDEX NO.	PART NUMBER	DESCRIPTION 1 2 3 4 5 6 7	UNITS PER ASSY	USABLE ON CODE
122 -		ELECTRICAL EQUIPMENT INSTALLATION	NP	A
- 1		GROUND SERVICE PLUG INSTL SEE FIG 125, 125A & 125B	1	
- 2	0713511-1	FLASHER ASSEMBLY-NAVIGATION LIGHTS	1	B
		ATTACHING PARTS		
	S1021Z6-6	SCREW	4	
	NAS446-2-3	NUT	4	
		---*---		
	2N441	TRANSISTOR DRC	2	
- 3	SEE FIG 123	CABIN LIGHTS INSTALLATION	1	
		50 AMP GENERATOR INSTALLATION	1	B
	PDM50	CIRCUIT BREAKER SPT	1	
		ATTACHING PARTS		
	AN507-632R12	SCREW	2	
		---*---		
- 4	0750140-5	GENERATOR-50 AMP	1	
- 5	0413205-11	REGULATOR-VOLTAGE 50 AMP	1	
		ATTACHING PARTS		
- 6	AN4-6A	BOLT	3	
		---*---		
	627377	PULLEY-V BELT CM	1	
- 6A	0750216-1	REGULATOR-VOLTAGE USED WITH ALTERNATOR	1	G
		WHEN EXHAUSTED USE C611001-0101		
	C611001-0101	REGULATOR-VOLTAGE USED WITH ALTERNATOR	1	H
		WEU C611001-0102		
	C611001-0102	REGULATOR-VOLTAGE USED WITH ALTERNATOR	1	H
		ATTACHING PARTS		
	AN4-6A	BOLT	2	G
	AN520-416R8	SCREW	2	H
		---*---		
	C5FF10A568A	PLUG ASSEMBLY FOR	1	G
	1250211-4	PLUG ASSEMBLY	1	H
- 7	0712605-201 *	BATTERY-AIRCRAFT	1	
- 8	0412007-1	CABLE-BATTERY GROUND	1	
		ATTACHING PARTS		
- 9	AN4-4A	BOLT	1	
	AN960-416	WASHER	1	
		---*---		
-10	0712603-2	CONTACTOR ASSEMBLY-MASTER SOLENOID	1	D
	S1579-1	CONTACTOR ASSEMBLY-MASTER SOLENOID WEU S1579-2	1	V
	S1579-2	CONTACTOR ASSEMBLY-MASTER SOLENOID	1	W
		ATTACHING PARTS		
-11	AN3-3A	BOLT	2	
	MS21044N3	NUT	2	
		---*---		
	0770657-1	DIODE ASSEMBLY-MASTER SOLENOID	1	D
-11A	0770728-1	DIODE ASSEMBLY-MASTER SOLENOID	1	E
-11B	S1807-1	COVER-CONTACTOR TERMINAL	2	R
	S2209-2	STA-STRAP	2	R
-12	0700092-PA1	CABLE BATTERY TO BATTERY SOLENOID	1	D
	0700092-PA6	CABLE BATTERY TO BATTERY SOLENOID	1	E
-13	0700092-PA4	CABLE BATTERY SOLENOID TO STARTER SOLENOID	1	D
	0700092-PA8	CABLE BATTERY SOLENOID TO STARTER SOLENOID	1	E
-13A	0700092-KA2	CABLE STARTER SOLENOID TO STARTER	1	
	SEE FIG 124	ROTATING BEACON INSTALLATION	1	K
	SEE FIG 124A	FLASHING BEACON INSTALLATION	1	L
-14	MS21919DG7	CLAMP	2	
		ATTACHING PARTS		
	NAS446-4-3	NUT	1	
	S1021Z8-8	SCREW	1	
		---*---		
-15		DELETED, NEVER USED		
-16	NAS557-8A	GROMMET	1	
	0713003-74	FAIRLEAD	1	
	S1095-4	SHIELD	2	
		ATTACHING PARTS		
	NAS446-4-3	NUT	1	
	S1021Z8-8	SCREW	1	
		---*---		

CONTINUED ON NEXT PAGE

Electrical Equipment

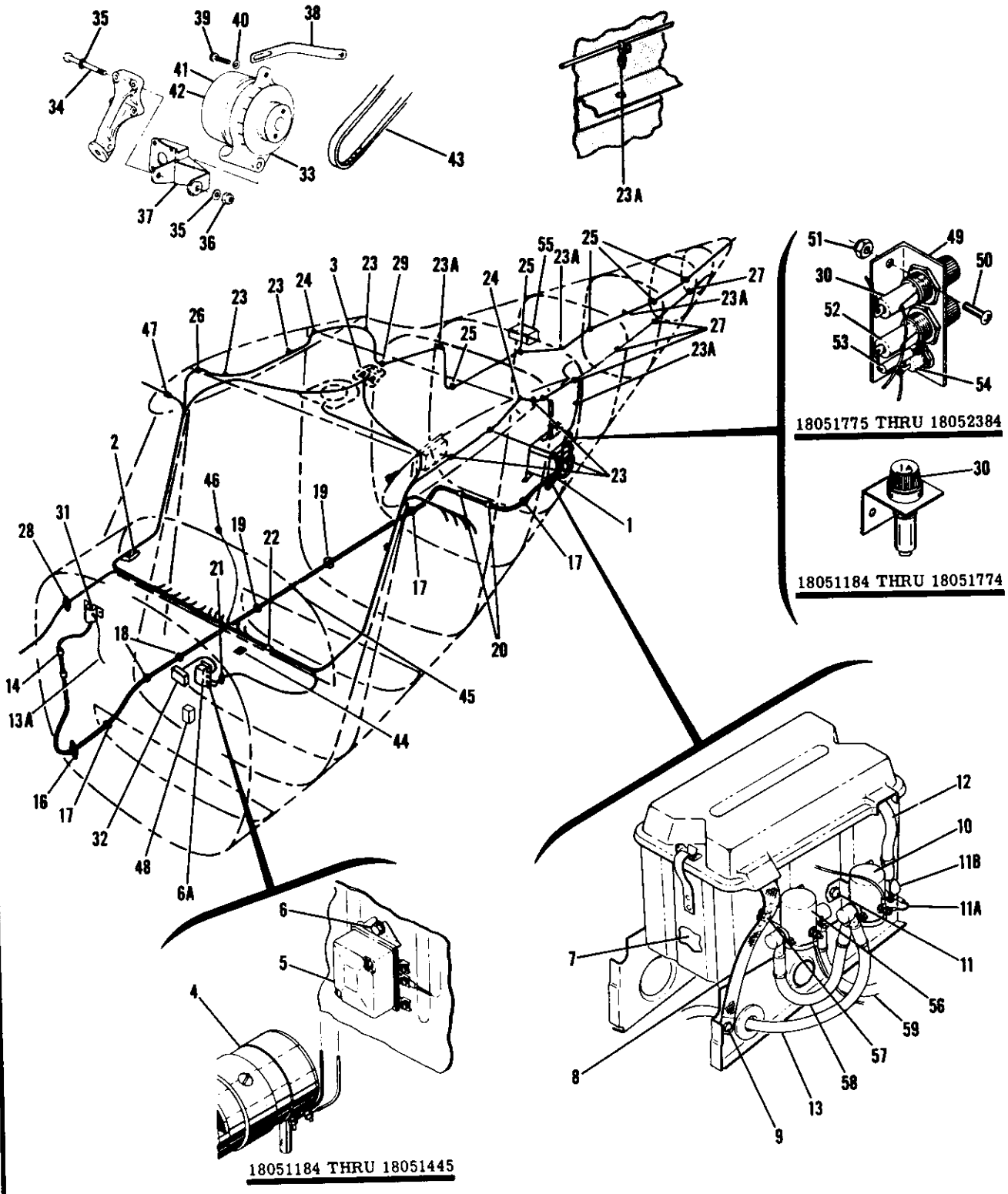

SERIAL 18051184 THRU 18052384

Figure 122. Fuselage Electrical Equipment Installation

FIGURE AND INDEX NO.	PART NUMBER	DESCRIPTION 1 2 3 4 5 6 7	UNITS PER ASSY	USABLE ON CODE
122 -17	MS35489-19	GROMMET	3	
-18	MS35489-48	GROMMET	2	
-19	MS35489-17	GROMMET	2	
-20	S1486DG7U	CLAMP	2	
		ATTACHING PARTS		
	S1021Z8-6	SCREW	1	
		---*---		
-21	NAS557-12A	GROMMET	1	
	S1095-6	SHIELD	2	
		ATTACHING PARTS		
	S1021Z8-8	SCREW	1	
	NAS446-4-3	NUT	1	
		---*---		
-22	S1486DG8U	CLAMP	1	
		ATTACHING PARTS		
	S1021Z8-8	SCREW	1	
		---*---		
-23	CM2679-2	STRAP	6	
-23A	A3493-012-1	CLIP TIN	3	
-24	S1155-4	CLAMP	2	
-25	MS35489-4	GROMMET	5	
-26	MS35489-4	GROMMET	1	
-27	MS35489-118	GROMMET	4	
-28	NAS557-6A	GROMMET	1	
	S1095-3	SHIELD HALF	2	
		ATTACHING PARTS		
	S1021Z8-6	SCREW	2	
	NAS446-4-3	NUT	2	
		---*---		
-29	1270015-1	STRAP ASSEMBLY	2	
		ATTACHING PARTS		
	S1021Z6-8	SCREW	2	
	NAS446-2-3	NUT	2	
		---*---		
-30	S1090-22	FUSE HOLDER-ELECTRIC CLOCK	1	
	S1091-1	FUSE-1 AMP	1	
-31	0750027-1	CONTACTOR-STARTER	1	K
	S1673-1	CONTACTOR-STARTER WHEN EXHAUSTED USE S1991-1	1	S
	S1991-1	CONTACTOR-STARTER	1	T
		ATTACHING PARTS		
	AN4-4A	BOLT	2	
	AN960-416	WASHER	2	
		---*---		
	MS25171-3S	NIPPLE-TERMINAL COVER	2	Q
	S1807-1	COVER-CONTACTOR TERMINAL	1	R
	S1808-2	COVER-CONTACTOR TERMINAL BATTERY CABLE	1	R
	S2209-2	STA-STRAP	2	R
-32	0770038-2	FILTER	1	C
		ATTACHING PARTS		
	AN515-10R6	SCREW	2	C
		---*---		
	SEE FIG 123B	ALTERNATOR INSTALLATION-SHOCK MOUNTED	1	N
		ALTERNATOR INSTALLATION	1	J
-33	0750217-1	ALTERNATOR ASSEMBLY-52 AMP WHEN EXHAUSTED SEE SERVICE - LETTER 66-1 FOR CONVERTING TO 60 AMP ALTERNATOR	1	F
	C611501-0102	ALTERNATOR ASSEMBLY-60 AMP	1	M
		ATTACHING PARTS		
-34	AN7-40A	BOLT	1	
-35	AN960-716	WASHER	2	
-36	MS20365-720C	NUT	1	
-37	0750213-1	SUPPORT ASSEMBLY	1	
		---*---		
-38	0750221-1	ARM-ADJUSTING	1	
		ATTACHING PARTS		
-39	0750220-1	BOLT	1	
-40	S1450-6-14-080	WASHER	1	
		---*---		

CONTINUED ON NEXT PAGE

FIGURE AND INDEX NO.	PART NUMBER	DESCRIPTION 1 2 3 4 5 6 7	UNITS PER ASSY	USABLE ON CODE
122 -41	0770038-2	NOISE FILTER	1	F
		ATTACHING PARTS		
	AN515-8R6	SCREW	2	
	NAS679A08	NUT	2	
		---*---		
-42	1250208-1	STRAP-FILTER MOUNT	1	F
		ATTACHING PARTS		
	AN520-10R5	SCREW	2	
	1250207-1	SPACER	2	
		---*---		
-43	S1597-1-30.8	BELT-ALTERNATOR DRIVE	1	M
	S1597-1-31.2	BELT-ALTERNATOR DRIVE	1	F
-44	S5508	SUPPRESSOR SATA	1	K
-45		INSTRUMENT PANEL ELECTRICAL COMPONENTS FOR SWITCHES	1	
		CIRCUIT BREAKERS-DIODE BOARD-BUS BAR RELAY-ELECTRIC		
		CLOCK-WARNING HORN SEE FIG 67, 68A, 68B, 68C&68D		
-46	S1637-2	HOUSING COMPASS DISCONNECT	2	L
	S1637-1	HOUSING COMPASS DISCONNECT	2	L
-47	S1638-1	HOUSING RH ROOT RIB DISCONNECT	1	L
	S1638-2	HOUSING CAP RH ROOT RIB DISCONNECT	1	L
	S1640-9	HOUSING PIN LH ROOT RIB DISCONNECT	1	L
	S1641-9	HOUSING SOCKET LH ROOT RIB DISCONNECT	1	L
-48	S1660-1	CONTACTOR-REVERSE POLARITY EXTERNAL POWER	1	L
		ATTACHING PARTS		
	AN520-416R8	SCREW	2	
	MS20365-428	NUT	2	
		---*---		
	0700092PC4	CABLE REVERSE POLARITY CONTACTOR TO STARTER CONTACTOR	1	L
	MS25171-3S	NIPPLE-TERMINAL COVER	2	P
	S1807-1	COVER-CONTACTOR TERMINAL	2	R
	S1693-2	STA-STRAP	2	R
	MS21919DG7	CLAMP CLAMP 0700092PC4 CABLE	2	L
		ATTACHING PARTS		
	S1021Z8-8	SCREW	1	
	NAS446-4-3	NUT	1	
		---*---		
-49	0712031-1	MOUNTING BRACKET-FUSE & DIODE-EXT POWER & CLOCK	1	L
		ATTACHING PARTS		
-50	AN515-8R10	SCREW	2	L
-51	NAS679A08	NUT	2	L
		---*---		
-52	S1090-2	FUSE HOLDER-EXTERNAL POWER	1	L
	S1091-5	FUSE-EXTERNAL POWER 5 AMP	1	L
-53	X26263	RESISTOR-.75 OHMS TRTA	1	L
-54	20H3P	DIODE-EXTERNAL POWER SATA	1	L
	6F200	DIODE-EXTERNAL POWER ALTERNATE AFE	1	L
	43-1761	INSULATING HARDWARE SPD USED WITH 6F20-D	1	L
	1N1344A	DIODE-EXTERNAL POWER ALTERNATE SPD	1	L
		ATTACHING PARTS		
	S1438-2	WASHER-NYLON	1	L
	LN1032X	NUT-NYLON WECK	1	L
		---*---		
-55	C622004-0101	POWER SUPPLY-STROBE LIGHT	1	U
		ATTACHING PARTS		
	AN3-3A	BOLT	4	U
	AN960-10L	WASHER	4	U
		---*---		

CONTINUED ON NEXT PAGE

FIGURE AND INDEX NO.	PART NUMBER	DESCRIPTION 1 2 3 4 5 6 7	UNITS PER ASSY	USABLE ON CODE
122 -56	S1660-1	CONTACTOR-EXTERNAL POWER ----------	1	X
		ATTACHING PARTS		
-57	AN3-3A	BOLT ----------	2	X
	AN960-10L	WASHER ----------	2	X
	MS21044N3	NUT ----------	2	X
		---*---		
-58	0700092-PC11	CABLE ASSY BATTERY CONTACTOR TO EXTERNAL POWER CONTACTOR -	1	X
-59	SEE FIG 125B	CABLE ASSY ----------	1	X
		NOTE. *THIS KIT INCLUDES DRY BATTERY AND ELECTROLYTE.		
		A---SERIAL 18051184 THRU 18052384		
		B---SERIAL 18051184 THRU 18051445		
		C---SERIAL 18051446 THRU 18052384		
		D---SERIAL 18051184 THRU 18051607		
		E---SERIAL 18051608 THRU 18052384		
		F---SERIAL 18051446 THRU 18051607		
		G---SERIAL 18051446 THRU 18051709		
		H---SERIAL 18051710 THRU 18052384		
		J---SERIAL 18051446 THRU 18051761		
		K---SERIAL 18051184 THRU 18051774		
		L---SERIAL 18051775 THRU 18052384		
		M---SERIAL 18051608 THRU 18051761		
		N---SERIAL 18051762 THRU 18052384		
		P---SERIAL 18051775 THRU 18051913		
		Q---SERIAL 18051184 THRU 18051913		
		R---SERIAL 18051914 THRU 18052384		
		S---SERIAL 18051775 THRU 18052073		
		T---SERIAL 18052074 THRU 18052384		
		U---SERIAL 18052176 THRU 18052205		
		V---SERIAL 18051608 THRU 18052293		
		W---SERIAL 18052294 THRU 18052384		
		X---SERIAL 18052176 THRU 18052384 FLOATPLANE		

Electrical Equipment (Cont)

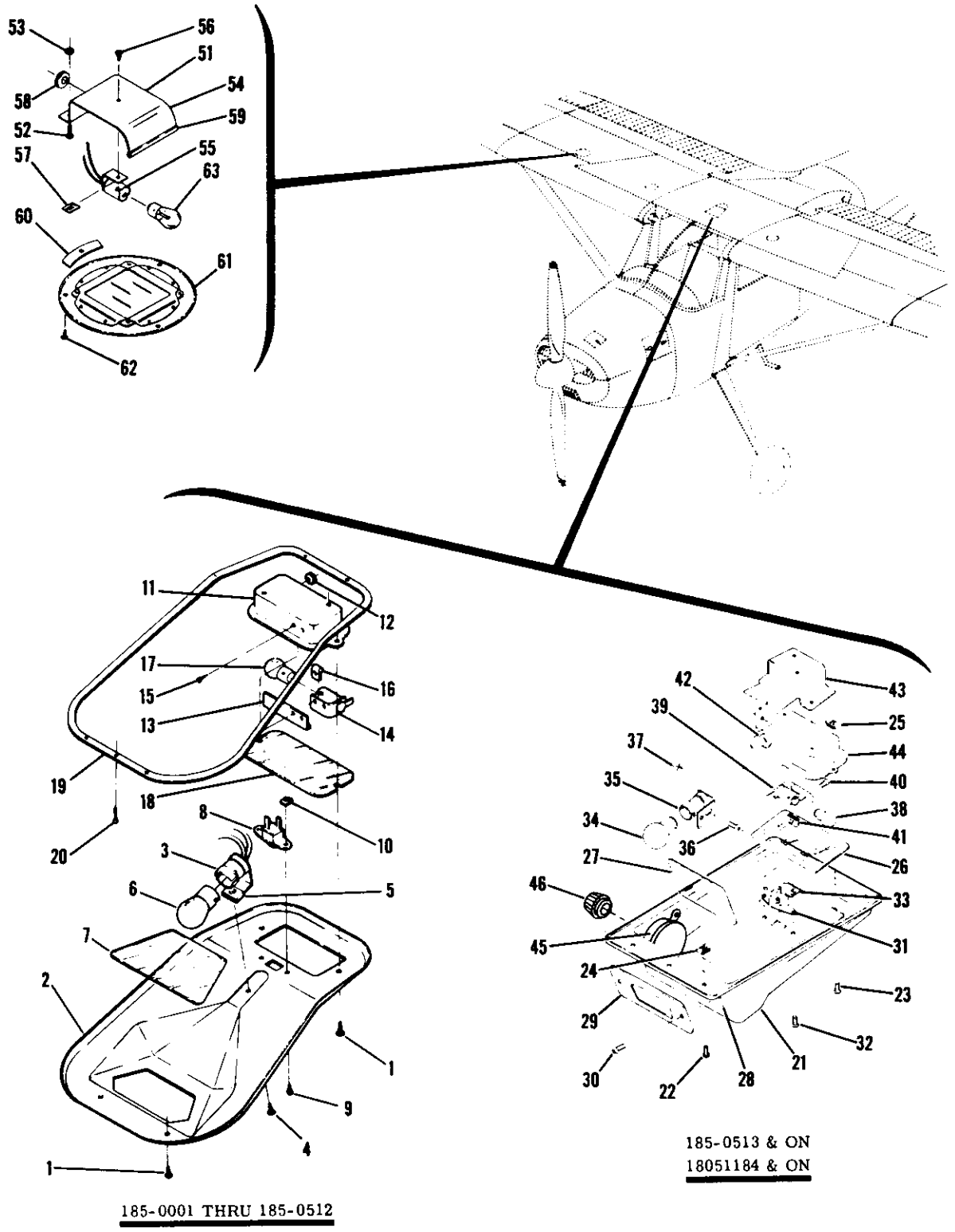

Figure 123. Cabin Lights & Courtesy Light Installation

FIGURE AND INDEX NO.	PART NUMBER	DESCRIPTION 1 2 3 4 5 6 7	UNITS PER ASSY	USABLE ON CODE
123 -		CABIN LIGHTS & COURTESY LIGHT INSTALLATION	NP	
	0710103-3	LIGHT ASSEMBLY-INSTRUMENT PANEL	1	A
		ATTACHING PARTS		
- 1	S1021Z4-8	SCREW	2	
		---*---		
- 2	0710103-5	PLATE-COVER	1	
- 3	0513208-1	SOCKET	1	
		ATTACHING PARTS		
- 4	S1021Z6-6	SCREW	1	
- 5	NAS446-2-3	NUT	1	
		---*---		
- 6	MS15584-2	BULB	1	
- 7	0710103-2	LENS	1	
- 8	0713029	SWITCH WEU S1831-1	1	
	S1831-1	SWITCH	1	
		ATTACHING PARTS		
- 9	S1021Z6-6	SCREW USED WITH 0713029	2	
	AN515-4R4	SCREW USED WITH S1831-1	2	
-10	NAS446-2-3	NUT USED WITH 0713029	2	
		---*---		
	0413142-5	LIGHT ASSEMBLY-DOME	1	A
-11	0413140	REFLECTOR	1	
-12	MS35489-4	GROMMET	1	
-13	0413140-2	RETAINER	1	
-14	0413138	SOCKET	1	
		ATTACHING PARTS		
-15	S1021Z4-4	SCREW	2	
-16	NAS395-1-3	NUT	2	
		---*---		
-17	S1876-1	BULB	1	
-18	0413141-1	LENS	1	
-19	1200130-1	PLATE-HEADLINER RETAINER	1	A
		ATTACHING PARTS		
-20	S1021Z6-6	SCREW	1	
		---*---		
-21	0511482-1	COVER ASSEMBLY	1	C
	0511482-9 ¤	COVER ASSEMBLY	1	D
		ATTACHING PARTS		
-22	S1021Z6-6	SCREW	2	
-23	S1021Z4-8	SCREW	2	
-24	NAS395-3-3	NUT	2	
-25	NAS395-1-3	NUT	2	
		---*---		
-26	0413141-1	LENS	1	
-27	0511482-3	LENS	1	
-28	NAS680A06K	NUTPLATE	1	
-29	0511482-5 ¤	SHIELD	1	
		ATTACHING PARTS		
-30	AN515-6R10	SCREW	2	
	AN960-6L	WASHER	2	
		---*---		
-31	0713029	SWITCH WEU S1831-1	1	B
	S1831-1	SWITCH	1	B
		ATTACHING PARTS		
-32	S1021Z6-6	SCREW USED WITH 0713029	2	
	AN515-4R4	SCREW USED WITH S1831-1	2	
-33	NAS446-2-3	NUT USED WITH 0713029	2	
		---*---		
-34	MS15584-2	LAMP	1	B
-35	0513208-1	SOCKET	1	B
		ATTACHING PARTS		
-36	S1021Z6-6	SCREW	1	
-37	NAS446-2-3	NUT	1	
		---*---		
-38	S1876-1	LAMP	1	B

CONTINUED ON NEXT PAGE

FIGURE AND INDEX NO.	PART NUMBER	DESCRIPTION 1 2 3 4 5 6 7	UNITS PER ASSY	USABLE ON CODE
123 -39	0413138	SOCKET	1	B
		ATTACHING PARTS		
-40	S1021Z4-6	SCREW	1	
-41	NAS395-1-3	NUT	1	
		---*---		
-42	MS35489-4	GROMMET	1	B
-43	0511483-2	BRACKET	1	B
-44	0413140-5	REFLECTOR	1	B
-45	0713247-200	RHEOSTAT ASSEMBLY INCLUDES RHEOSTAT, KNOB & 2 WASHERS	1	E
	XR6085	RHEOSTAT TRTA	1	F
-46	S1390-5	KNOB ASSEMBLY	1	F
-47		DELETED		
-48		DELETED		
-49		DELETED		
-50		DELETED		
		COURTESY LIGHT INSTALLATION	NP	
-51	0700616-1	SHIELD ASSEMBLY	1	
		ATTACHING PARTS		
-52	S1021Z6-8	SCREW	2	
-53	NAS446-2-3	NUT	2	
		---*---		
-54	0700616-2	SHIELD	1	
-55	0513208-1	SOCKET	1	
		ATTACHING PARTS		
-56	S1021Z6-8	SCREW	1	
-57	NAS446-2-3	NUT	1	
		---*---		
-58	MS35489-134	GROMMET	1	
-59	S1055-1-2.25	CHANNEL	1	
-60	0700617-1	SPACER	1	
-61	1270432-2	COVER ASSEMBLY	1	
		ATTACHING PARTS		
-62	S1021Z8-8	SCREW	6	
		---*---		
-63	MS15584-2	LAMP	1	
	SEE FIG 123A	MAP LIGHT INSTALLATION	NP	

NOTE. #THIS PART NUMBER MUST HAVE A SECOND DASH NUMBER ADDED TO DENOTE COLOR. REFER TO HOW TO ORDER INTERIOR PARTS-PAGE XIII.

A---SERIAL 185-0001 THRU 185-0512
B---SERIAL 185-0513 THRU 18502310
SERIAL 18051184 THRU 18052384
C---SERIAL 185-0513 THRU 185-0776
SERIAL 18051184 THRU 18051445
D---SERIAL 185-0777 THRU 18502310
SERIAL 18051446 THRU 18052384
E---SERIAL 185-0777 THRU 185-0981
SERIAL 18051446 THRU 18051625
F---SERIAL 185-0982 THRU 18502310
SERIAL 18051626 THRU 18052384

Electrical Equipment (Cont)

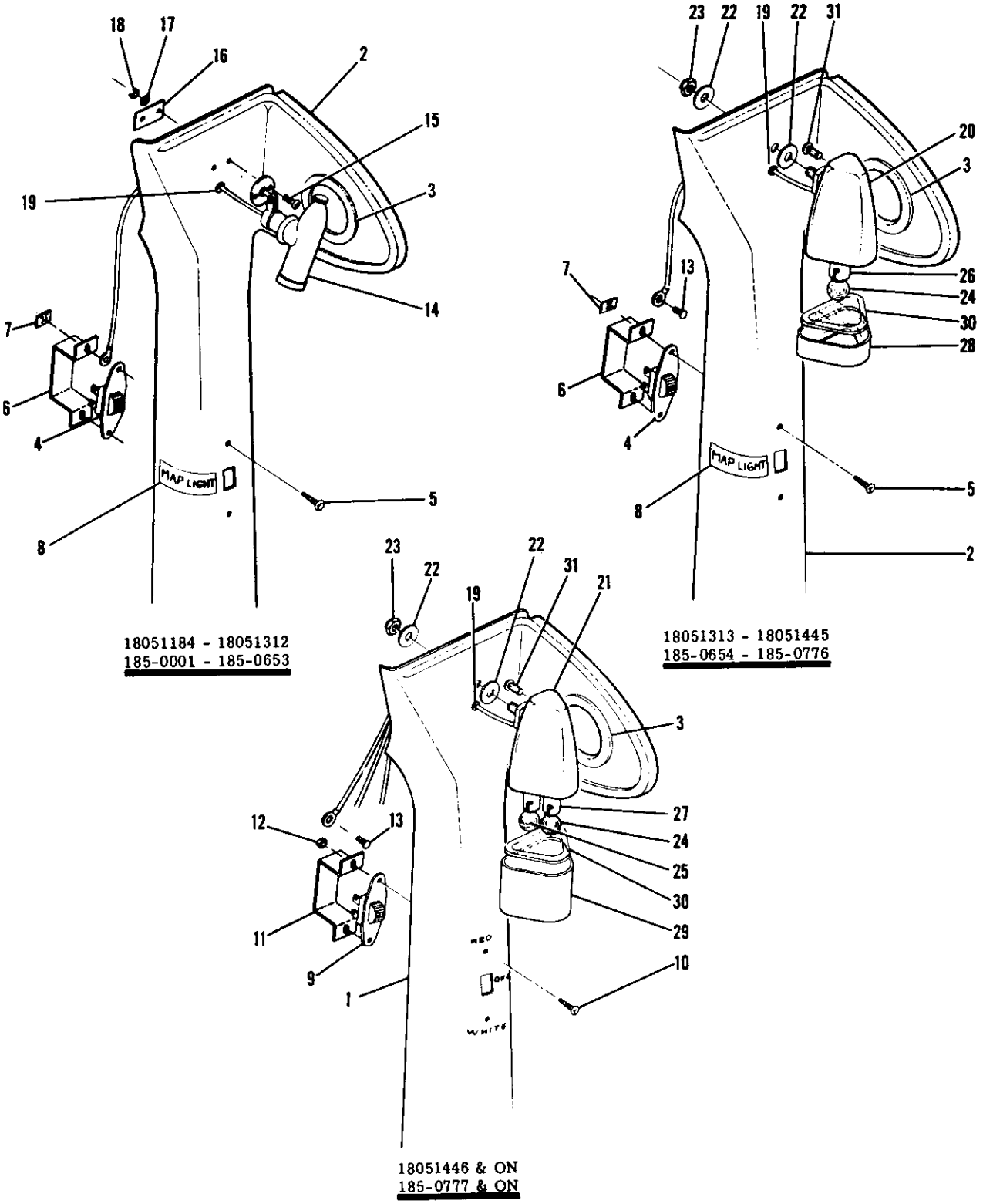

Figure 123A. Map Light Installation

FIGURE AND INDEX NO.	PART NUMBER	DESCRIPTION 1 2 3 4 5 6 7	UNITS PER ASSY	USABLE ON CODE
123A-		MAP LIGHT INSTALLATION	NP	
	0711133-11	SHIELD ASSEMBLY-FRONT DOORPOST LH	1	A
	0711133-21	SHIELD ASSEMBLY-FRONT DOORPOST LH	1	B
- 1	0711133-32 ¤	SHIELD ASSEMBLY-FRONT DOORPOST LH SWITCH NOT INCLUDED	1	H
	0711133-41 ¤	SHIELD-FRONT DOORPOST LH SWITCH NOT INCLUDED	1	J
	0413484-5 ¤	SHIELD ASSEMBLY-FRONT DOORPOST LH SWITCH NOT INCLUDED	1	L
	0413484-16 ¤	SHIELD ASSEMBLY-FRONT DOORPOST LH SWITCH NOT INCLUDED	1	M
- 2	0711133-6	SHIELD-FRONT DOORPOST LH	1	A
	0711133-23	SHIELD-FRONT DOORPOST-LH	1	B
- 3	0413235	GROMMET	1	K
- 4	0713029	SWITCH-MAP LIGHT	1	D
		ATTACHING PARTS		
- 5	S1021Z4-6	SCREW	2	D
- 6	0711691-1	SWITCH COVER	1	D
- 7	NAS446-1-3	NUT	2	D
		---*---		
- 8	0713210-4	PLACARD	1	D
- 9	S1501-1	SWITCH-MAP LIGHT	1	C
		ATTACHING PARTS		
-10	AN515-3R6	SCREW	2	C
-11	0711691-1	SWITCH COVER	1	C
-12	AN340-3	NUT	2	C
		---*---		
-13	S1021Z4-4	SCREW	1	G
-14	0713017-22	SPOTLIGHT ASSEMBLY	1	E
		ATTACHING PARTS		
-15	AN515-6R8	SCREW	2	E
-16	0511311-5	DOUBLER	1	E
-17	AN960-6	WASHER	2	E
-18	NAS679A06	NUT	2	E
		---*---		
-19	MS35489-4	GROMMET	1	
-20	1470089-10	MAPLIGHT ASSEMBLY	1	F
-21	1470089-14 ¤	MAPLIGHT ASSEMBLY	1	C
		ATTACHING PARTS		
-22	AN970-3	WASHER	2	G
-23	MS21044N3	NUT	1	G
		---*---		
-24	S1876-1	BULB	1	G
-25	1816TR	BULB GE	1	C
-26	1924	SOCKET SHHI	1	F
-27	IDI757	SOCKET ASSEMBLY ISES	1	C
-28	1470089-6	RETAINER	1	F
-29	0700148-1 ¤	HOOD	1	C
-30	1470089-8	LENS	1	G
-31	AN520-6-8	SCREW-ADJUSTMENT	1	G

NOTE. ¤THIS PART NUMBER MUST HAVE A SECOND DASH NUMBER ADDED TO DENOTE COLOR. REFER TO HOW TO ORDER INTERIOR PARTS-PAGE XIII.

A---SERIAL 18051184 THRU 18051208
SERIAL 185-0001 THRU 185-0538
B---SERIAL 18051209 THRU 18051445
SERIAL 185-0539 THRU 185-0776
C---SERIAL 18051446 THRU 18052384
SERIAL 185-0777 THRU 18502310
D---SERIAL 18051184 THRU 18051445
SERIAL 185-0001 THRU 185-0776
E---SERIAL 18051184 THRU 18051312
SERIAL 185-0001 THRU 185-0653
F---SERIAL 18051313 THRU 18051445
SERIAL 185-0654 THRU 185-0776
G---SERIAL 18051313 THRU 18052384
SERIAL 185-0654 THRU 18502310
H---SERIAL 18051446 THRU 18051607
SERIAL 185-0777 THRU 185-0967
J---SERIAL 18051608 THRU 18051823
SERIAL 185-0968 THRU 185-1197 & 185-1200
K---SERIAL 18051184 THRU 18051607
SERIAL 185-0001 THRU 185-0967
L---SERIAL 18051824 THRU 18052284
SERIAL 185-1198, 185-1199, 185-1201 THRU 18502090
M---SERIAL 18052285 THRU 18052384
SERIAL 18502091 THRU 18502310

Electrical Equipment (Cont)

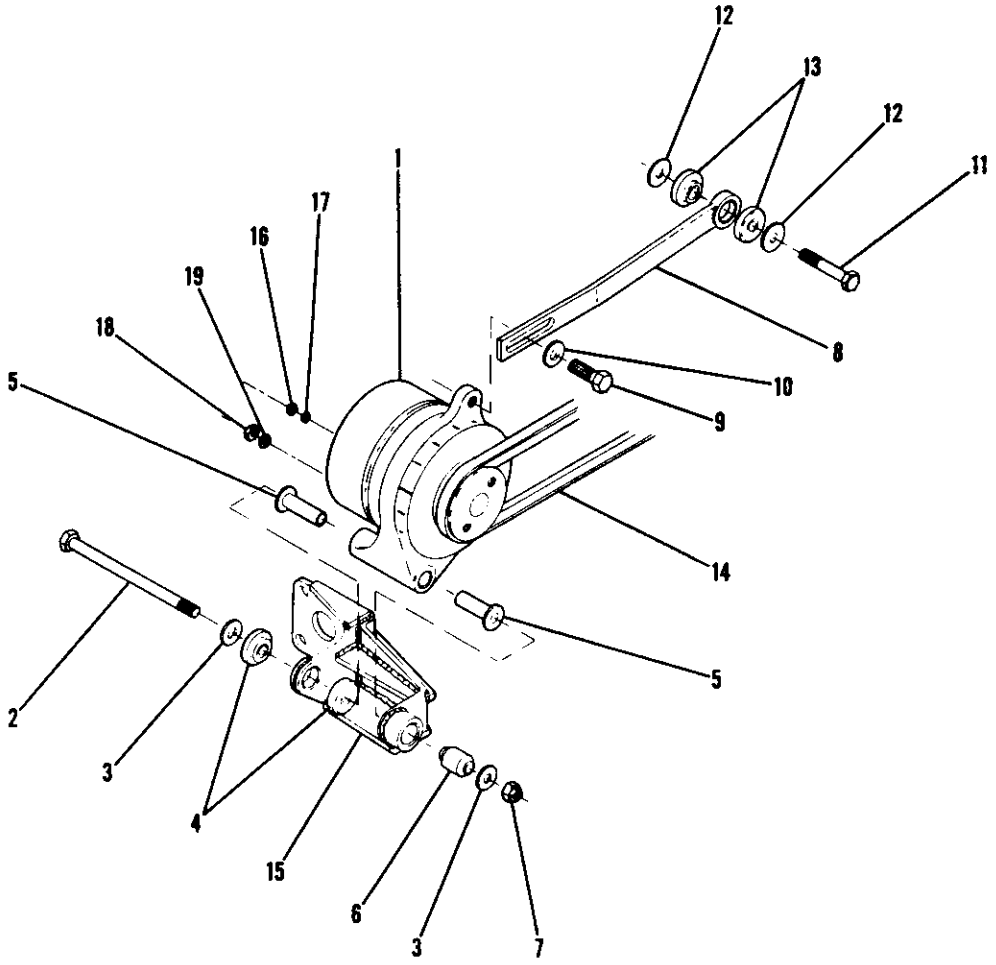

SERIAL 18051762 THRU 18052384
SERIAL 185-1096 THRU 18502310

Figure 123B. Shock Mounted Alternator

FIGURE AND INDEX NO.	PART NUMBER	DESCRIPTION 1 2 3 4 5 6 7	UNITS PER ASSY	USABLE ON CODE
1238-		SHOCK MOUNTED ALTERNATOR INSTALLATION	NP	A
- 1	C611501-0101	ALTERNATOR ASSEMBLY-60 AMP 14 VOLT WEU C611501-0102	1	B
	C611501-0102	ALTERNATOR ASSEMBLY-60 AMP 14 VOLT	1	C
		ATTACHING PARTS		
- 2	AN5-52A	BOLT	1	
- 3	S1450-5H14-063	WASHER	2	
- 4	J9534-20	BUSHING-RUBBER LO	2	
- 5	1250214-1	BUSHING	2	
- 6	J2005-2	BONDED MOUNT LO	1	
- 7	NAS679A5	NUT	1	
		---*---		
- 8	1250215-1	ARM-ALTERNATOR ADJUSTING	1	
		ATTACHING PARTS		
- 9	0750220-1	BOLT	1	
-10	S1450-6-14-080	WASHER	1	
-11	MS20074-05-14	BOLT	1	
-12	S1450-5H14-040	WASHER	2	
-13	J9534-20	BUSHING-RUBBER LO	2	
		---*---		
-14	S1597-1-30.8	BELT-ALTERNATOR DRIVE	1	
-15	1250213-15 *	SUPPORT ASSEMBLY-ALTERNATOR	1	
-16	S1505-3	NUT ON FIELD TERMINAL USED ON C611501-0101	1	B
	AN340-10	NUT ON FIELD TERMINAL USED ON C611501-0102	1	C
-17	AN935-10	WASHER	1	
-18	AN316C4R	NUT ON BATTERY TERMINAL USED ON C611501-0101	1	B
	AN340-416	NUT ON BATTERY TERMINAL USED ON C611501-0102	1	C
-19	AN936A416	WASHER	1	

NOTE. *WHEN INITIALLY ORDERING THIS PART FOR MODEL 180 AIRCRAFT PRIOR TO SERIAL 18052225 ALSO ORDER ONE 0750233-1 THROTTLE CONTROL BRACKET.

A---SERIAL 18051762 THRU 18052384
SERIAL 185-1096 THRU 18502310
B---SERIAL 18051762 THRU 18052142
SERIAL 185-1096 THRU 18501710
C---SERIAL 18052143 THRU 18052384
SERIAL 18501711 THRU 18502310

Electrical Equipment (Cont)

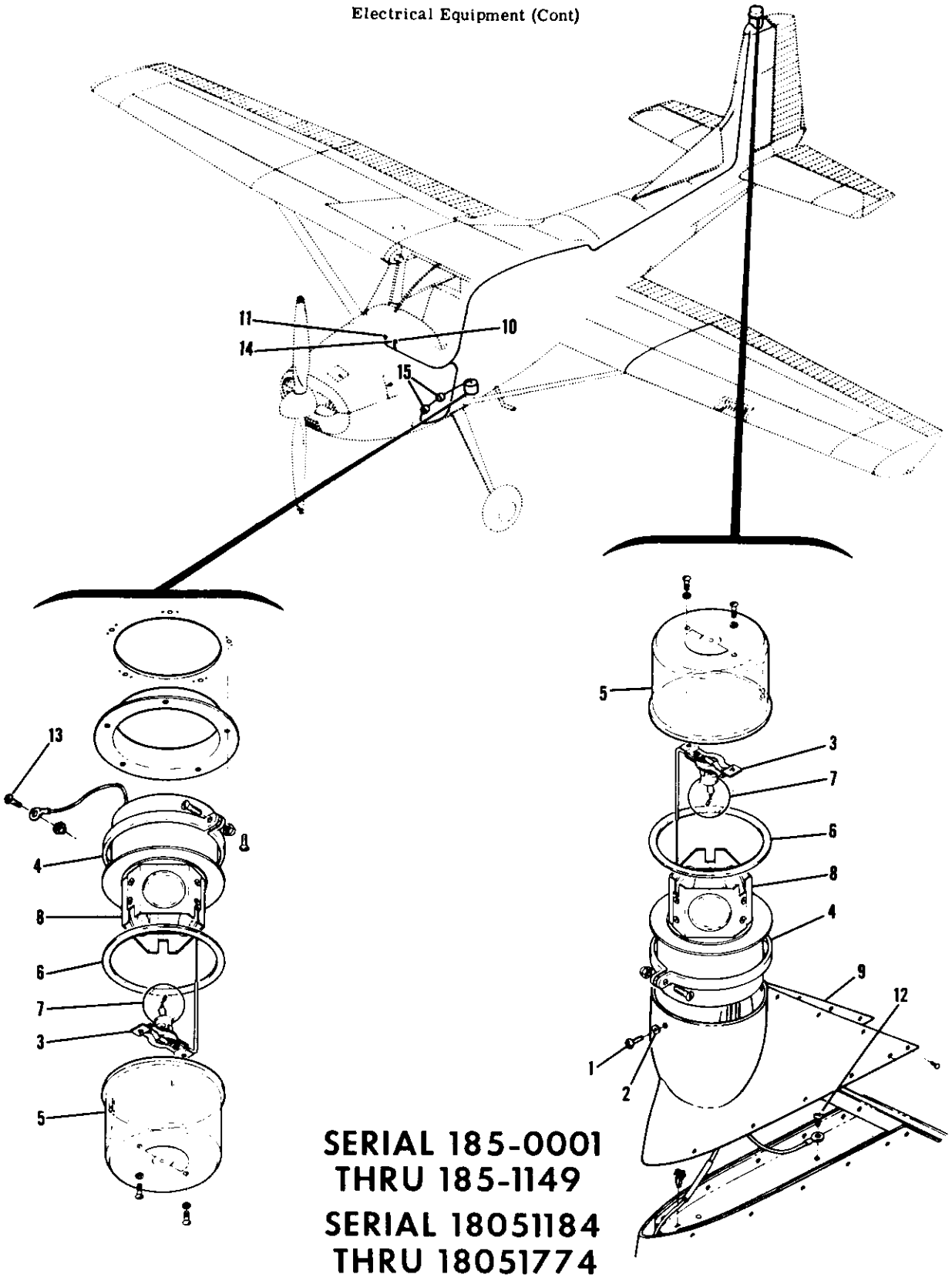

SERIAL 185-0001
THRU 185-1149
SERIAL 18051184
THRU 18051774

Figure 124. Rotating Beacon Installation

FIGURE AND INDEX NO.	PART NUMBER	DESCRIPTION 1 2 3 4 5 6 7	UNITS PER ASSY	USABLE ON CODE
124 -		ROTATING BEACON INSTALLATION	NP	C
	0700120-1	BEACON ASSEMBLY-ROTATING	1	
		ATTACHING PARTS		
- 1	AN515-6R6	SCREW	6	
- 2	AN960-6L	WASHER	3	
		---*---		
- 3	WRM-15	SOCKET ASSEMBLY WHEL	1	
- 4	WRM-25	CLAMP ASSEMBLY WHEL	1	
- 5	WRM-10	DOME ASSEMBLY WHEL	1	
- 6	WRM-30	GASKET-DOME WHEL	1	
- 7	WRM-44-12	BULB WHEL	1	
- 8	WRM-20	LENS ASSEMBLY WHEL	1	
	WRM-39-12	MOTOR WHEL	1	
	S1433-1	PLACARD	1	A
- 9	0731015-1	TIP-COVER	1	B
	0700031-2	TIP-COVER	1	
-10	0713303-2	KNOB	1	
-11	PSM10N	CIRCUIT BREAKER MTCC	1	
-12	AN515-8R6	SCREW	1	D
-13	AN515-6R8	SCREW	1	
	NAS679A06	NUT	1	
-14	0713026-4	SWITCH	2	D
-15	S1592-1A	HARNESS BAND UC		
		ATTACHING PARTS	1	D
	S1021Z6-8	SCREW		
		---*---		

A---SERIAL 185-0001 THRU 185-1149
B---SERIAL 18051184 THRU 18051774
C---SERIAL 185-0001 THRU 185-1149
SERIAL 18051184 THRU 18051774
D---SERIAL 185-0001 THRU 185-0540

Electrical Equipment (Cont)

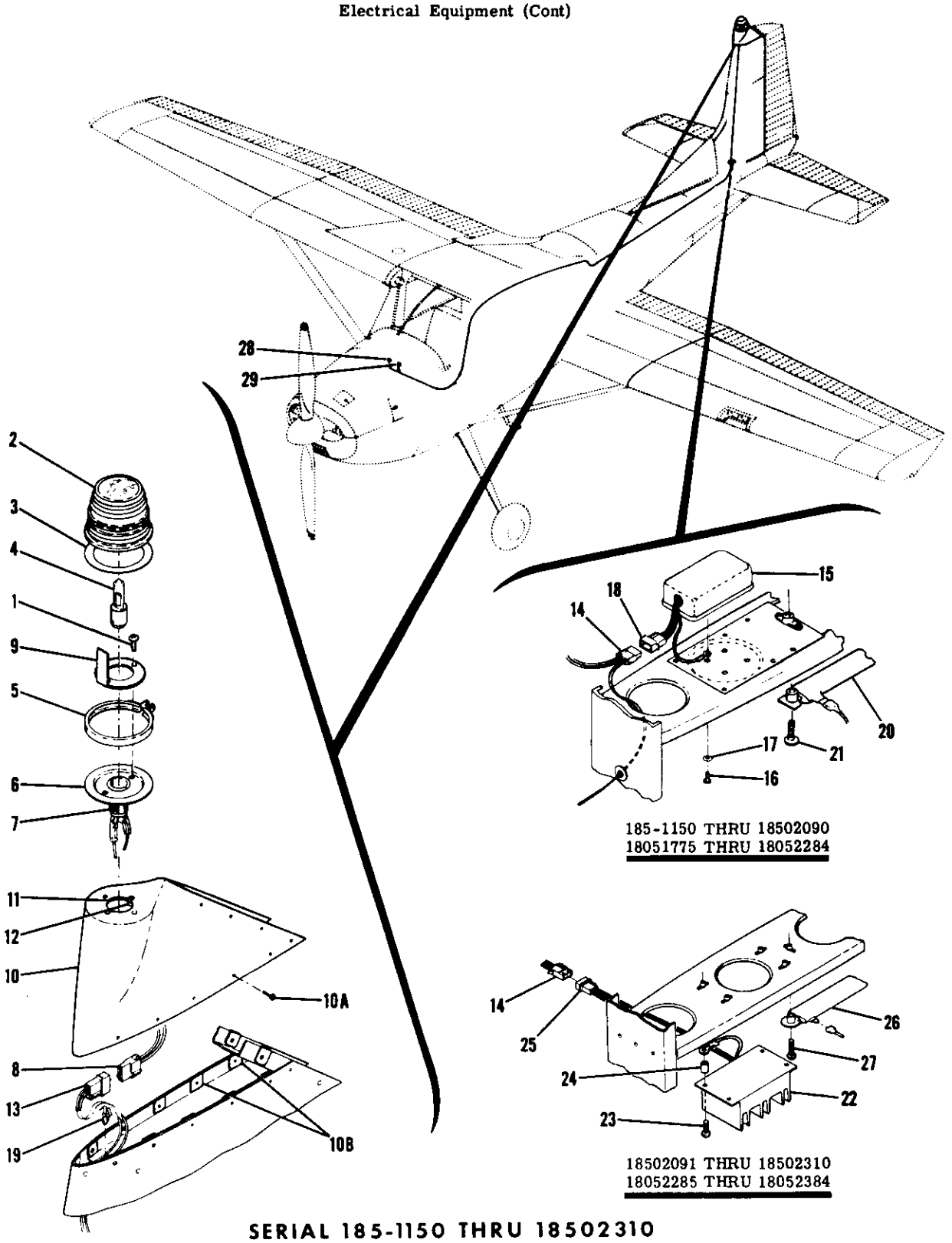

SERIAL 185-1150 THRU 18502310
SERIAL 18051775 THRU 18052384

Figure 124A. Flashing Beacon Installation

FIGURE AND INDEX NO.	PART NUMBER	DESCRIPTION 1 2 3 4 5 6 7	UNITS PER ASSY	USABLE ON CODE
124A-		FLASHING BEACON INSTALLATION	NP	A
	C621001-0103	LIGHT ASSEMBLY-FLASHING BEACON WEU C621001-0106	1	L
	C621001-0106	LIGHT ASSEMBLY-FLASHING BEACON	1	M
		ATTACHING PARTS	2	
- 1	AN515-8R8	SCREW		
		---*---	1	
		DOME AEFS	1	
- 2	C17325	GASKET AEFS	1	L
- 3	C17330	LAMP AEFS WEU 40-14	1	M
- 4	C17312-3	LAMP-125 WATT	1	
	40-14	CLAMP ASSEMBLY AEFS	1	L
- 5	C17326	PLATE-MOUNTING AEFS WEU C17331-6	1	M
- 6	C17331-3	PLATE-MOUNTING AEFS	1	
	C17331-6	SOCKET ASSEMBLY AEFS	1	
- 7	C17313	HOUSING-PLUG	1	
- 8	S1638-1	BAFFLE-FLASHING BEACON	1	B
- 9	0731607-1	TIP ASSEMBLY-FIN	1	C
-10	0731019-2-791	TIP ASSEMBLY-FIN		
	0731019-1-791	ATTACHING PARTS	18	
-10A	S1021Z8-8	SCREW	16	
-10B	NAS395-16-3	NUT		
		---*---	1	
-11	0431017-2	PLATE ASSEMBLY-MOUNTING	2	
-12	NAS680A08	NUTPLATE	1	
-13	S1638-2	HOUSING-CAP	1	
-14	S1638-1	HOUSING-PLUG	1	D
-15	C594501-0201	FLASHER ASSEMBLY-BEACON LIGHT WEU C594501-0203	1	E
	C594501-0203	FLASHER ASSEMBLY-BEACON LIGHT		
		ATTACHING PARTS	4	G
-16	AN515-8R6	SCREW	4	G
-17	AN936A8	WASHER		
		---*---	1	D
-18	S1638-2	HOUSING-CAP	2	E
	S1638-2	HOUSING-CAP	1	H
-19	A3493-012-1	CLIP TIN	1	K
	MS35489-13	GROMMET	1	F
-20	OR95-1.5	RESISTOR		
		ATTACHING PARTS	2	F
-21	AN515-8R11	SCREW		
		---*---	1	J
-22	C594502-0101	FLASHER ASSEMBLY-BEACON LIGHT		
		ATTACHING PARTS	4	J
-23	AN515-8R10	SCREW	4	J
-24	NAS43HT3-16	SPACER		
		---*---	1	J
-25	S1638-2	HOUSING-CAP	1	J
-26	OR95-1.5	RESISTOR		
		ATTACHING PARTS	2	J
-27	AN515-8R12	SCREW		
		---*---	1	
-28	SEE FIG 68D	CIRCUIT BREAKER	1	
-29	SEE FIG 68D	SWITCH		

A---SERIAL 185-1150 THRU 18502310
SERIAL 18051775 THRU 18052384
B---SERIAL 185-1150 THRU 18502310
C---SERIAL 18051775 THRU 18052384
D---SERIAL 185-1150 THRU 185-1586
SERIAL 18051775 THRU 18052099
E---SERIAL 185-1587 THRU 18502090
SERIAL 18052100 THRU 18052284
F---SERIAL 18052174 THRU 18052284
G---SERIAL 185-1150 THRU 18502090
SERIAL 18051775 THRU 18052284
H---SERIAL 18051775 THRU 18052284
J---SERIAL 18502091 THRU 18502310
SERIAL 18052285 THRU 18052384
K---SERIAL 18052285 THRU 18052384
L---SERIAL 185-1150 THRU 18502146
SERIAL 18051775 THRU 18052313
M---SERIAL 18502147 THRU 18502310
SERIAL 18052314 THRU 18052384

Electricial Equipment (Cont)

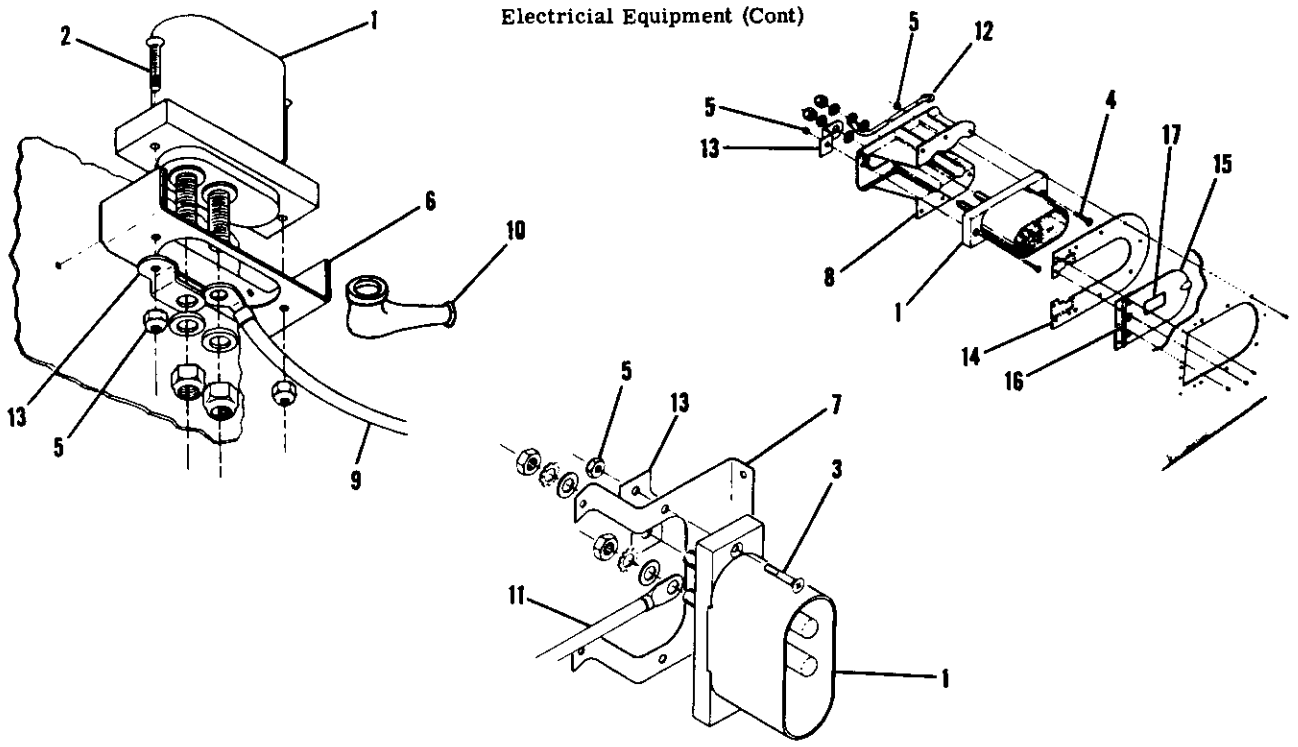

SERIAL 185-0001 THRU 185-1149 & 18501820 THRU 18501832
SERIAL 18051184 THRU 18051774 & 18052171 THRU 18052175

Figure 125. Ground Service Plug Installation

FIGURE AND INDEX NO.	PART NUMBER	DESCRIPTION 1 2 3 4 5 6 7	UNITS PER ASSY	USABLE ON CODE
125 -		GROUND SERVICE PLUG INSTALLATION	NP	C
- 1	AN2552-3A	RECEPTACLE-GROUND SERVICE PLUG	1	
		ATTACHING PARTS		
- 2	AN510-1032R14	SCREW	2	A
- 3	AN509-10R14 *	SCREW	2	A
- 4	AN510-10R16	SCREW	2	B
- 5	MS21044N3	NUT	2	
		---*---		
- 6	0713036-2	BRACKET ASSEMBLY	1	A
- 7	0713123-1 *	BRACKET	1	A
- 8	0312155-3	BRACKET	1	B
- 9	0700005-90	CABLE	1	A
-10	MS25171-3S	NIPPLE	1	A
-11	0700039-PC2 *	CABLE	1	A
-12	0700085-PC2	CABLE	1	B
-13	0312155-10	STRAP-GROUND	1	
-14	0312155-6	DOUBLER-DOOR	1	B
-15	0312155-4	DOOR ASSEMBLY-ACCESS	1	B
-16	S147	SPRING-DOOR ASSEMBLY	1	
-17	0500130-1	PLACARD-12 VOLT DC ONLY	1	B

NOTE. *USED ONLY WHEN WINSLOW OIL FILTER IS INSTALLED.

A---SERIAL 185-0001 THRU 185-0079
B---SERIAL 185-0080 THRU 185-1149 &
FLOATPLANES 18501820 THRU 18501832
SERIAL 18051184 THRU 18051774 &
FLOATPLANES 18052171 THRU 18052175
C---SERIAL 185-0001 THRU 185-1149 &
FLOATPLANES 18501820 THRU 18501832
SERIAL 18051184 THRU 18051774 &
FLOATPLANES 18052171 THRU 18052175

Electrical Equipment (Cont)

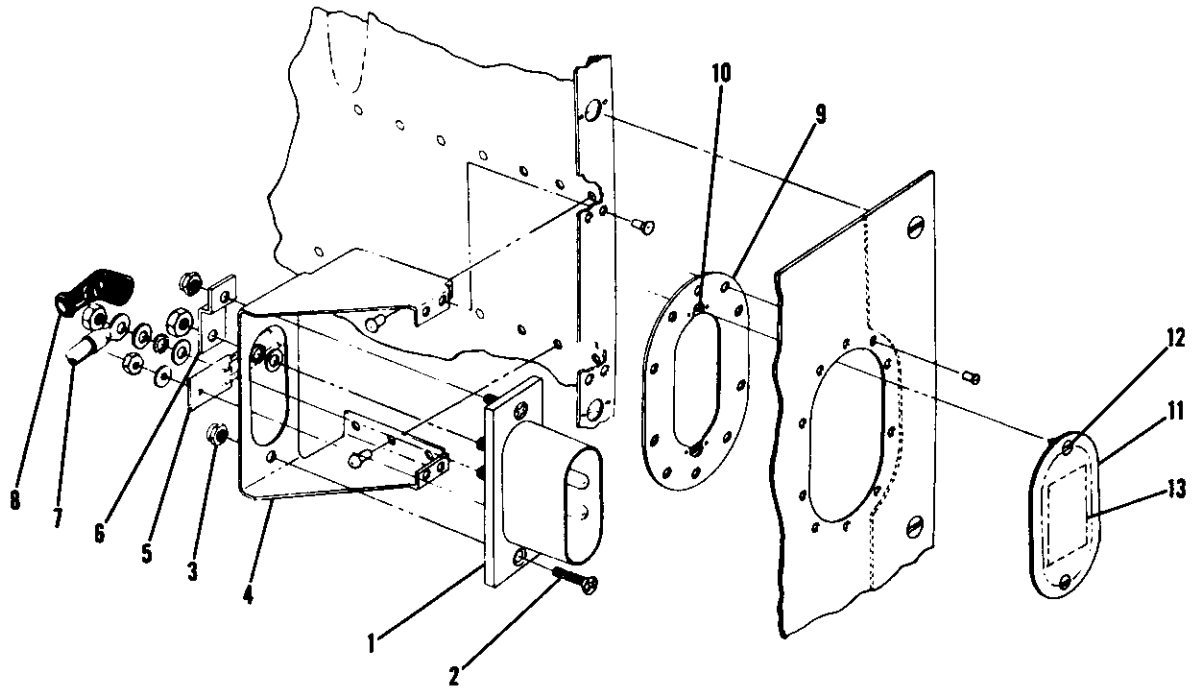

SERIAL 185-1150 THRU 18502310
SERIAL 18051775 THRU 18052384

Figure 125A. Ground Service Plug Installation

FIGURE AND INDEX NO.	PART NUMBER	DESCRIPTION 1 2 3 4 5 6 7	UNITS PER ASSY	USABLE ON CODE
125A-	*	GROUND SERVICE PLUG INSTALLATION	NP	A
- 1	AN2552-3A	RECEPTACLE-GROUND SERVICE PLUG	1	
		ATTACHING PARTS		
- 2	AN509-10R14	SCREW	2	
- 3	MS20365-1032	NUT	2	
		---*---		
- 4	0713711-1	BRACKET-GROUND SERVICE PLUG SUPPORT	1	
- 5	1570043-3	BOARD ASSEMBLY-DIODE	1	
- 6	0312155-10	GROUND STRAP	1	
- 7	0700092-PC3	CABLE EXTERNAL POWER TO REVERSE POLARITY CONTACTOR	1	
- 8	MS25171-3S	NIPPLE	1	
	S292-14	SLEEVE	1	
- 9	0752610-1	DOUBLER ASSEMBLY	1	
-10	S1115-19	RECEPTACLE-STUD	2	
-11	0752611-1	DOOR ASSEMBLY	1	
-12	S1115-10	STUD SLOTTED HEAD	2	
	S1150-30	STUD PHILLIPS HEAD	2	
	S1115-9	RING	2	
-13	1213535-1	PLACARD	1	B
	1205024-1	PLACARD	1	C
		FUSE & DIODE ASSEMBLY-EXTERNAL POWER SEE FIG 121 & 122	1	

NOTE. *THIS INSTALLATION IS NOT USED ON FLOATPLANES SERIAL 18052171 & ON & 18501820 & ON. SEE FIGURE 125 & 125B FOR FLOATPLANE INSTL.

A---SERIAL 185-1150 THRU 18502310
SERIAL 18051775 THRU 18052384
B---SERIAL 185-1150 THRU 185-1447
SERIAL 18051775 THRU 18051993
C---SERIAL 185-1448 THRU 18502310
SERIAL 18051994 THRU 18052384

Electrical Equipment (Cont)

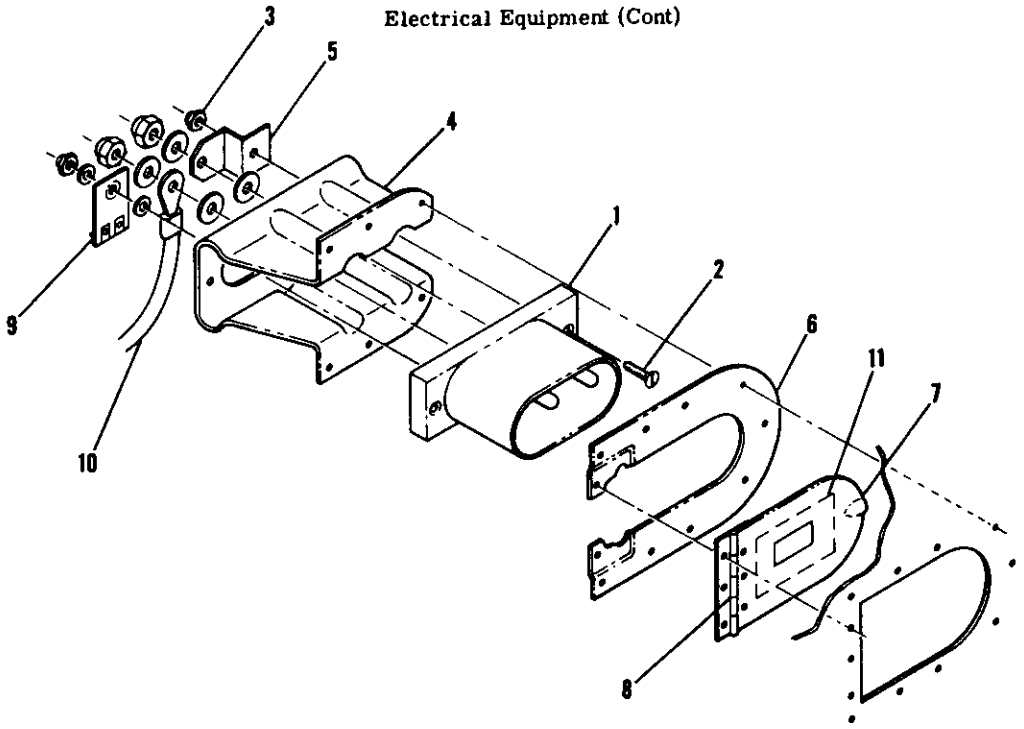

SERIAL 18501833 THRU 18502310
SERIAL 18052176 THRU 18052384

Figure 125B. Ground Service Plug Installation

FIGURE AND INDEX NO.	PART NUMBER	DESCRIPTION 1 2 3 4 5 6 7	UNITS PER ASSY	USABLE ON CODE
125B-		GROUND SERVICE PLUG INSTALLATION	NP	A
- 1	AN2552-3A	RECEPTACLE-GROUND SERVICE PLUG	1	
		ATTACHING PARTS		
- 2	AN510-10R14	SCREW	2	
- 3	MS21044N3	NUT	2	
		---*---		
- 4	0312155-3	BRACKET	1	
- 5	0312155-10	STRAP-GROUND	1	
- 6	0312155-6	DOUBLER	1	
- 7	0312155-4	DOOR ASSY-ACCESS	1	
- 8	S147	SPRING	1	
- 9	1570043-3	DIODE BOARD ASSY	1	
-10	0700092PC3	CABLE ASSY RECEPTACLE TO CONTACTOR	1	
-11	1205024-1	PLACARD-12 VOLT DC ONLY	1	
		A---SERIAL 18501833 THRU 18502310 FLOATPLANE		
		SERIAL 18052176 THRU 18052384 FLOATPLANE		

Electrical Equipment (Cont)

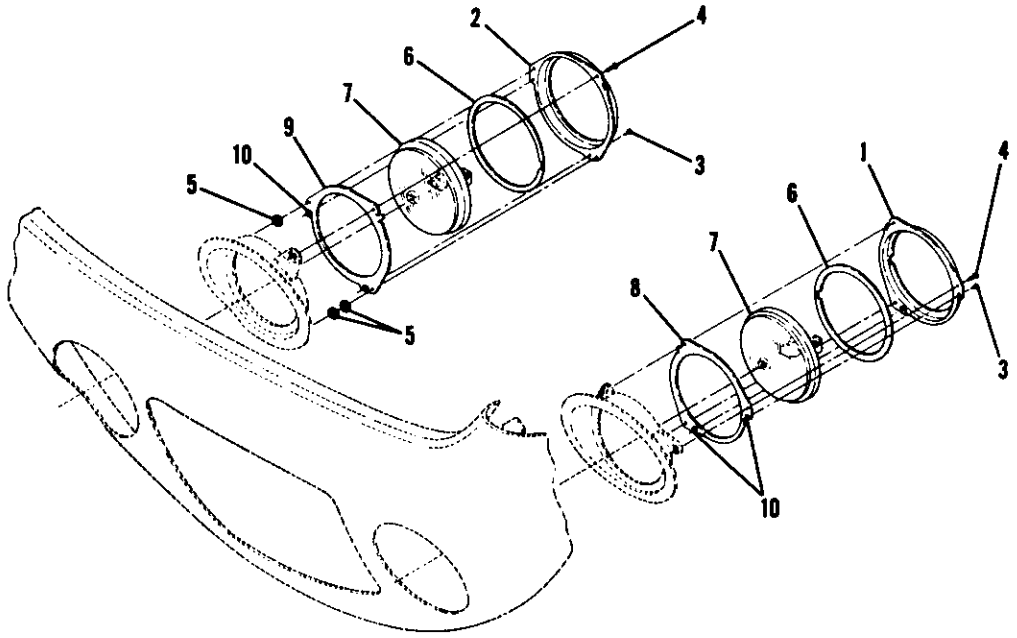

SERIAL 18502091 THRU 18502310
SERIAL 18052285 THRU 18052384

Figure 125C. Landing Light Installation-Cowl

FIGURE AND INDEX NO.	PART NUMBER	DESCRIPTION 1 2 3 4 5 6 7	UNITS PER ASSY	USABLE ON CODE
125C-		LANDING LIGHT INSTALLATION-COWL	1	A
- 1	0752644-1	BRACKET-LH	1	
- 2	0752644-2	BRACKET-RH	1	
		ATTACHING PARTS		
- 3	S1021Z6-8	SCREW	2	
- 4	AN515-8R8	SCREW	3	
- 5	NAS620-10	WASHER RH ONLY	3	
		---*---		
- 6	0752646-1	GASKET	AR	
- 7	4509	LIGHT-LANDING 12 VOLT	2	
- 8	0752644-5	PLATE ASSEMBLY-LH	1	
- 9	0752644-6	PLATE ASSEMBLY-RH	1	
-10	NAS488-1-3	NUT	2	
		A---SERIAL 18502091 THRU 18502310		
		SERIAL 18052285 THRU 18052384		

Floatplane Fittings

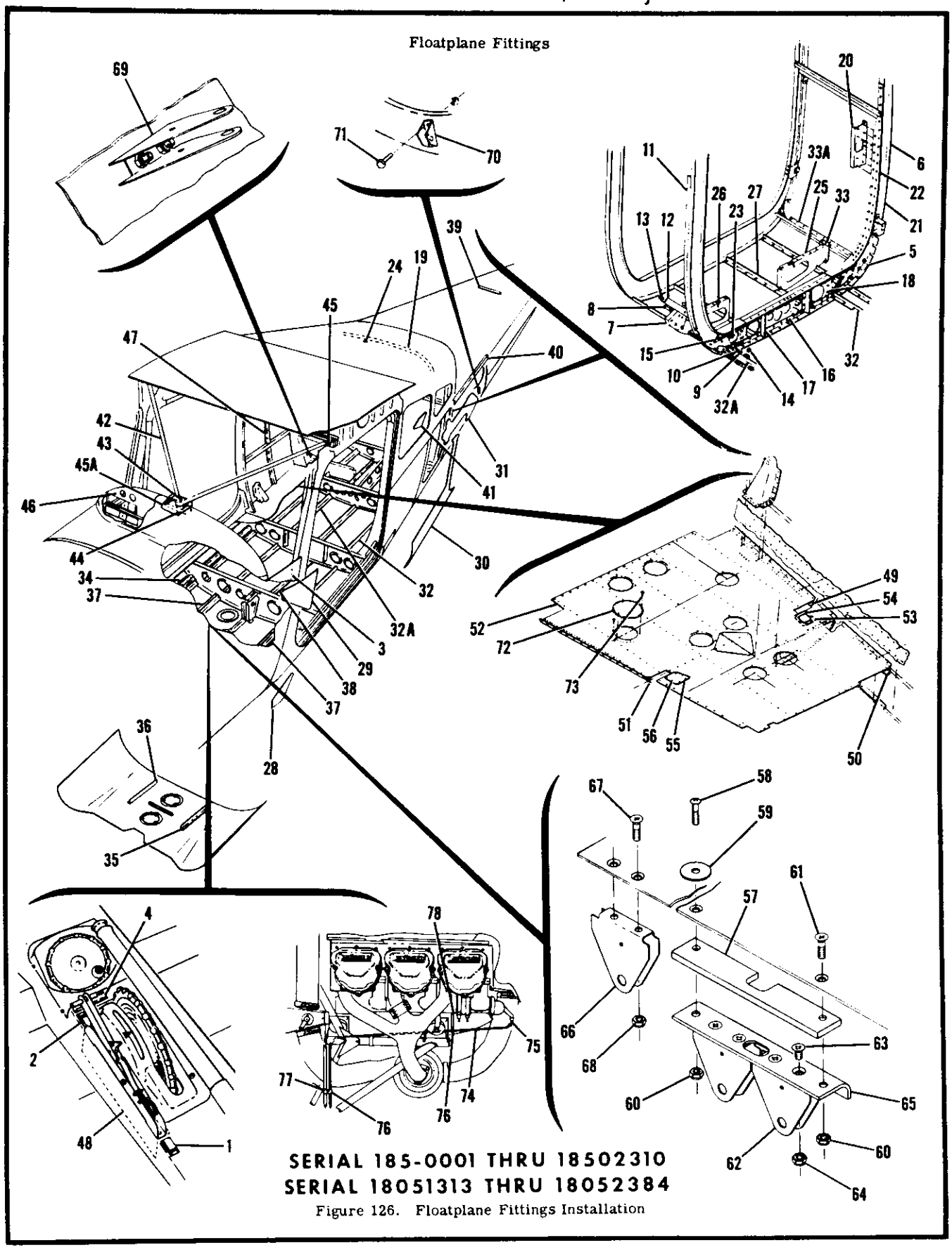

SERIAL 185-0001 THRU 18502310
SERIAL 18051313 THRU 18052384

Figure 126. Floatplane Fittings Installation

FIGURE AND INDEX NO.	PART NUMBER	DESCRIPTION 1 2 3 4 5 6 7	UNITS PER ASSY	USABLE ON CODE
126 -		FLOATPLANE & AMPHIBIAN FITTINGS INSTALLATION	NP	D
		EDO 249-2870A, EDO 628-2960 & EDO 597-2790		
- 1	0713226-2	PLACARD-WATER RUDDER RETRACT	1	V
- 2	0713226-1	PLACARD-WATER RUDDER EXTEND	1	V
- 3		PLACARD-OPERATIONAL LIMITATIONS SEE FIG 2, 2A, 2B & 2C	1	
- 4	0341007-6	PLACARD-WATER RUDDER INSTRUCTIONS	1	V
- 5	0541128	BLOCK-STRUT ATTACHMENT FORWARD	2	
- 6	0711086-1	BULKHEAD ASSEMBLY-STA. 90.00	1	T
	0711086-6	BULKHEAD ASSEMBLY-STA. 90.00	1	U
- 7	0541129	BLOCK-STRUT ATTACHMENT AFT	2	
		ATTACHING PARTS		
- 8	AN4-12A	BOLT	5	
- 9	NAS679A4	NUT	5	
-10	AN960-416	WASHER	5	
		---*---		
-11	0742111-1	REINFORCEMENT-BULKHEAD STA. 90.00	1	
-12	0742120-2	ANGLE-REINFORCEMENT-RH	1	
	0742120-1	ANGLE-REINFORCEMENT-LH	1	
		ATTACHING PARTS		
-13	AN3-4A	BOLT	1	
-14	MS21044N3	NUT	1	
		---*---		
-15	0711089-1	ANGLE-BULKHEAD REINFORCEMENT UPPER FORWARD	1	V
	0711089-2	ANGLE ASSY-BULKHEAD REINFORCEMENT UPPER FORWARD	1	W
	NAS698A3	NUTPLATE	4	W
	0710008-1	ANGLE-BULKHEAD REINFORCEMENT UPPER AFT	1	
-16	0711087-1	ANGLE-BULKHEAD REINFORCEMENT LOWER FORWARD	1	
	0711087-2	ANGLE-BULKHEAD REINFORCEMENT LOWER AFT	1	
-17	0742110-7	ANGLE-FORWARD SIDE	2	
-18	0742115-28	ANGLE-AFT SIDE	2	
-19	0711112-4	RETAINER	1	
-20	0711088-1	REINFORCEMENT-LH	1	T
	0711088-3	REINFORCEMENT-LH	1	U
	0711088-2	REINFORCEMENT-RH	1	T
	0711088-4	REINFORCEMENT-RH	1	U
-21	0711112-8	BULKHEAD	1	
-22	0711086-2	SPLICE PLATE	2	T
	0711086-5	SPLICE PLATE	2	U
-23	NAS697A4	NUTPLATE	1	
-24	NAS697A3	NUTPLATE	1	
-25	0742115-5	BULKHEAD-LH	1	
-26	0742115-6	BULKHEAD-RH	1	
-27	0710025-1	ANGLE	2	
-28	0710010-3	DOUBLER-FORWARD LOWER LH	1	
	0710010-4	DOUBLER-FORWARD LOWER RH	1	
-29	0710010-5	DOUBLER-FORWARD UPPER LH	1	
	0710010-6	DOUBLER-FORWARD UPPER RH	1	
-30	0710010-7	DOUBLER-LOWER AFT LH	1	
	0710010-8	DOUBLER-LOWER AFT RH	1	
-31	0710010-9	DOUBLER-UPPER AFT LH	1	
	0710010-10	DOUBLER-UPPER AFT RH	1	
-32	0742115-21	ANGLE-STIFFENER LH	1	
-32A	0742115-22	ANGLE-STIFFENER RH	1	
-33	0742115-7	CLIP-BAGGAGE DOOR JAMB	1	
-33A	0711101-20	JAMB-BAGGAGE DOOR LWR WEU 0711101-44	1	R
	0711101-44	JAMB-BAGGAGE DOOR LWR	1	S
-34	0710010-17	ANGLE	2	
	0710010-18	ANGLE	2	
-35	0713170-1	ANGLE-LH	1	
-36	0713170-2	ANGLE-RH	1	
-37	0710010-11	ANGLE	2	
-38	0710010-22	ANGLE	1	
	0742123-2	BRACKET	1	
-39	0710010-16	ANGLE	1	
-40	0712014-1	ANGLE-SIDE LH	1	
	0712014-2	ANGLE-SIDE RH	1	
-41	0711095-1	DOUBLER-STA. 90.00	2	

CONTINUED ON NEXT PAGE

FIGURE AND INDEX NO.	PART NUMBER	DESCRIPTION 1 2 3 4 5 6 7	UNITS PER ASSY	USABLE ON CODE
126 -42	0513003-19	BRACE ASSEMBLY	1	K
	0713238-2	BRACE ASSEMBLY	1	M
	0713878-2	BRACE ASSEMBLY	1	T
	0713878-5	BRACE ASSEMBLY	1	U
		ATTACHING PARTS		
-43	AN4-13A	BOLT	1	K
	NAS1304-14	BOLT	1	J
	NAS1304-3	BOLT	2	N
	NAS679A4	NUT	1	K
	NAS680A4	NUTPLATE	1	J
	NAS696A4	NUTPLATE	2	N
-44	0713156-1	DOUBLER	1	K
	0713239-3	DOUBLER ASSEMBLY WHEN EXHAUSTED USE 0713239-6	1	M
	0713239-6	DOUBLER ASSEMBLY	1	N
-45	AN3-20A	BOLT	4	
	MS21044N3	NUT	4	
		---*---		
-45A	0713878-9	COVER	1	U
		ATTACHING PARTS		
	S1021Z4-6	SCREW	3	U
		---*---		
-46	0713125-6	STATIONARY PANEL ASSEMBLY HEAVY DUTY	1	A
	0713125-9	STATIONARY PANEL ASSEMBLY HEAVY DUTY	1	B
	0713185-3	STATIONARY PANEL ASSEMBLY HEAVY DUTY	1	E
		STATIONARY PANEL ASSEMBLY SEE FIG 68A, 68B & 68C	1	J
-47	0711096-2	REINFORCEMENT	1	
	0711096-1	REINFORCEMENT	1	
-48	0713175-1	ANGLE-OUTER	1	AB
	0713174-1	ANGLE-INNER	1	AB
	0710010-15	FLOORBOARD ASSEMBLY-FLOATPLANE	1	T
	0710010-23	FLOORBOARD ASSEMBLY-FLOATPLANE	1	U
-49	0742115-31	ANGLE-FLOORBOARD RH FORWARD	1	
-50	0742115-12	ANGLE-FLOORBOARD RH REAR	1	
-51	0742115-11	ANGLE-FLOORBOARD LH FORWARD	1	
-52	0512107-39	FLOORBOARD ASSEMBLY	1	T
	0512107-43	FLOORBOARD ASSEMBLY	1	U
-53	0713173-2	DOUBLER RH	1	
	0713173-1	DOUBLER LH	1	
-54	NAS444-5-3	NUTPLATE	6	
-55	0713173-5	ACCESS PLATE LH	1	
	0713173-6	ACCESS PLATE RH	1	
		ATTACHING PARTS		
-56	S1021Z8-8	SCREW	6	
		---*---		
-57	0742124-3	SPACER	1	
	0742124-2	PULLEY BRACKET ASSEMBLY	1	AA
		ATTACHING PARTS		
-58	AN520-10R12	SCREW	1	AA
-59	AN970-3	WASHER	1	AA
-60	MS21044N3	NUT	2	AA
-61	AN507-1032R12	SCREW	1	AA
		---*---		
-62	0711059-1	BRACKET-PULLEY	2	AA
		ATTACHING PARTS		
-63	AN507-1032R6	SCREW	4	AA
-64	MS21044N3	NUT	4	AA
		---*---		
-65	0742124-1	MOUNT	1	AA
-66	0711059-1	BRACKET-PULLEY	2	AA
		ATTACHING PARTS		
-67	AN507-1032R8	SCREW	2	AA
-68	MS21044N3	NUT	2	AA
		---*---		
-69	0711059-1	BRACKET-PULLEY	2	AA
		ATTACHING PARTS		
	AN520-10R6	SCREW	2	AA
	MS21044N3	NUT	2	AA
		---*---		
-70	0512160-2	BRACKET-PULLEY	2	AA
		ATTACHING PARTS		
-71	AN520-10R6	SCREW	2	AA
	MS21044N3	NUT	2	AA
		---*---		

CONTINUED ON NEXT PAGE

FIGURE AND INDEX NO.	PART NUMBER	DESCRIPTION 1 2 3 4 5 6 7	UNITS PER ASSY	USABLE ON CODE
126 -72	S225-1	COVER-INSPECTION OPENING	5	
		ATTACHING PARTS		
-73	49330	TRIMOUNT STUD UC	3	
		---*---		
	0751003-31	ENGINE MOUNT ASSEMBLY-FLOATPLANE SEE FIGURE 76	1	F
	0751001-27	ENGINE MOUNT ASSEMBLY-FLOATPLANE SEE FIGURE 77	1	G
-74	0500106-360	DRAIN TUBE	1	C
		ATTACHING PARTS		
-75	MS20823-4D	ELBOW	1	
-76	S148504L	CLAMP	2	
	S1021Z8-8C	SCREW	2	
-77	AN742D4	CLAMP	1	
-78	0750205-1	STRAP	1	
		---*---		
	MS20392-1C55	PIN-HINGE LH DOOR HINGE ONLY	2	H
	MS24665-132	PIN-COTTER LH DOOR HINGE ONLY	2	H
	0711135-1	DIAL-AIRSPEED STD AMPHIBIAN & 628-2960 FLOATS ONLY	1	X
	0711138-1	DIAL-AIRSPEED STD AMPHIBIAN & 628-2960 FLOATS ONLY	1	Y
	0711138-3	DIAL-TRUE AIRSPEED AMPHIBIAN & 628-2960 FLOATS ONLY	1	Y
	0711138-2	DIAL-AIRSPEED STD ALL AMPHIBIAN & FLOATPLANES	1	Z
	0711138-4	DIAL-TRUE AIRSPEED ALL AMPHIBIAN & FLOATPLANES	1	Z
	SEE FIG 98	BUNGEE ASSEMBLY	1	F
	S1239-13	CONTROL-STRAINER DRAIN	1	K
	S1239-24	CONTROL-STRAINER DRAIN	1	P
	S1517-4	CONTROL-STRAINER DRAIN	1	Q
	SEE FIG 708	AUXILIARY REFUELING EQUIPMENT INSTALLATION	1	L

A---SERIAL 185-0001 THRU 185-0237
B---SERIAL 185-0238 THRU 185-0653
C---SERIAL 185-0256 THRU 18502310
D---SERIAL 185-0001 THRU 18502310
SERIAL 18051313 THRU 18052384
E---SERIAL 185-0654 THRU 185-0776
SERIAL 18051313 THRU 18051445
F---SERIAL 185-0001 THRU 18502310
G---SERIAL 18051313 THRU 18052384
H---SERIAL 185-0762 THRU 18502310
SERIAL 18051408 THRU 18052384
J---SERIAL 185-0777 THRU 18502310
SERIAL 18051446 THRU 18052384
K---SERIAL 185-0001 THRU 185-0776
SERIAL 18051313 THRU 18051445
L---SERIAL 185-0968 THRU 18502310
SERIAL 18051640 THRU 18052384
M---SERIAL 185-0777 THRU 185-1199
SERIAL 18051446 THRU 18051826
N---SERIAL 185-1200 THRU 18502310
SERIAL 18051827 THRU 18052384
P---SERIAL 185-0777 THRU 185-1300
SERIAL 18051446 THRU 18051875
Q---SERIAL 185-1301 THRU 18502310
SERIAL 18051876 THRU 18052384
R---SERIAL 185-0001 THRU 18501667
SERIAL 18051313 THRU 18052134
S---SERIAL 18501668 THRU 18502310
SERIAL 18052135 THRU 18052384
T---SERIAL 185-1200 THRU 18501832
SERIAL 18051827 THRU 18052175
U---SERIAL 18501833 THRU 18502310
SERIAL 18052176 THRU 18052384
V---SERIAL 185-0001 THRU 18502090
SERIAL 18051313 THRU 18052284
W---SERIAL 18502091 THRU 18502310
SERIAL 18052285 THRU 18052384
X---SERIAL 18051313 THRU 18052220
Y---SERIAL 18052221 THRU 18052284
Z---SERIAL 185-0001 THRU 18502090
AA---SERIAL 185-0001 THRU 18502112
SERIAL 18051513 THRU 18052297
AB---SERIAL 185-0001 THRU 185-0653

Floatplane (Cont)

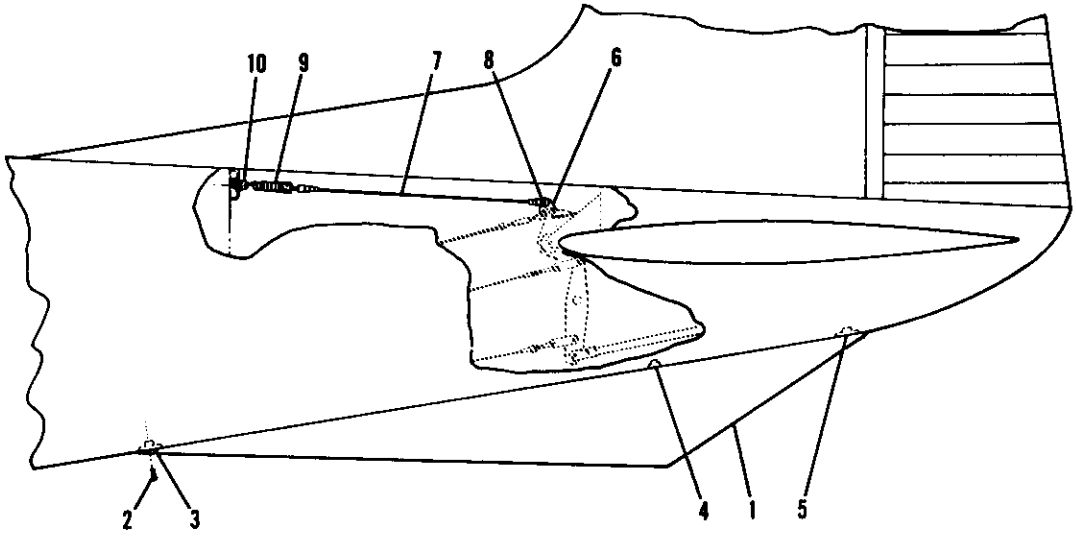

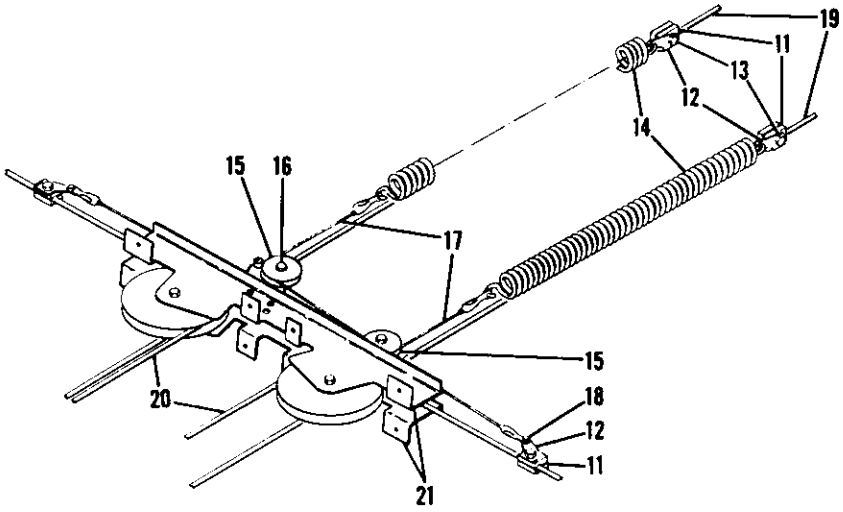

AILERON-RUDDER INTERCONNECT

SERIAL 18502091 THRU 18502310
SERIAL 18052285 THRU 18052384

Figure 126A. Floatplane & Ski Plane Components

FIGURE AND INDEX NO.	PART NUMBER	DESCRIPTION 1 2 3 4 5 6 7	UNITS PER ASSY	USABLE ON CODE
126A-		FLOATPLANE & SKI PLANE COMPONENTS	NP	A
- 1	0712764-2	VENTRAL FIN ASSY-FLOATPLANE	1	
		ATTACHING PARTS		
- 2	AN525-832R8	SCREW	22	
		---*---		
- 3	NAS1023A08K	NUTPLATE	18	
- 4	NAS697A08K	NUTPLATE	2	
- 5	NAS696A08K	NUTPLATE	2	
- 6	0742006-1	BELLCRANK-RUDDER CENTERING SPRING	2	
- 7	0742006-2	CABLE ASSY-RUDDER CENTERING	2	
		ATTACHING PARTS		
- 8	MS20392-2C9	PIN	2	
	AN960-10	WASHER	2	
	MS24665-151	COTTER PIN	2	
		---*---		
- 9	0742005-1	SPRING-RUDDER CENTERING	2	
-10	AN43B5A	EYEBOLT	2	
		ATTACHING PARTS		
	AN960PD416	WASHER	2	
	NAS679A4	NUT	1	
		---*---		
-11	0742002-5	CLAMP	8	
-12	0742002-6	LINK	4	
		ATTACHING PARTS		
-13	AN3-6A	BOLT	1	
	MS21044N3	NUT	1	
		---*---		
-14	0742003-2	SPRING ASSY	2	
	S292-18	SLEEVING 10.50 IN LG BKI	1	
-15	S378-1	PULLEY	2	
		ATTACHING PARTS		
-16	AN3-6A	BOLT	1	
	AN960PD10	WASHER ONE EACH SIDE OF BRACKET	2	
	MS21044N3	NUT	1	
		---*---		
-17	0510105-334	CABLE ASSY-RUDDER-AILERON INTERCONNECT	2	
		ATTACHING PARTS		
-18	AN3-4A	BOLT	1	
	MS21044N3	NUT	1	
		---*---		
-19	SEE FIG 98 & 99	RUDDER CONTROL CABLE	1	
-20	SEE FIG 95	AILERON CONTROL CABLE	1	
-21	SEE FIG 32A	PULLEY BRACKETS	2	
		A---SERIAL 18502091 THRU 18502310		
		SERIAL 18052285 THRU 18052384		

FIGURE AND INDEX NO.	PART NUMBER	DESCRIPTION 1 2 3 4 5 6 7	UNITS PER ASSY	USABLE ON CODE
127 -		FLOATPLANE FITTINGS INSTALLATION ED0249-2870	NP	A
- 1	0341007-5	PLACARD-WATER RUDDER	1	
		ATTACHING PARTS		
- 2	S1021Z4-5	SCREW	2	
		---*---		
- 3	0541129	BLOCK-STRUT ATTACHMENT AFT	2	
		ATTACHING PARTS		
- 4	AN4-12A	BOLT	5	
- 5	NAS679A4	NUT	5	
- 6	AN960-416	WASHER	5	
- 7	AN5-32A	BOLT	2	
- 8	22NA17A-054	NUT EN	2	
- 9	S1021Z8-4	SCREW	2	
		---*---		
-10	0541128	BLOCK-STRUT ATTACHMENT FORWARD	2	
		ATTACHING PARTS		
-11	AN5-15A	BOLT	2	
-12	AN960-516	WASHER	2	
-13	22NA17A-054	NUT EN	2	
-14	S1021Z8-4	SCREW	2	
		---*---		
-15	0341118	DOUBLER RH	1	
	0341118-1	DOUBLER LH	1	
-16	0541126	SPACER-FUSELAGE SKIN LAP RH	1	
	0541126-1	SPACER-FUSELAGE SKIN LAP LH	1	
-17	0742115-51	PLATE-OUTER SPLICE RH	1	
	0742115-50	PLATE-OUTER SPLICE LH	1	
-18	0742115-16	ANGLE-REINFORCEMENT UPPER	1	
	0742115-19	ANGLE-REINFORCEMENT LOWER AFT	1	
-19	0742115-20	ANGLE-REINFORCEMENT LOWER FORWARD	1	
-20	NAS680A4	NUTPLATE	3	
-21	0742110-7	ANGLE-FORWARD SIDE	2	
-22	0742115-28	ANGLE-AFT SIDE	2	
-23	S349	GROMMET-DRAIN	10	
-24	S237-1	DOUBLER-INSPECTION OPENING	5	
-25	S225-1	COVER-INSPECTION OPENING	5	
		ATTACHING PARTS		
-26	49330	TRIMOUNT STUD UC	3	
		---*---		
-27	0742115-21	ANGLE-STIFFENER	1	
-28	0742115-22	ANGLE-STIFFENER	1	
-29	0710025-1	ANGLE-STIFFENER	2	
-30	0742115-5	BULKHEAD-REINFORCEMENT LH	1	
-31	0742115-6	BULKHEAD-REINFORCEMENT RH	1	

CONTINUED ON NEXT PAGE

Floatplane (Cont)

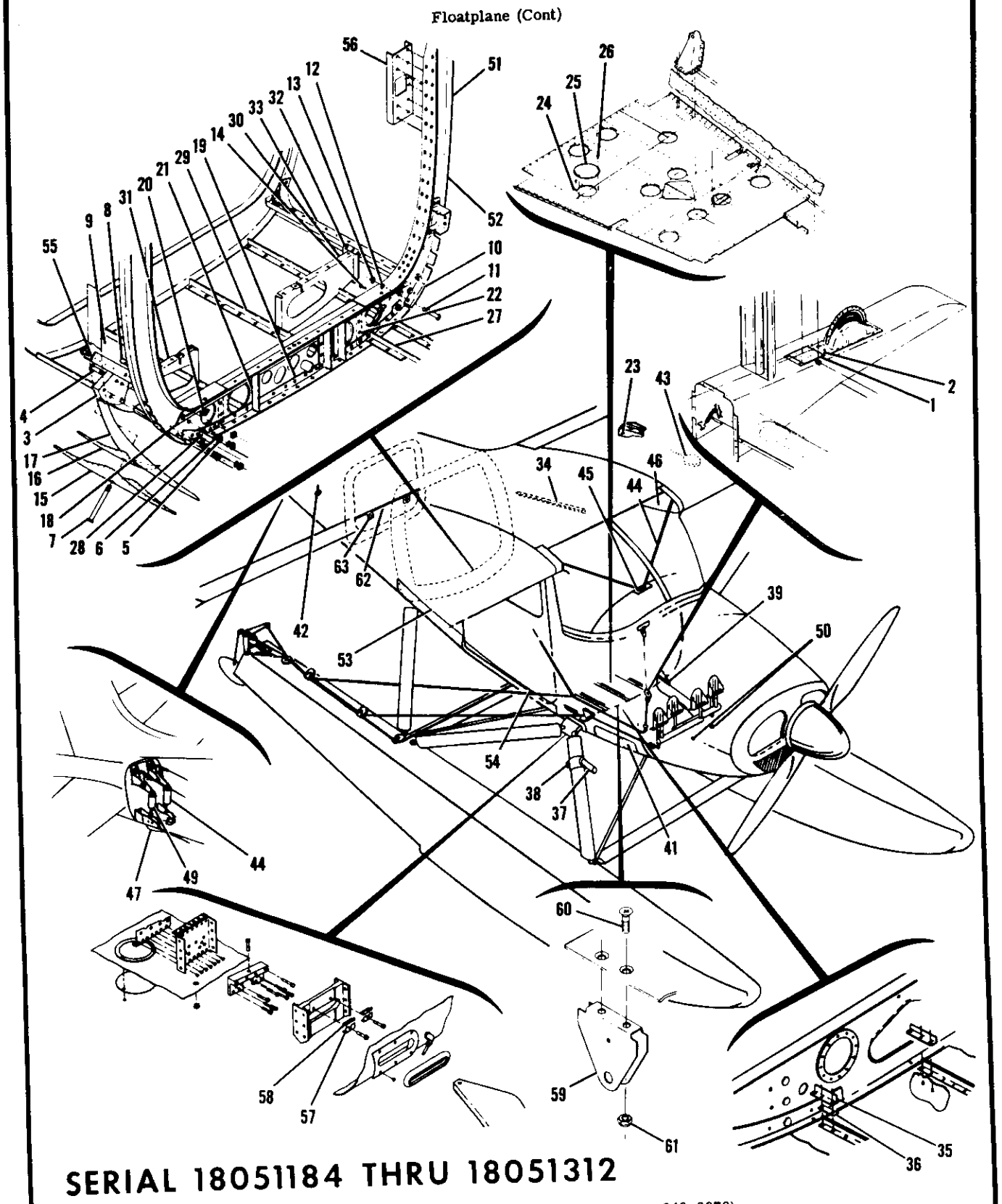

SERIAL 18051184 THRU 18051312

Figure 127. Floatplane Fittings (Edo No. 249-2870)

FIGURE AND INDEX NO.	PART NUMBER	DESCRIPTION 1 2 3 4 5 6 7	UNITS PER ASSY	USABLE ON CODE
127 -32	0742115-7	CLIP-BAGGAGE DOOR JAMB	1	
-33	0711101-20	JAMB-BAGGAGE DOOR LOWER	1	
-34	0742115-4	ANGLE	1	
-35	0742110-19	SPLICE-ANGLE	5	
-36	0742110-20	SHIM-SPLICE ANGLE	4	
-37	0541137-11	STEP ASSEMBLY	2	
		ATTACHING PARTS		
-38	AN3-7A	BOLT	2	
	AN960-10	WASHER	2	
	MS21044N3	NUT	2	
		---*---		
-39	AN837-4D	ELBOW-45 DEGREE	1	
	AN960D716L	WASHER	1	
	AN924-4D	NUT	1	
-40		DELETED, NOT PROCURABLE		
-41	0742116-2	REINFORCEMENT LH ONLY	1	
	0742116-3	REINFORCEMENT RH	1	
-42	0422344	EYEBOLT	1	
		ATTACHING PARTS		
	NAS679A5	NUT	1	
		---*---		
-43	0720004	DRAIN INSTALLATION-FUEL TANK FILLER NECK WELL	1	
	0742110-5	SEAL-FUSELAGE	2	
	0742110-6	PLATE-COVER SEAL	2	
	AN924-4	SEAL	6	
-44	0513003-19	BRACE ASSEMBLY	1	
		ATTACHING PARTS		
-45	0713156-1	DOUBLER	1	
	AN4-6A	BOLT	2	
	NAS679A4	NUT	2	
		---*---		
-46	0711133-1	SHIELD ASSY-LH	1	
	0711133-2	SHIELD ASSY-RH	1	
	0413235	GROMMET	1	
-47	0742115-44	FAIRING LH	1	
	0742115-45	FAIRING RH	1	
-48	0742119-1	SPRING & CABLE ASSEMBLY-FLOATPLANE	2	
		ATTACHING PARTS		
-49	AN23-11	BOLT	2	
	AN310-3	NUT	2	
	AN960-10	WASHER	2	
	MS24665-134	PIN-COTTER	2	
		---*---		
-50	0742373	STOP-COWL FLAP	2	
-51	0742115-37	SPLICE	2	
-52	0711112-5	BULKHEAD ASSY STA 90.0 WFU 0711112-11	1	
	0711112-11	BULKHEAD ASSY STA 90.0	1	
-53	0742117-4	DOUBLER-RH REAR	1	
	0742117-5	DOUBLER-LH REAR	1	
-54	0742117-2	DOUBLER-RH FORWARD	1	
	0742117-3	DOUBLER-LH FORWARD	1	
-55	0742115-18	ANGLE ASSEMBLY-RH	1	
	0742115-17	ANGLE ASSEMBLY-LH	1	
	0751001-25	MOUNT-ENGINE SEE FIGURE 77	1	
-56	0742115-15	REINFORCEMENT-BULKHEAD	1	
-57	0441115-3	WEDGE	4	
-58	0741007-1	SHIM	AR	
-59	0711059-1	BRACKET-PULLEY	2	
		ATTACHING PARTS		
-60	AN507-1032R8	SCREW	2	
-61	MS21044N3	NUT	2	
		---*---		
-62	0742109-1	ANGLE	1	
-63	0742108-1	PLATE	2	
	S1050-1-3.15	GROMMET	2	
		A---SERIAL 18051184 THRU 18051312		

Floatplane (Cont)

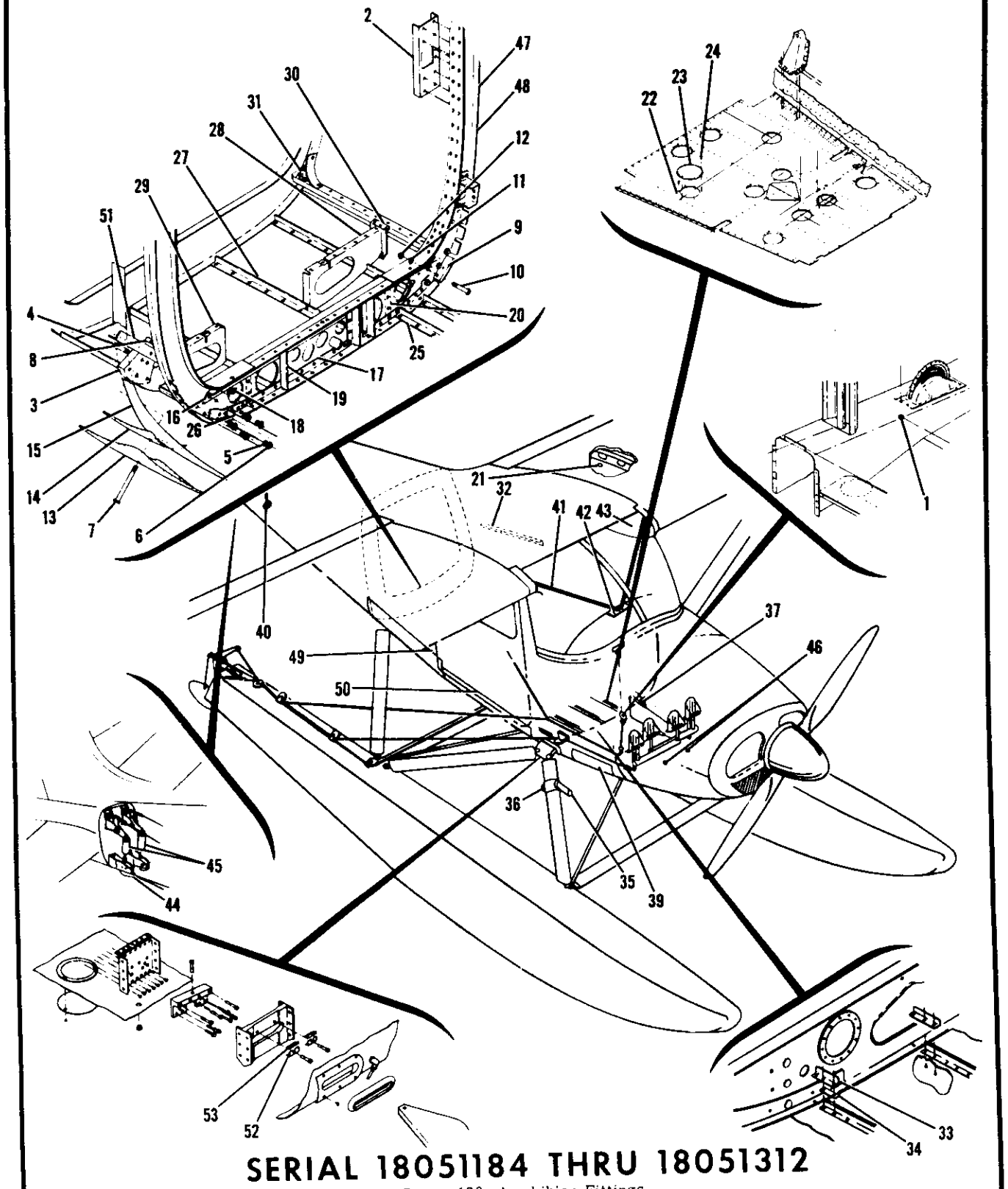

SERIAL 18051184 THRU 18051312

Figure 128. Amphibian Fittings

FIGURE AND INDEX NO.	PART NUMBER	DESCRIPTION 1 2 3 4 5 6 7	UNITS PER ASSY	USABLE ON CODE
128 -		AMPHIBIAN FITTINGS	NP.	A
- 1	S338-7	FAIRLEAD-RETRACT CABLE	1	
	S339-2	CLIP-FAIRLEAD RETAINING	1	
- 2	0742115-15	REINFORCEMENT-BULKHEAD LH ONLY	1	
- 3	0541129	BLOCK-STRUT ATTACHMENT AFT	2	
		ATTACHING PARTS		
- 4	AN4-12A	BOLT	5	
- 5	AN960-416	WASHER	5	
- 6	NAS679A4	NUT	5	
- 7	AN5-32A	BOLT	2	
- 8	22NA17A-054	NUTPLATE EN	2	
		---*---		
- 9	0541128	BLOCK-STRUT ATTACHMENT FORWARD	2	
		ATTACHING PARTS		
-10	AN5-15A	BOLT	2	
-11	AN960D516	WASHER	2	
-12	NAS679A4	NUT	2	
		---*---		
-13	0341118	DOUBLER-FUSELAGE RH	1	
	0341118-1	DOUBLER-FUSELAGE LH	1	
-14	0541126	SPACER-FUSELAGE SKIN LAP RH	1	
	0541126-1	SPACER-FUSELAGE SKIN LAP LH	1	
-15	0742115-51	PLATE-OUTER SPLICE RH	1	
	0742115-50	PLATE-OUTER SPLICE LH	1	
-16	0742115-16	ANGLE-REINFORCEMENT UPPER	1	
	0742115-19	ANGLE-REINFORCEMENT LOWER AFT	1	
-17	0742115-20	ANGLE-REINFORCEMENT FORWARD	1	
-18	NAS680A4	NUTPLATE	3	
-19	0742110-7	ANGLE-FORWARD SIDE	3	
-20	0742115-28	ANGLE-AFT SIDE	2	
-21	S349	GROMMET-DRAIN	10	
-22	S237-1	DOUBLER-INSPECTION OPENING	5	
-23	S225-1	COVER-INSPECTION OPENING	5	
		ATTACHING PARTS		
-24	49330	TRIMOUNT STUD UC	3	
		---*---		
-25	0742115-21	ANGLE-STIFFENER	1	
-26	0742115-22	ANGLE-STIFFENER	1	
-27	0710025-1	ANGLE-STIFFENER	2	
-28	0742115-5	BULKHEAD REINFORCEMENT LH	1	
-29	0742115-6	BULKHEAD REINFORCEMENT RH	1	
-30	0742115-7	CLIP-BAGGAGE DOOR JAMB	1	
-31	0711101-20	JAMB-BAGGAGE DOOR LOWER	1	
-32	0742115-4	ANGLE-FUSELAGE SIDE STIFFENER	4	
-33	0742110-19	SPLICE-ANGLE	5	
-34	0742110-20	SHIM-SPLICE ANGLE	4	
-35	0541137-11	STEP ASSEMBLY	2	
		ATTACHING PARTS		
-36	AN3-7A	BOLT	2	
	AN960-10	WASHER	2	
	MS21044N3	NUT	2	
		---*---		
-37	AN837-4D	ELBOW-45 DEGREES	1	
	AN960D716L	WASHER	1	
	AN924-4D	NUT	1	
-38		DELETED, NOT PROCURABLE		
-39	0742116-2	REINFORCEMENT-LH	1	
	0742116-3	REINFORCEMENT-RH	1	
-40	0422349	EYEBOLT	1	
		ATTACHING PARTS		
	NAS679A5	NUT	1	
		---*---		

CONTINUED ON NEXT PAGE

FIGURE AND INDEX NO.	PART NUMBER	DESCRIPTION 1 2 3 4 5 6 7	UNITS PER ASSY	USABLE ON CODE
128 -41	0513003-6	BRACE ASSEMBLY	1	
		ATTACHING PARTS		
-42	0713156-1	DOUBLER	1	
	AN4-6A	BOLT	2	
	NAS679A4	NUT	2	
		---*---		
-43	0511311-11	SHIELD ASSEMBLY LH	1	
	0511311-12	SHIELD ASSEMBLY RH	1	
	0413235	GROMMET	1	
-44	0742115-44	FAIRING LH	1	
	0742115-45	FAIRING RH	1	
-45	0742119-1	SPRING & CABLE ASSEMBLY-FLOATPLANE	2	
		ATTACHING PARTS		
	AN23-11	BOLT	2	
	AN310-3	NUT	2	
	AN960-10	WASHER	2	
	MS24665-134	PIN-COTTER	2	
		---*---		
-46	0742373	STOP-COWL FLAP	2	
-47	0742115-37	SPLICE	1	
-48	0711112-5	BULKHEAD ASSEMBLY STA 90.0 WEU 0711112-11	1	
	0711112-11	BULKHEAD ASSEMBLY STA 90.0	1	
-49	0742117-4	DOUBLER-RH REAR	1	
	0742117-5	DOUBLER-LH REAR	1	
-50	0742117-2	DOUBLER-RH FORWARD	1	
	0742117-3	DOUBLER-LH FORWARD	1	
-51	0742115-18	ANGLE ASSEMBLY RH	1	
	0742115-17	ANGLE ASSEMBLY LH	1	
	0751001-25	MOUNT-ENGINE SEE FIGURE 77	1	
	0411086-17	INDICATOR-AIRSPEED WHEN EXHAUSTED USE S-1324N2	1	
	0411086-23	INDICATOR-AIRSPEED-ALT-WHEN EXHAUSTED USE S-1324N2	1	
	S1324N2	INDICATOR-AIRSPEED	4	
-52	0441115-3	WEDGE	AR	
-53	0741007-1	SHIM	1	
	36837	BALLAST-BULKHEAD STA 230.187	4	
		ATTACHING PARTS		
	AN520-10R72	SCREW	4	
	AN970-3	WASHER	4	
	MS21044N3	NUT		
		---*---		
		A---SERIAL 18051184 THRU 18051312		

FIGURE AND INDEX NO.	PART NUMBER	DESCRIPTION 1 2 3 4 5 6 7	UNITS PER ASSY	USABLE ON CODE
129 -		CARGO PACK INSTALLATION	NP	C
- 1	0700067-2	CARGO PACK ASSEMBLY	1	
	0700067-43	CARGO PACK ASSEMBLY FLOATPLANE	1	
		ATTACHING PARTS		
- 2	NAS221-13	SCREW	32	
- 3	AN936B10	WASHER	32	
- 4	AN960-10L	WASHER	32	
	S10K140	RIVNUT	28	
	S10K230	RIVNUT	2	
	NAS697A3	NUTPLATE	2	
- 5	S1042-1-275	SEAL	AR	
		---•---		
- 6	0700067-3	DOOR ASSEMBLY-SIDE	1	A
	0700067-45	DOOR ASSEMBLY-SIDE	1	B
- 7	0713229-1	PLACARD	1	
- 8	WL98293-2-.190	STUD-AIRLOC	5	A
	4002-4	STUD-CAMLOC	3	B
		ATTACHING PARTS		
	S1853-4	PIN	1	A
	4002G	GROMMET-CAMLOC	1	B
		---•---		
	0413323-6	LOCK ASSEMBLY-DOOR WHEN EXHAUSTED	1	B
		USE C253001-0101 LOCK & 0413322-4 CAM		
	C253001-0101	LOCK ASSEMBLY-DOOR	1	
	0413322-4	CAM-DOOR LOCK	1	
- 8A	S1082-1	SEAL-70.0 IN LG BULK ITEM REF S1082-1-70.00	1	
	S1853-1	RECEPTACLE	8	A
- 9	0700067-23	HINGE ASSEMBLY	1	
	0700067-26	HINGE HALF-UPPER	1	
	0700067-25	HINGE HALF-LOWER	1	
	0700067-29	PIN-HINGE	1	
-10	0700067-4	DOOR ASSEMBLY-REAR	1	A
	0700067-51	DOOR ASSEMBLY-REAR	1	B
-11	0813503-8	KNOB	2	
		ATTACHING PARTS		
	AN515-8R8	SCREW	1	
	AN960-8	WASHER	1	
		---•---		
-12	S1082-1-62	SEAL	AR	A
	S1055-1-62	SEAL	AR	B
-13	S1853-1	RECEPTACLE	2	A
	4002-244-16	RECEPTACLE-CALMOC	2	B
-14	0700067-24	HINGE ASSEMBLY	1	
	0700067-27	HINGE HALF UPPER	1	
	0700067-28	HINGE HALF LOWER	1	
	0700067-30	PIN-HINGE	1	
-15	0700067-35	DOOR ASSEMBLY-REAR FLOATPLANE ONLY	1	
-16	S1082-1-18	SEAL-UPPER FLOATPLANE ONLY	2	
-17	S1082-1-26	SEAL-LOWER FLOATPLANE ONLY	1	
-18	0700067-41	DOOR HALF LOWER FLOATPLANE ONLY	1	
-19	0700067-38	REINFORCEMENT ASSEMBLY	1	
-20	0700067-31	HINGE ASSEMBLY	1	
	0700067-32	HINGE HALF	1	
	0700067-33	HINGE HALF	1	
	0700067-34	PIN-HINGE	1	
-21	S1853-1	RECEPTACLE	2	
-22	0813503-8	KNOB	2	
		ATTACHING PARTS		
	AN515-8R8	SCREW	1	
	AN960-8	WASHER	1	
		---•---		
-23	0700067-42	DOOR HALF UPPER FLOATPLANE ONLY	1	
-24	0700067-37	REINFORCEMENT	1	
	WL98293-2-.200	STUD-AIRLOC	2	
		ATTACHING PARTS		
	S1853-4	PIN	1	
	AN960-8L	WASHER	1	
		---•---		

CONTINUED ON NEXT PAGE

Cargo Pod

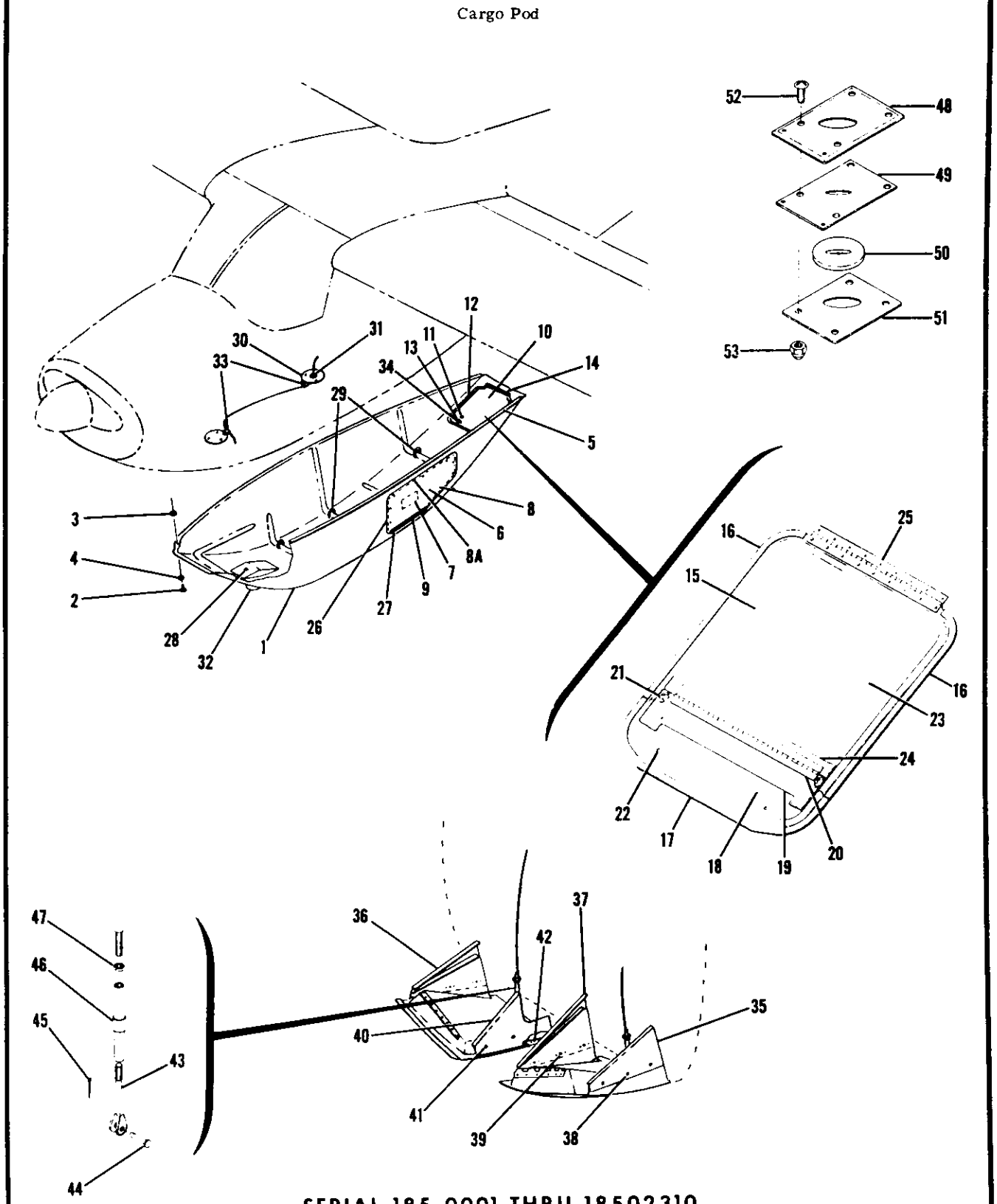

SERIAL 185-0001 THRU 18502310

Figure 129. Cargo Pod Installation

FIGURE AND INDEX NO.	PART NUMBER	DESCRIPTION 1 2 3 4 5 6 7	UNITS PER ASSY	USABLE ON CODE
129 -25	0700067-24	HINGE ASSEMBLY	1	
	0700067-27	HINGE HALF UPPER	1	
	0700067-28	HINGE HALF LOWER	1	
	0700067-30	PIN-HINGE	1	
-26	S202R8	SEAL-SIDE DOOR	AR	
-27	0700067-22	DOUBLER	1	
	0700083-1	ANGLE	1	
-28	MS35489-9	GROMMET	1	
-29	0700069-1	LUG-CARGO TIE DOWN	6	
		ATTACHING PARTS		
	AN3-14A	BOLT	1	
	AN960-10L	WASHER	2	
	MS21044N3	NUT	1	
		---*---		
-30	0713230-1	COVER PLATE ASSEMBLY	1	
-31	MS35489-33	GROMMET	1	
-32	AN515-6R8	SCREW	5	
	NAS680A06	NUTPLATE	5	
-33	S1155-2	CLAMP	2	
-34	WL98293-3-.310	STUD-AIRLOC	2	
		COWL FLAP EXTENSIONS INSTALLATION	NP	
-35	0752036-2	BAFFLE-OUTBOARD LH FLAP	1	
-36	0752036-3	BAFFLE-OUTBOARD RH FLAP	1	
-37	0752036-4	BAFFLE-INBOARD LH FLAP	1	
		ATTACHING PARTS		
-38	AN520-10R8	SCREW	3	
-39	MS20365-1032C	NUT	3	
		---*---		
-40	0752036-6	BAFFLE ASSEMBLY-INBOARD RH FLAP	1	
		ATTACHING PARTS		
-41	AN520-10R8	SCREW	3	
	MS20365-1032	NUT	2	
		---*---		
-42	NAS697-A3	NUTPLATE	1	
-43	AN161-22LL	FORK	2	
		ATTACHING PARTS		
-44	MS20392-2C13	PIN-FLATHEAD	1	
-45	MS24665-132	PIN-COTTER	1	
		---*---		
-46	AN155B32S	BARREL	2	
-47	AN316-4	NUT	2	
		SEAL INSTALLATION-FLOATPLANE CARGO PACK	NP	
-48	0700072-3	PLATE-LOWER FORWARD RH & LOWER AFT LH	2	
	0700072-4	PLATE-LOWER FORWARD LH & LOWER AFT RH	2	
-49	0700072-5	SEAL	4	
-50	0700072-6	SEAL	4	
-51	0700072-7	PLATE	4	
		ATTACHING PARTS		
-52	AN520-10R8	SCREW	4	
-53	22NKM-02	NUT EN	4	
		---*---		
		A---SERIAL 185-0001 THRU 185-0274		
		B---SERIAL 185-0275 THRU 18502310		
		C---SERIAL 185-0001 THRU 18502310		

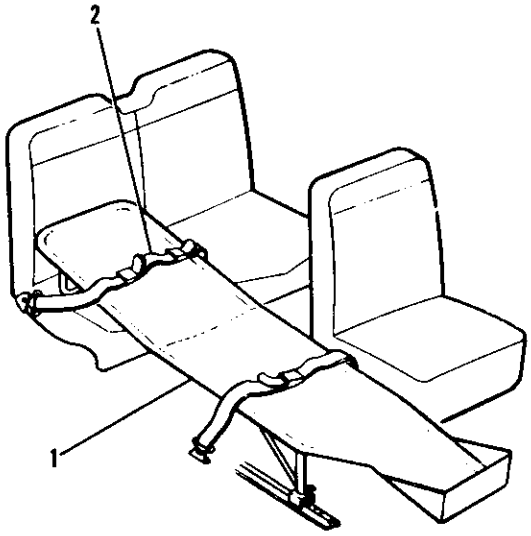

Figure 130. Stretcher Installation

FIGURE AND INDEX NO.	PART NUMBER	DESCRIPTION 1 2 3 4 5 6 7	UNITS PER ASSY	USABLE ON CODE
130 -		STRETCHER INSTALLATION ----------	NP	
- 1	0700164-6	STRETCHER ASSEMBLY ----------	1	
- 2	FDC2475-50	BELT-EXTENSION ----------	1	A
	S1809-1	BELT-EXTENSION ----------	1	B
		A---SERIAL 18051184 THRU 18051875		
		SERIAL 185-0001 THRU 185-1300		
		B---SERIAL 18051876 THRU 18052384		
		SERIAL 185-1301 THRU 18502310		

FIGURE AND INDEX NO.	PART NUMBER	DESCRIPTION 1 2 3 4 5 6 7	UNITS PER ASSY	USABLE ON CODE
131 -		CENTER-LINE CAMERA PROVISIONS INSTALLATION	NP	A
- 1	0710001-23	BRACKET ASSEMBLY-SHAFT INBOARD	1	
- 2	0761210-1	SPROCKET	1	
		ATTACHING PARTS		
- 3	0761205-3	PIN WHEN EXHAUSTED USE NAS561-3-8	1	B
	NAS561-3-8	ROLL PIN	1	C
		---*---		
- 4	0710001-16	BRACKET ASSEMBLY-SHAFT	1	
		ATTACHING PARTS		
	AN507-632R10	SCREW	4	
	NAS679A06	NUT	4	
		---*---		
- 5	0710001-25	SPROCKET GUARD	1	
		ATTACHING PARTS		
	AN507-632R8	SCREW	1	
	NAS679A06	NUT	1	
		---*---		
- 6	0710001-17	SHAFT	1	
- 7	0710001-3	BRACKET-RUDDER FORWARD RIGHT	1	
- 8	0710001-62	BRACKET-PULLEY	4	
- 9	0710001-5	BRACKET-RUDDER & ELEVATOR LEFT	1	
-10	0710001-6	BRACKET-RUDDER & ELEVATOR RIGHT	1	
-11	0710001-54	BRACKET-RUDDER AFT LEFT	1	
-12	0710001-8	BRACKET-ELEVATOR AFT	1	
-12A	MS20220-1	PULLEY REPLACES MS20220-2 ON AIRPLANES THAT USE 2 PULLEYS ON INDEXED ITEM 16	1	
-13	MS20220-2	PULLEY	3	
		ATTACHING PARTS		
	AN5-11A	BOLT	4	
	NAS679A5	NUT	4	
	AN960-516L	WASHER	4	
	MS24665-136	PIN-COTTER CABLE GUARD	4	
	MS20392-3C55	PIN-FLATHEAD	4	
	MS24665-132	PIN-COTTER	4	
		---*---		
-14	AN44-4A	BOLT-EYE	16	
		ATTACHING PARTS		
	NAS679A5	NUT	1	
	AN960-516L	WASHER	1	
		---*---		
-15	0710001-1	BRACKET-STABILIZER AFT	1	
-16	0710001-10	BRACKET-STABILIZER FORWARD	1	
-17	0710001-19	BRACKET-PULLEY	2	
	S378-1L	PULLEY	4	
		ATTACHING PARTS		
	AN3-10A	BOLT	2	
	MS21044N3	NUT	2	
	AN960-416	WASHER	2	
	MS24665-132	PIN-COTTER	2	
	MS24665-136	PIN-COTTER CABLE GUARD	2	
	MS20392-3C47	PIN-FLAT HEAD	2	
		---*---		
-18	AN44-4A	BOLT-EYE	4	
-19	0710001-46	BOLT-EYE	1	
		ATTACHING PARTS		
	NAS679A5	NUT	1	
	AN960-516L	WASHER	1	
		---*---		
-19A	0710001-46	BOLT-EYE	1	F
	AN44-10A	BOLT-EYE	2	C
		ATTACHING PARTS		
	NAS679A5	NUT	1	
	AN960-516L	WASHER	1	
	0710001-46	SPACER	1	G
		---*---		

CONTINUED ON NEXT PAGE

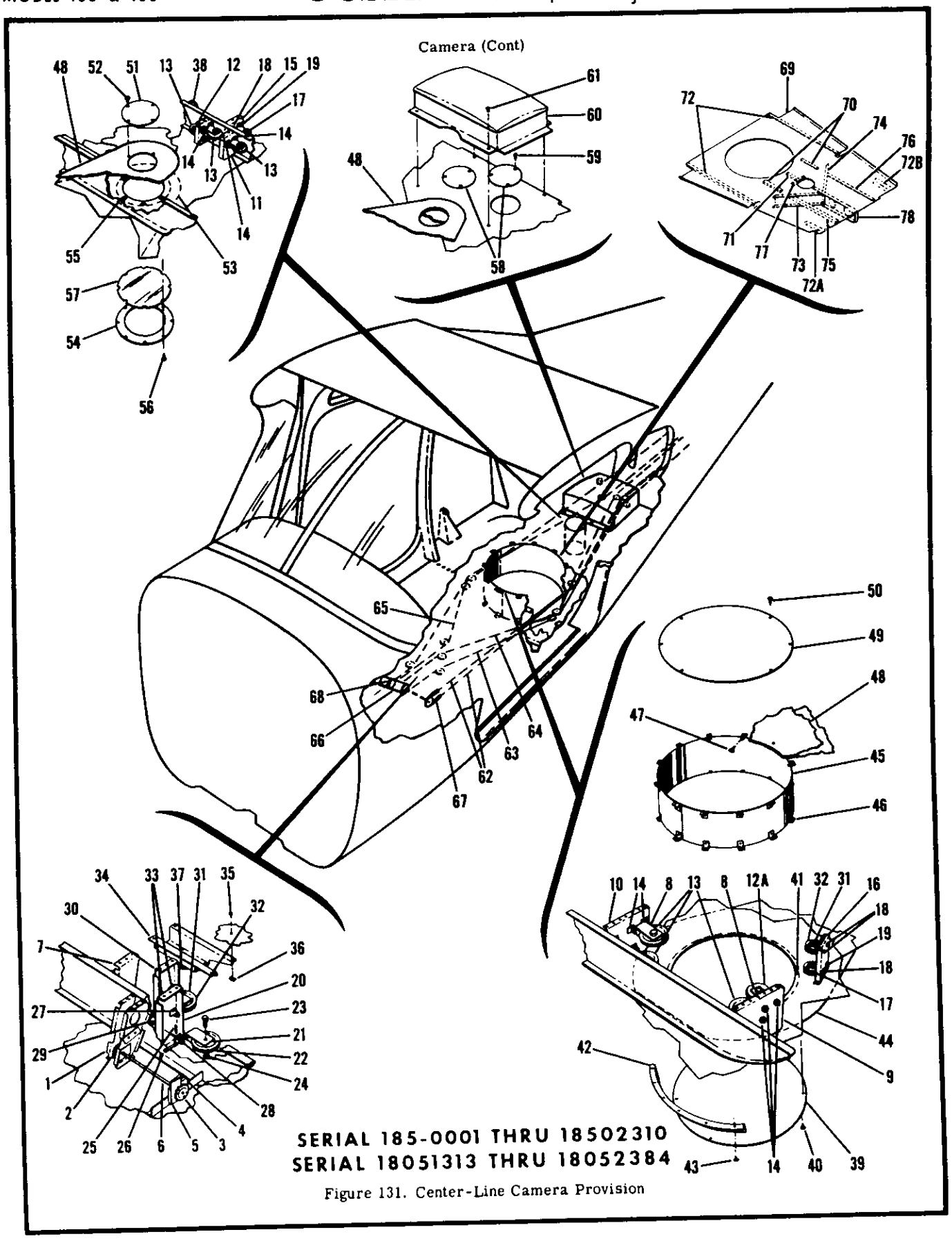

Figure 131. Center-Line Camera Provision

FIGURE AND INDEX NO.	PART NUMBER	DESCRIPTION 1 2 3 4 5 6 7	UNITS PER ASSY	USABLE ON CODE
131 -20	0710001-2	BRACKET-RUDDER FORWARD LEFT	1	
-21	0710001-62	BRACKET-PULLEY	1	
-22	MS20220-2	PULLEY	1	
		ATTACHING PARTS		
-23	AN5-11A	BOLT	1	
-24	NAS679A5	NUT	1	
	AN960-516L	WASHER	1	
	MS24665-132	PIN-COTTER	1	
-25	MS24665-136	PIN-COTTER CABLE GUARD	1	
-26	MS20392-3C55	PIN-FLAT HEAD	1	
		---*---		
-27	AN44-4A	BOLT-EYE	1	
-28	0710001-46	BOLT-EYE	1	
		ATTACHING PARTS		
-29	NAS679A5	NUT	1	
	AN960-516L	WASHER	1	
		---*---		
-30	0710001-4	BRACKET-ELEVATOR FORWARD LOWER	1	
-31	0710001-20	BRACKET-PULLEY	2	
-32	S378-3	PULLEY	2	
		ATTACHING PARTS		
	AN4-7A	BOLT	1	
	NAS679A4	NUT	1	
	AN960-416	WASHER	1	
	MS24665-132	PIN-COTTER	1	
	MS24665-136	PIN-COTTER CABLE GUARD	1	
	MS20392-3C55	PIN-FLAT HEAD	1	
		---*---		
-33	0710001-46	BOLT-EYE	2	
		ATTACHING PARTS		
	NAS679A5	NUT	1	
	AN960-516L	WASHER	1	
		---*---		
-34	0710001-26	BRACKET ASSEMBLY-ELEVATOR FORWARD UP CABLE	1	
		ATTACHING PARTS		
-35	AN515-8R9	SCREW	4	
-36	NAS679A08	NUT	4	
		---*---		
	0710001-26	BRACKET-FAIRLEAD	1	
-37	MS20220-2	PULLEY	1	
		ATTACHING PARTS		
	AN5-11A	BOLT	1	
	NAS679A5	NUT	1	
	AN960D516L	WASHER	1	
	MS24665-136	PIN-COTTER	1	
		---*---		
-38	S378-3	PULLEY	1	
		ATTACHING PARTS		
	AN4-10A	BOLT	1	
	NAS679A4	NUT	1	
		---*---		
-39	0710001-14	COVER PLATE-FUSELAGE	1	D
	0710001-73	COVER PLATE-FUSELAGE	1	E
		ATTACHING PARTS		
-40	S1021ZR-8	SCREW	8	D
	S1021Z8-6	SCREW	12	E
-41	S1863-3	NUTPLATE	8	D
	S1863-3	NUTPLATE	12	E
		---*---		
-42	0710001-42	DEFLECTOR-GAS	1	
		ATTACHING PARTS		
-43	S1021Z8-8	SCREW	6	
	NAS444-4	NUTPLATE	6	
		---*---		
-44	0710001-13	DOUBLER-FUSELAGE	1	D
	0710001-72	DOUBLER-FUSELAGE	1	E
		ATTACHING PARTS		
-45	0710001-15	BULKHEAD-CIRCULAR	1	
-46	0710001-45	ANGLE ASSEMBLY	24	
	NAS680A08	NUTPLATE	1	
-47	NAS220-8	SCREW	24	
		---*---		
-48	0710001-12	DOUBLER-FLOORBOARD	1	

CONTINUED ON NEXT PAGE

FIGURE AND INDEX NO.	PART NUMBER	DESCRIPTION 1 2 3 4 5 6 7	UNITS PER ASSY	USABLE ON CODE
131 -49	0710001-11	COVER PLATE-FLOORBOARD	1	
		ATTACHING PARTS		
	NAS680A3	NUT	4	
-50	AN520-10R9	SCREW	4	
		---*---		
-51	0710001-34	COVER PLATE-VIEW FINDER FLOORBOARD	1	
		ATTACHING PARTS		
	NAS680A06	NUT	4	
-52	AN515-6R5	SCREW	4	
		---*---		
-53	0710001-30	DOUBLER-VIEW FINDER LOWER	1	
-54	0710001-31	RING-RETAINER	1	
		ATTACHING PARTS		
-55	NAS444-4	NUT	8	
-56	S1021Z8-8	SCREW	8	
		---*---		
-57	0710001-32	WINDOW-VIEW FINDER PLEXIGLASS	1	
-58	S225-1	PLATE-INSPECTION COVER	2	
		ATTACHING PARTS		
-59	49330	STUD-TRI-MOUNT UC	3	
		---*---		
-60	0710001-36	SEAT ASSEMBLY-CAMERA	1	
		ATTACHING PARTS		
-61	AN520-10R9	SCREW	4	
	NAS680A3	NUTPLATE	4	
		---*---		
-62	0510105-28	CABLE-STABILIZER TRIM	2	
-63	0510105-167	CABLE-RUDDER LEFT	1	
	0510105-168	CABLE-RUDDER RIGHT	1	
-64	0510105-132	CABLE-ELEVATOR LOWER	1	
-65	0510105-131	CABLE-ELEVATOR UPPER	1	
-66	0432138-5	CHAIN-STABILIZER	1	
-67	0432138-4	CHAIN-STABILIZER	1	
-68	0432134-4	SPROCKET-IDLER	1	
		ATTACHING PARTS		
	AN3-62A	BOLT	1	
	NAS43HT3-256	SPACER	1	
	NAS43HT3-92	SPACER	1	
	MS21044N3	NUT	1	
		---*---		
-69	0710001-64	FLOORBOARD ASSEMBLY	1	
-70	0710001-50	STIFFENER	2	
-71	0710001-51	STIFFENER	1	
-72	0512107-12	STIFFENER	2	
-72A	0713942-1	SUPPORT ASSEMBLY-LH	1	
-72B	0713942-2	SUPPORT ASSEMBLY-RH	1	
		ATTACHING PARTS		
	AN515-8R8	SCREW	2	
		---*---		
-73	0710001-56	BULKHEAD-LH	1	
-74	0710001-57	BULKHEAD-RH	1	
-75	0710001-58	ANGLE-LH	1	
-76	0710001-59	ANGLE-RH	1	
-77	0710001-60	ANGLE-BULKHEAD	1	F
	0710001-74	ANGLE-BULKHEAD	1	G
-78	0710001-61	BULKHEAD	1	
		A---SERIAL 185-0001 THRU 18502310		
		SERIAL 18051313 THRU 18052384		
		B---SERIAL 185-0001 THRU 18501604		
		SERIAL 18051313 THRU 18052104		
		C---SERIAL 18501605 THRU 18502310		
		SERIAL 18052105 THRU 18052384		
		D---SERIAL 185-0001 THRU 18501643		
		SERIAL 18051313 THRU 18052121		
		E---SERIAL 18501644 THRU 18502310		
		SERIAL 18052122 THRU 18052384		
		F---SERIAL 185-0001 THRU 18501832		
		SERIAL 18051313 THRU 18052175		
		G---SERIAL 18501833 THRU 18502310		
		SERIAL 18052176 THRU 18052384		

FIGURE AND INDEX NO.	PART NUMBER	DESCRIPTION 1 2 3 4 5 6 7	UNITS PER ASSY	USABLE ON CODE
132 -		CENTER-LINE CAMERA PROVISIONS INSTALLATION	NP	A
- 1	0710001-23	BRACKET ASSEMBLY-SHAFT INBOARD	1	
- 2	0761210-1	SPROCKET	1	
		ATTACHING PARTS		
- 3	0761205-3	PIN WHEN EXHAUSTED USE NAS561-3-8	1	
	NAS561-3-8	ROLL PIN	1	
		---*---		
- 4	0710001-16	BRACKET ASSEMBLY-SHAFT	1	
		ATTACHING PARTS		
	AN507-632R10	SCREW	4	
	NAS679A06	NUT	4	
		---*---		
- 5	0710001-25	SPROCKET GUARD	1	
		ATTACHING PARTS		
	AN507-632R8	SCREW	1	
	NAS679A06	NUT	1	
		---*---		
- 6	0710001-17	SHAFT	1	
- 7	0710001-3	BRACKET-RUDDER FORWARD RIGHT	1	
- 8	0710001-62	BRACKET-PULLEY	4	
- 9	0710001-5	BRACKET-RUDDER & ELEVATOR LEFT	1	
-10	0710001-6	BRACKET-RUDDER & ELEVATOR RIGHT	1	
-11	0710001-54	BRACKET-RUDDER AFT LEFT	1	
-12	0710001-8	BRACKET-ELEVATOR AFT	1	
-13	MS20220-2	PULLEY	4	
		ATTACHING PARTS		
	AN5-11A	BOLT	4	
	NAS679A5	NUT	4	
	AN960-516L	WASHER	4	
	MS24665-136	PIN-COTTER	4	
	MS20392-3C55	PIN-FLAT HEAD	4	
	MS24665-132	PIN-COTTER	4	
		---*---		
-14	AN44-4A	BOLT-EYE	16	
		ATTACHING PARTS		
	NAS679A5	NUT	1	
	AN960-516L	WASHER	1	
		---*---		
-15	0710001-1	BRACKET-STABILIZER AFT	1	
-16	0710001-10	BRACKET-STABILIZER FORWARD	1	
-17	0710001-19	BRACKET-PULLEY	2	
	S378-1L	PULLEY	4	
		ATTACHING PARTS		
	AN3-10A	BOLT	2	
	MS21044N3	NUT	2	
	AN960-416	WASHER	2	
	MS24665-132	PIN-COTTER	2	
	MS24665-136	PIN-COTTER CABLE GUARD	2	
	MS20392-3C47	PIN-FLAT HEAD	2	
		---*---		
-18	AN44-4A	BOLT-EYE	2	
-19	0710001-46	BOLT-EYE	2	
		ATTACHING PARTS		
	NAS679A5	NUT	1	
	AN960-516L	WASHER	1	
		---*---		

CONTINUED ON NEXT PAGE

Camera (Cont)

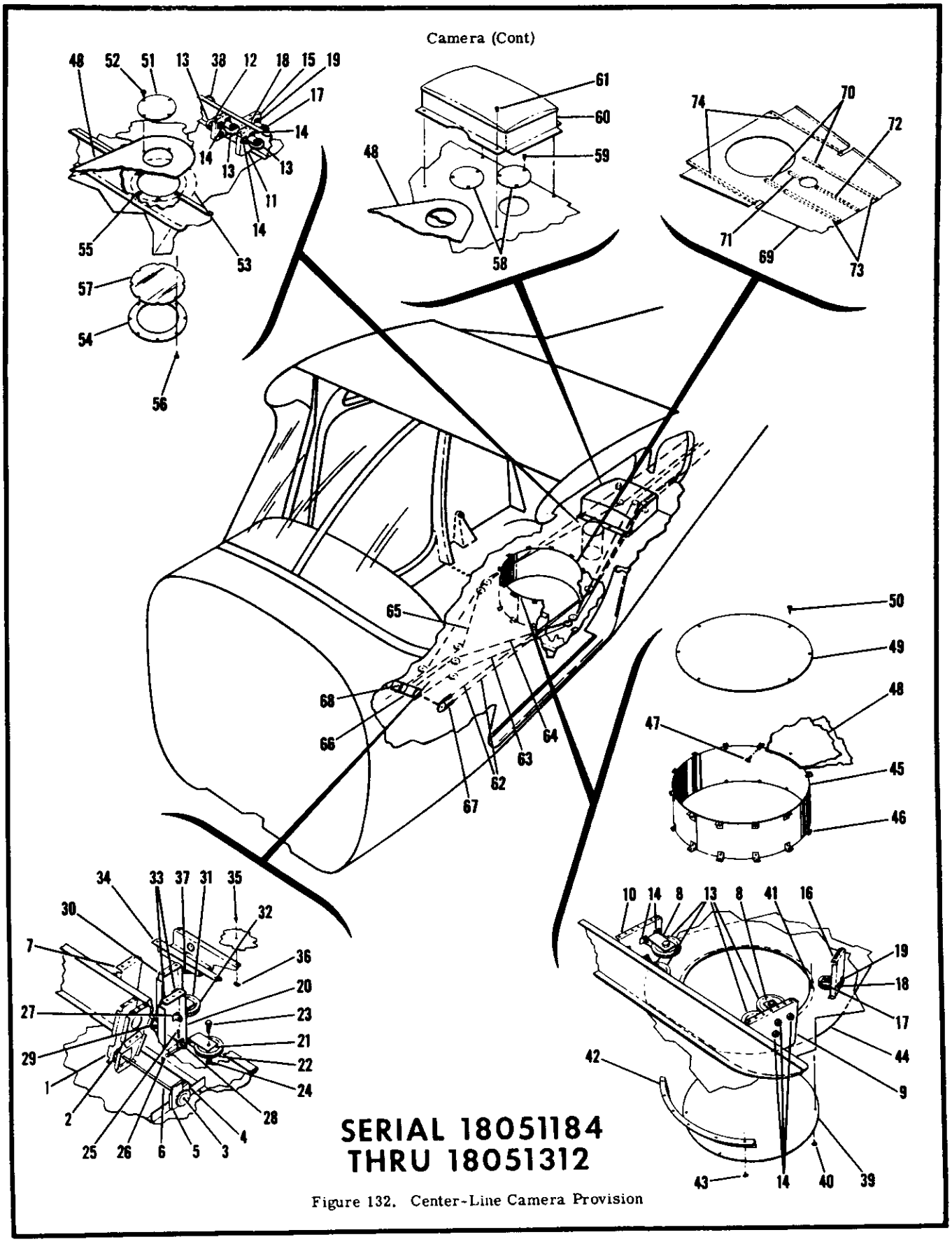

Figure 132. Center-Line Camera Provision

FIGURE AND INDEX NO.	PART NUMBER	DESCRIPTION 1 2 3 4 5 6 7	UNITS PER ASSY	USABLE ON CODE
132 -20	0710001-2	BRACKET-RUDDER FORWARD LEFT	1	
-21	0710001-62	BRACKET-PULLEY	1	
-22	MS20220-2	PULLEY	1	
		ATTACHING PARTS		
-23	AN5-11A	BOLT	1	
-24	NAS679A5	NUT	1	
	AN960-516L	WASHER	1	
	MS24665-132	PIN-COTTER	1	
-25	MS24665-136	PIN-COTTER CABLE GUARD	1	
-26	MS20392-3C55	PIN-FLAT HEAD	1	
		---*---		
-27	AN44-4A	BOLT-EYE	1	
-28	0710001-46	BOLT-EYE	1	
		ATTACHING PARTS		
-29	NAS679A5	NUT	1	
	AN960-516L	WASHER	1	
		---*---		
-30	0710001-4	BRACKET-ELEVATOR FORWARD LOWER	1	
-31	0710001-20	BRACKET-PULLEY	1	
-32	S378-3	PULLEY	1	
		ATTACHING PARTS		
	AN4-7A	BOLT	1	
	NAS679A4	NUT	1	
	AN960-416	WASHER	1	
	MS24665-132	PIN-COTTER	1	
	MS24665-136	PIN-COTTER CABLE GUARD	1	
	MS20392-3C55	PIN-FLATHEAD	1	
		---*---		
-33	0710001-46	BOLT-EYE	2	
		ATTACHING PARTS		
	NAS679A5	NUT	1	
	AN960-516L	WASHER	1	
		---*---		
-34	0710001-26	BRACKET ASSEMBLY-ELEVATOR FORWARD UP CABLE	1	
		ATTACHING PARTS		
-35	AN515-8R9	SCREW	4	
-36	NAS679A08	NUT	4	
		---*---		
	0710001-26	BRACKET-FAIRLEAD	1	
-37	MS20220-2	PULLEY	1	
		ATTACHING PARTS		
	AN5-11A	BOLT	1	
	NAS679A5	NUT	1	
	AN960D516L	WASHER	1	
	MS24665-136	PIN-COTTER	1	
		---*---		
-38	S378-3	PULLEY	1	
		ATTACHING PARTS		
	AN4-10A	BOLT	1	
	NAS679A4	NUT	1	
		---*---		
-39	0710001-14	COVER PLATE-FUSELAGE	1	
		ATTACHING PARTS		
-40	S1021Z8-8	SCREW	8	
-41	NAS444-4	NUTPLATE	8	
		---*---		
-42	0710001-42	DEFLECTOR-GAS	1	
		ATTACHING PARTS		
-43	S1021Z8-8	SCREW	6	
	NAS444-4	NUTPLATE	6	
		---*---		
-44	0710001-13	DOUBLER-FUSELAGE	1	
		ATTACHING PARTS		
-45	0710001-15	BULKHEAD-CIRCULAR	1	
-46	0710001-45	ANGLE ASSEMBLY	24	
	NAS680A08	NUTPLATE	1	
-47	NAS220-8	SCREW	24	
		---*---		

CONTINUED ON NEXT PAGE

FIGURE AND INDEX NO.	PART NUMBER	DESCRIPTION 1 2 3 4 5 6 7	UNITS PER ASSY	USABLE ON CODE
132 -48	0710001-12	DOUBLER-FLOORBOARD	1	
-49	0710001-11	COVER PLATE-FLOORBOARD	1	
		ATTACHING PARTS		
	NAS680A3	NUT	4	
-50	AN520-10R9	SCREW	4	
		---*---		
-51	0710001-34	COVER PLATE-VIEW FINDER FLOORBOARD	1	
		ATTACHING PARTS		
	NAS680A06	NUT	4	
-52	AN515-6R5	SCREW	4	
		---*---		
-53	0710001-30	DOUBLER-VIEW FINDER LOWER	1	
-54	0710001-31	RING-RETAINER	1	
		ATTACHING PARTS		
-55	NAS444-4	NUT	8	
-56	S1021Z8-8	SCREW	8	
		---*---		
-57	0710001-32	WINDOW-VIEW FINDER PLEXIGLASS	1	
-58	S225-1	PLATE-INSPECTION COVER	2	
		ATTACHING PARTS		
-59	49330	STUD-TRI-MOUNT UC	3	
		---*---		
-60	0710001-36	SEAT ASSEMBLY-CAMERA	1	
		ATTACHING PARTS		
-61	AN520-10R9	SCREW	4	
	NAS680A3	NUTPLATE	4	
		---*---		
-62	0510105-28	CABLE-STABILIZER TRIM	2	
-63	0510105-167	CABLE-RUDDER LEFT	1	
	0510105-168	CABLE-RUDDER RIGHT	1	
-64	0510105-132	CABLE-ELEVATOR LOWER	1	
-65	0510105-131	CABLE-ELEVATOR UPPER	1	
-66	0432138-5	CHAIN-STABILIZER	1	
-67	0432138-4	CHAIN-STABILIZER	1	
-68	0432134-4	SPROCKET-IDLER	1	
		ATTACHING PARTS		
	AN3-62A	BOLT	1	
	NAS43HT3-256	SPACER	1	
	NAS43HT3-92	SPACER	1	
	MS21044N3	NUT	1	
		---*---		
-69	0710001-49	FLOORBOARD ASSEMBLY	1	
-70	0710001-50	STIFFENER	2	
-71	0710001-51	STIFFENER	1	
-72	0710001-52	STIFFENER	1	
-73	0512107-30	STIFFENER	2	
-74	0512107-12	STIFFENER	2	
		A---SERIAL 18051184 THRU 18051312		

Camera (Cont)

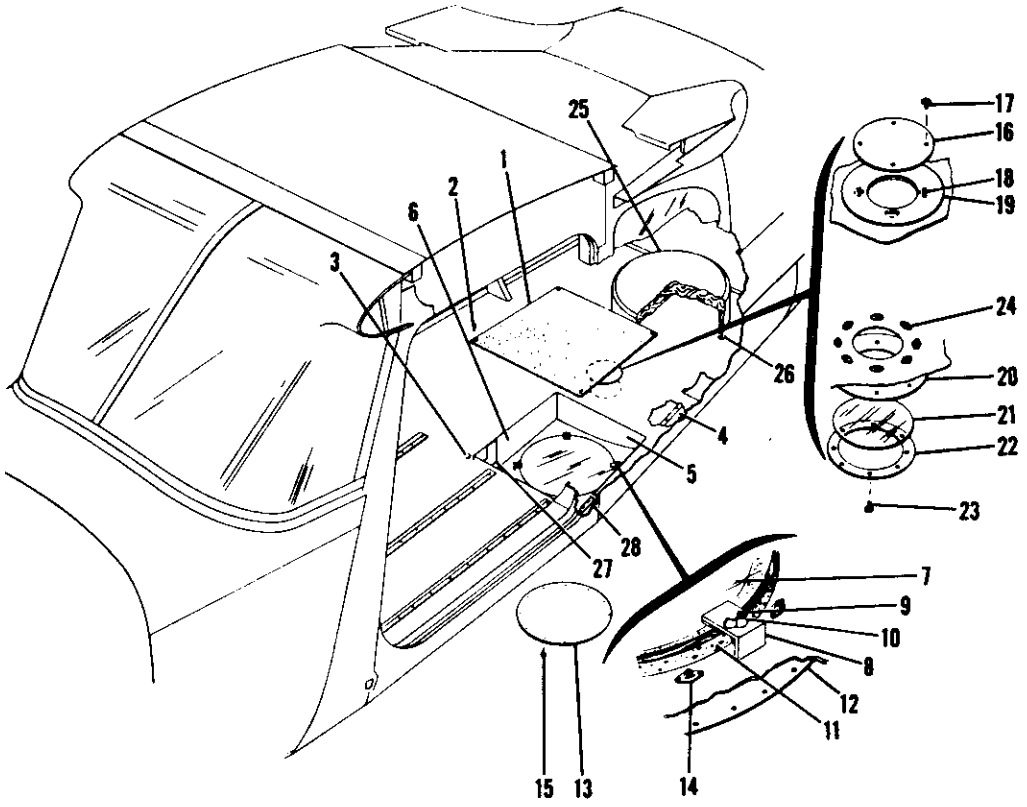

SERIAL 18051184 THRU 18051312

Figure 133. Off -Center Camera Provisions

FIGURE AND INDEX NO.	PART NUMBER	DESCRIPTION 1 2 3 4 5 6 7	UNITS PER ASSY	USABLE ON CODE
133 -		OFF CENTER CAMERA PROVISIONS INSTALLATION	NP	A
- 1	0510010-18	COVER ASSEMBLY-CAMERA BAY	1	
		ATTACHING PARTS		
- 2	AN520-10R9	SCREW	4	
- 3	NAS680A3	NUTPLATE	4	
		---*---		
- 4	0510010-32	BULKHEAD ASSEMBLY-CAMERA STRUCTURE OUTBOARD	1	
- 5	0510010-3	BULKHEAD-CAMERA STRUCTURE AFT	1	
- 6	0510010-31	BULKHEAD ASSEMBLY-CAMERA STRUCTURE INBOARD	1	
- 7	0510010-11	WINDOW-CAMERA GLASS	1	
		ATTACHING PARTS		
- 8	0510010-16	CLAMP ASSEMBLY	4	
- 9	AN520-10R16	SCREW	4	
	MS21044N3	NUT	4	
	AN935-10	LOCKWASHER	4	
-10	AN350-1032	WINGNUT	4	
		---*---		
-11	0510010-12	SEAL-CAMERA CUTOUT	1	
-12	0510010-4	DOUBLER-CAMERA CUTOUT	1	
-13	0510010-2	COVER-CAMERA WINDOW	1	
		ATTACHING PARTS		
-14	NAS444-4	NUTPLATE	12	
-15	S1021Z8-8	SCREW	12	
		---*---		
-16	0510010-30	COVER ASSEMBLY-OBSERVATION WINDOW	1	
		ATTACHING PARTS		
-17	S1021Z8-8	SCREW	4	
-18	NAS444-4	NUTPLATE	4	
		---*---		
-19	0510010-15	DOUBLER-OBSERVATION WINDOW	1	
-20	0510010-5	DOUBLER-OBSERVATION WINDOW	1	
-21	0510010-6	PLATE-PLEXIGLASS	1	
-22	0510010-7	RING-SUPPORT	1	
		ATTACHING PARTS		
-23	S1021Z8-8	SCREW	8	
-24	NAS444-4	NUTPLATE	8	
		---*---		
-25	0510190	SEAT-CAMERA	1	
		ATTACHING PARTS		
-26	AN520-10R9	SCREW	4	
	NAS680A3	NUTPLATE	4	
		---*---		
-27	0510010-19	DOUBLER	1	
-28	0510010-21	ANGLE	1	
		A---SERIAL 18051184 THRU 18051312		

Autopilot

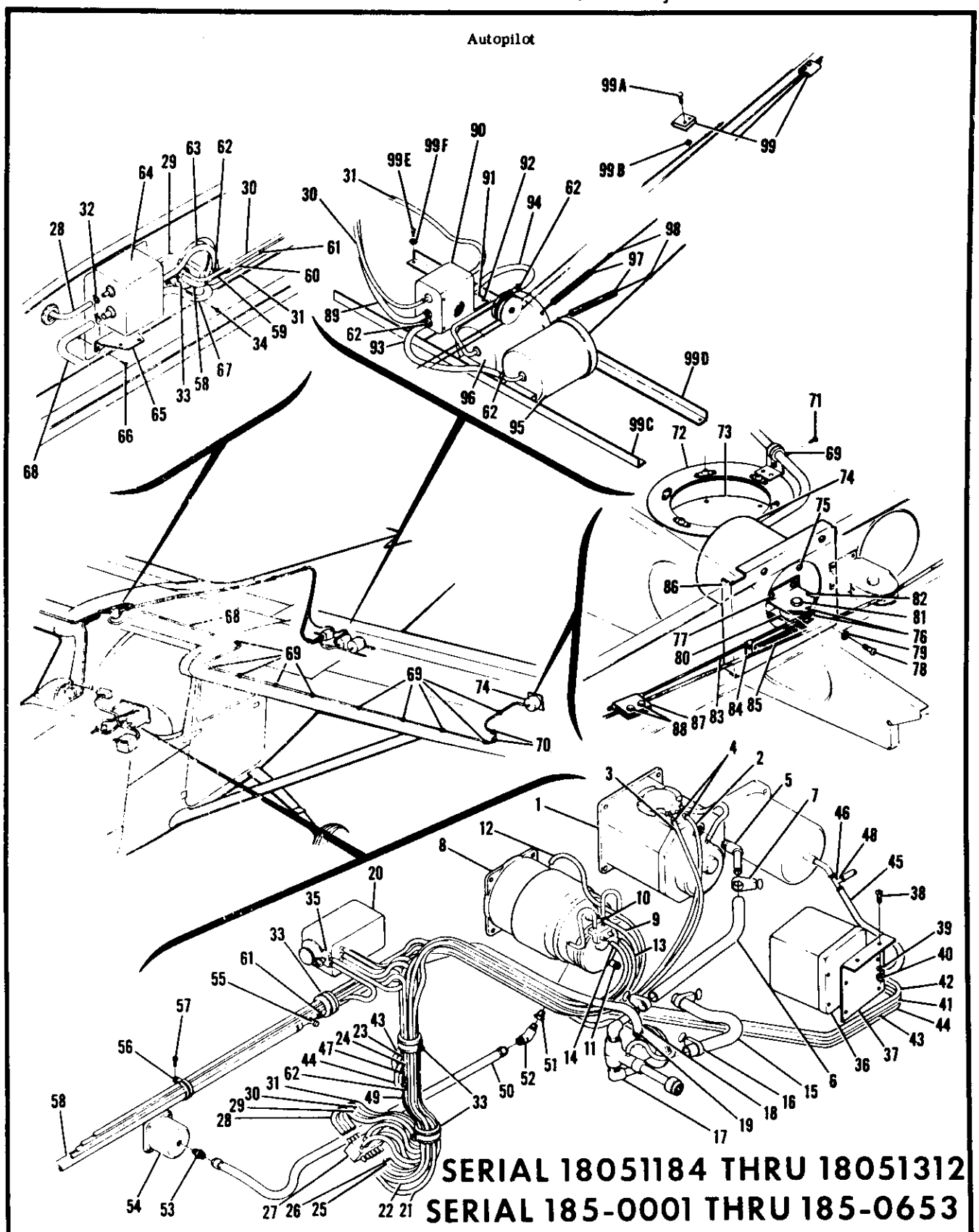

SERIAL 18051184 THRU 18051312
SERIAL 185-0001 THRU 185-0653

Figure 134. Tactair T-3 Autopilot Installation

FIGURE AND INDEX NO.	PART NUMBER	DESCRIPTION 1 2 3 4 5 6 7	UNITS PER ASSY	USABLE ON CODE
134 -		AUTO PILOT INSTALLATION-TACTAIR T-3	NP	A
- 1	0770012-7	GYRO-DIRECTIONAL	1	
		ATTACHING PARTS		
	AN520C10R16	SCREW	4	
		---*---		
- 2	B296-59	HOSE-GYRO TO TEE BLOCK BROWN TCTA	1	
- 3	B296-58	HOSE-GYRO TO TEE BLOCK PINK TCTA	1	
- 4	A482	CLAMP TCTA	2	
- 5	AN844-6D	ELBOW	1	
- 6	1200077-17	HOSE-DIRECTIONAL GYRO TO SHUT-OFF VALVE	1	
		ATTACHING PARTS		
- 7	AN737RM22	CLAMP	2	
		---*---		
- 8	0770011-24	GYRO-HORIZON	1	
		ATTACHING PARTS		
	AN520C10R16	SCREW	4	
		---*---		
- 9	B296-61	HOSE-GYRO TO TEE BLOCK GREEN TCTA	1	
-10	A482	CLAMP TCTA	1	
-11	AN842-6D	ELBOW	1	
-12	1200077-22	HOSE-HORIZONTAL GYRO TO TEE BLOCK RED	1	
-13	1200077-18	HOSE-HORIZONTAL GYRO TO TEE BLOCK YELLOW	1	
-14	1200077-23	HOSE-HORIZONTAL GYRO TO TEE BLOCK BLUE	1	
-15	1200077-16	HOSE-HORIZONTAL GYRO TO SHUT-OFF VALVE	1	
		ATTACHING PARTS		
-16	AN737RM22	CLAMP	2	
		---*---		
-17	1200077-2	VALVE-SHUT-OFF	1	
-18	A979	HOSE-SHUT-OFF VALVE TO TEST TEE 25 IN. LG.	AR	
		BULK ITEM TCTA REF 1200077-20		
-19	CS3	CLAMP TCTA	10	
-20	0770011-19	COMMAND CONTROL ASSEMBLY	1	
-21	B296-50	HOSE-COMMAND CONTROL TO TEE BLOCK BLUE TCTA	1	
-22	B296-51	HOSE-COMMAND CONTROL TO TEE BLOCK YELLOW TCTA	1	
-23	A654-5	HOSE-COMMAND CONTROL TO TEE BLOCK RED TCTA	1	
-24	A654-6	HOSE-COMMAND CONTROL TO TEE BLOCK GREEN TCTA	1	
-25	B296-52	HOSE-COMMAND CONTROL TO TEE BLOCK PINK TCTA	1	
-26	B296-53	HOSE-COMMAND CONTROL TO TEE BLOCK BROWN TCTA	1	
	0770012-13	CLAMP	6	
-27	0770011-37	TEE BLOCK ASSEMBLY	1	
		ATTACHING PARTS		
	AN515-6R22	SCREW	1	
	AN960-6L	WASHER	1	
	NAS679A06	NUT	1	
		---*---		
-28	1200077-27	HOSE-TEE BLOCK TO AILERON AMPLIFIER BLUE	1	
-29	1200077-28	HOSE-TEE BLOCK TO AILERON AMPLIFIER YELLOW	1	
-30	1200077-31	HOSE-TEE BLOCK TO ELEVATOR AMPLIFIER GREEN	1	
-31	1200077-34	HOSE-TEE BLOCK TO ELEVATOR AMPLIFIER RED	1	
-32	0770012-13	CLAMP	3	
-33	A9167-21	HARNESS BAND UC	3	
		ATTACHING PARTS		
-34	S1021Z6-8	SCREW	1	
		---*---		
		ALTITUDE HOLD INSTALLATION	NP	
-35	1200079-2	SHUT OFF VALVE-ALTITUDE HOLD	1	
-36	1200079-3	ALTITUDE HOLD ASSEMBLY	1	
		ATTACHING PARTS		
-37	1200079-10	BRACKET-MOUNTING	1	
-38	AN507-832R8	SCREW	2	
-39	AN960-8	WASHER	2	
-40	NAS679A08	NUT	2	
		---*---		
-41	B804-2	HOSE-SHUT-OFF VALVE TO ALTITUDE HOLD CLEAR TCTA	1	
-42	B804-3	HOSE-SHUT-OFF VALVE TO ALTITUDE HOLD ORANGE TCTA	1	
-43	A654-5	HOSE-ALTITUDE HOLD TO TEE RED TCTA	1	
-44	A654-6	HOSE-ALTITUDE HOLD TO TEE GREEN TCTA	1	
-45	B296-20	HOSE-ALTITUDE HOLD TO ALTIMETER CLEAR TCTA	1	
-46	1200079-9	TEE	1	
-47	1200079-8	TEE	1	
-48	0770012-13	CLAMP	9	

CONTINUED ON NEXT PAGE

FIGURE AND INDEX NO.	PART NUMBER	DESCRIPTION 1 2 3 4 5 6 7	UNITS PER ASSY	USABLE ON CODE
134 -49	1200079-4	HOSE-TEE TO TEE BLOCK RED	1	
	1200079-6	HOSE-TEE TO TEE BLOCK GREEN	1	
-50	S1168-2-22	HOSE ASSEMBLY-HORIZONTAL GYRO TO SUCTION GAGE	1	
		ATTACHING PARTS		
-51	AN912-1D	BUSHING-REDUCER	1	
-52	MS20822-2D	ELBOW	1	
-53	AN816-2D	NIPPLE	1	
		---*---		
-54	0311057-2	GAGE-SUCTION WHEN EXHAUSTED USE S1414N1	1	
	S1414N1	GAGE-SUCTION	1	
		ATTACHING PARTS		
	AN507BG632R12	SCREW	4	
		---*---		
-55	0770011-30	TEE TEST	1	
-56	MS21919WDG12	CLAMP	1	
		ATTACHING PARTS		
-57	NAS221-5	SCREW	1	
	MS21044N3	NUT	1	
		---*---		
-58	A979	HOSE-TEST TEE TO ROOT RIB TEE 66 IN. LG.	AR	
		BULK ITEM TCTA REF 1200077-14		
-59	0770011-29	TEE-FITTING	1	
-60	A979	HOSE-SPLICE 4 IN. LG. BULK ITEM TCTA	AR	
		REF 1200077-30		
-61	CS8	CLAMP TCTA	6	
-62	CS6	CLAMP TCTA	10	
-63	A978	HOSE-TEE TO AILERON AMPLIFIER 11 IN. LG. BULK ITEM	AR	
		TCTA REF 1200077-29		
-64	0770012-45	AMPLIFIER-AILERON	1	
		ATTACHING PARTS		
-65	1200077-10	BRACKET-AILERON AMPLIFIER	1	
-66	AN515-8R8	SCREW	2	
	AN960-8	WASHER	2	
	NAS679A08	NUT	2	
		---*---		
-67	A978	HOSE-AILERON AMPLIFIER TO RIGHT WING SERVO 159 IN. LG.	AR	
		BULK ITEM TCTA REF 1200077-25		
-68	A978	HOSE-AILERON AMPLIFIER TO LEFT WING SERVO 196.5 IN. LG.	AR	
		BULK ITEM TCTA REF 1200077-26		
		ATTACHING PARTS		
-69	S1592-2A	HARNESS BAND UC	9	
-70	49165-22	HARNESS BAND UC	2	
-71	S1021Z6-8	SCREW	11	
		---*---		
-72	S1072-1	DOUBLER ASSEMBLY	2	
-73	S225-6	PLATE-ACCESS	2	
		ATTACHING PARTS		
	S1021Z8-8	SCREW	6	
		---*---		
-74	1200077-5	SERVO ASSEMBLY-AILERON	2	
		ATTACHING PARTS		
	1200077-9	MOUNTING PLATE	1	
-75	AN515-8R8	SCREW	8	
	AN960-8	WASHER	8	
	NAS679A08	NUT	4	
		---*---		
-76	A1272	BRACKET-PULLEY TCTA	2	
		ATTACHING PARTS		
-77	AN515-8-14	SCREW	2	
-78	AN515-8-7	SCREW	2	
-79	AN960-8	WASHER	4	
		---*---		
-80	G37	PULLEY ATPU	1	
		ATTACHING PARTS		
-81	AN3-6A	BOLT	1	
	AN960-10L	WASHER	1	
	MS21044N3	NUT	1	
	A1396	BEARING TCTA	1	
		---*---		

CONTINUED ON NEXT PAGE

FIGURE AND INDEX NO.	PART NUMBER	DESCRIPTION 1 2 3 4 5 6 7	UNITS PER ASSY	USABLE ON CODE
134 -82	MS24665-134	PIN-COTTER	2	
-83	81341-8	CABLE ASSEMBLY TCTA	1	
-84	A427	CLAMP-CABLE TCTA	1	
		ATTACHING PARTS		
	AN500A4-4	SCREW	1	
	AN960-4	WASHER	1	
	NAS679A04	NUT	1	
		---*---		
-85	1200077-7	SPRING-TAKE-UP	2	
-86	1200077-3	DOUBLER-REAR SPAR LH	1	
	1200077-4	DOUBLER-REAR SPAR RH	1	
-87	1200077-8	CLAMP-CABLE	2	
		ATTACHING PARTS		
-88	AN3-3A	BOLT	2	
	AN960-10	WASHER	2	
	MS21044N3	NUT	2	
		---*---		
-89	A978	HOSE-SPLICE TO ELEVATOR AMPLIFIER 100 IN. LG.	AR	
		BULK ITEM TCTA REF 1200077-32		
-90	0770012-45	AMPLIFIER-ELEVATOR	1	
		ATTACHING PARTS		
-91	1200077-37	BRACKET-ELEVATOR AMPLIFIER	1	
-92	AN3-3A	BOLT	4	
	AN960-10	WASHER	4	
	MS21044N3	NUT	4	
		---*---		
-93	A978	HOSE-ELEVATOR AMPLIFIER TO UP SERVO 12 IN. LG.	AR	
		BULK ITEM TCTA REF 1200077-33		
-94	A978	HOSE-ELEVATOR AMPLIFIER TO DOWN SERVO 12 IN. LG.	AR	
		BULK ITEM TCTA REF 1200077-35		
-95	0770028-5	SERVO ASSEMBLY-ELEVATOR UP	1	
-96	0770028-6	SERVO ASSEMBLY-ELEVATOR DOWN	1	
		ATTACHING PARTS		
	AN3-3A	BOLT	4	
	AN960-10	WASHER	4	
	MS21044N3	NUT	4	
		---*---		
-97	1200077-13	SPRING-TAKE UP	2	
		ATTACHING PARTS		
-98	0770011-33	CLAMP	1	
	AN500A4-4	SCREW	1	
	AN960-4	WASHER	1	
	NAS679A04	NUT	1	
		---*---		
-99	0770012-15	CLAMP-CABLE	2	
		ATTACHING PARTS		
-99A	AN3-4A	BOLT	2	
-99B	MS21044N3	NUT	2	
		---*---		
-99C	0770028-3	ANGLE-FORWARD	1	
-99D	0770028-4	ANGLE-AFT	1	
		ATTACHING PARTS		
-99E	AN3-3A	BOLT	2	
-99F	AN960-10	WASHER	2	
	MS21044N3	NUT	2	
		---*---		
		A---SERIAL 18051184 THRU 18051312		
		SERIAL 185-0001 THRU 185-0653		

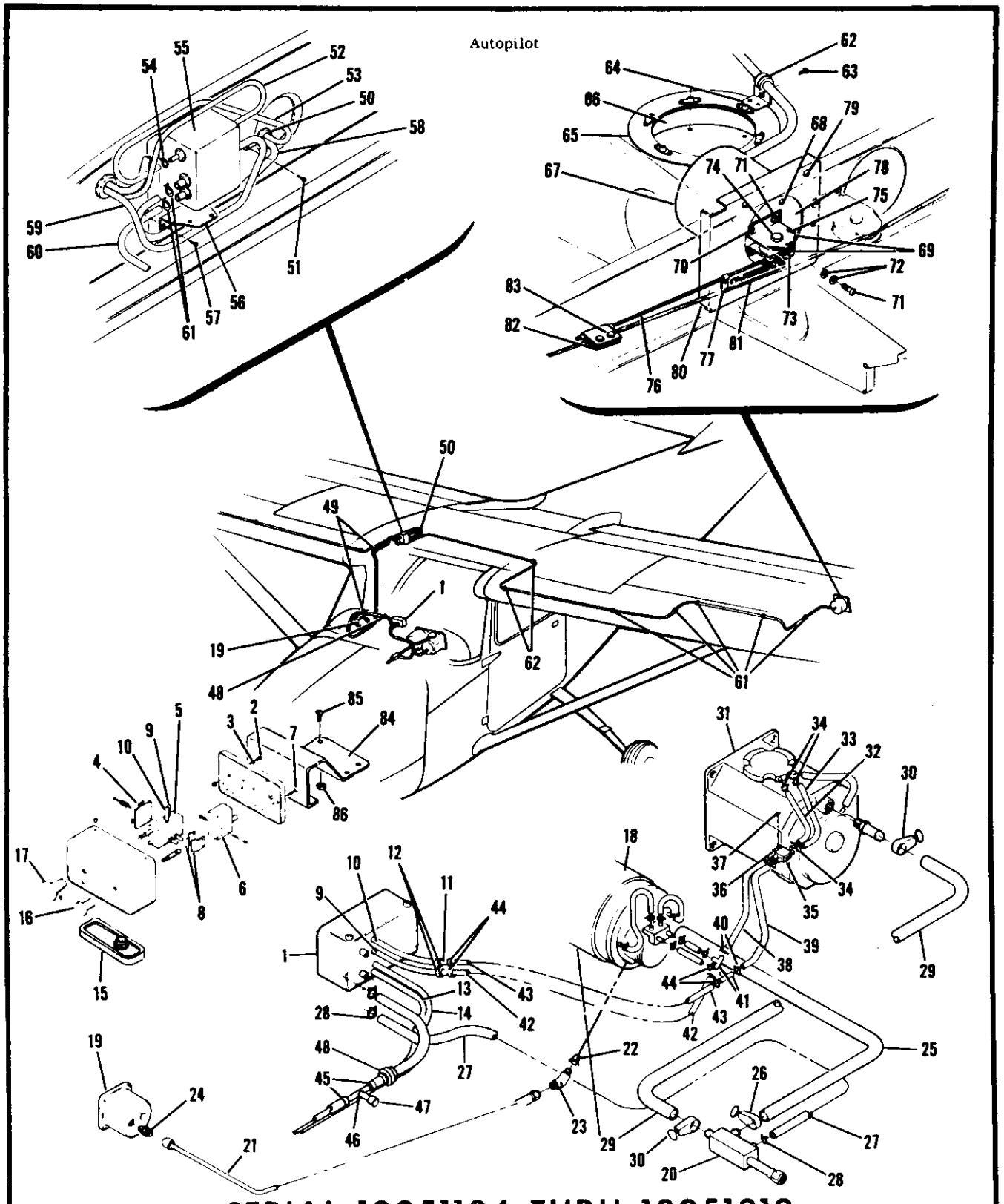

SERIAL 18051184 THRU 18051312
SERIAL 185-0001 THRU 185-0653

Figure 135. Tactair T-2 Autopilot Installation

FIGURE AND INDEX NO.	PART NUMBER	DESCRIPTION 1 2 3 4 5 6 7	UNITS PER ASSY	USABLE ON CODE
135 -		AUTO PILOT INSTALLATION-TACTAIR T-2	NP	A
- 1	0770012-5	UNIT ASSEMBLY-CONTROL	1	
		ATTACHING PARTS		
- 2	AN500C4-7	SCREW	3	
- 3	AN960-4L	WASHER	3	
		---*---		
- 4	A1106	FILTER TCTA	1	
	A1108	DISC-PAPER TCTA	1	
	A1105	GASTET TCTA	1	
- 5	C915	TRIM ASSEMBLY-ROLL TCTA	1	
		ATTACHING PARTS		
	AN507-440-5	SCREW	2	
		---*---		
- 6	C914	BODY ASSEMBLY TCTA	1	
		ATTACHING PARTS		
- 7	AN507-440-5	SCREW	2	
		---*---		
	AN6227B1	O RING	1	
- 8	A911	SPRING TCTA	2	
- 9	B296-7	HOSE .09 ID BLUE 6.76 IN. LG. TCTA	1	
-10	B296-8	HOSE .09 ID YELLOW 6.1875 IN. LG. TCTA	1	
-11	A1213	CONNECTOR-HOSE TCTA	2	
-12	A482	CLAMP TCTA	2	
-13	B296-17	HOSE .09 ID YELLOW 18 IN. LG. TCTA	1	
-14	B296-18	HOSE .09 ID BLUE 18 IN. LG. TCTA	1	
-15	B1610	FILTER TCTA	1	
-16	0713303-9	KNOB	1	
-17	0713303-11	KNOB	1	
-18	0770012-6	GYRO-HORIZONTAL	1	
		ATTACHING PARTS		
	AN520C10R16	SCREW	4	
		---*---		
-19	0311057-2	GAGE-SUCTION WHEN EXHAUSTED USE S1414N1	1	
	S1414N1	GAGE-SUCTION	1	
		ATTACHING PARTS		
	AN507BG32R12	SCREW	4	
		---*---		
-20	0770012-8	TEE ASSEMBLY-RESTRICTOR	1	
	M74C524-12E	SET SCREW FLN	1	
-21	S1168-2-22	HOSE ASSEMBLY	1	
		ATTACHING PARTS		
-22	AN912-1D	BUSHING	1	
-23	MS20823-2D	ELBOW	1	
-24	AN816-2D	NIPPLE	1	
		---*---		
-25	1200078-7	HOSE	1	
-26	AN737RM22	CLAMP	2	
-27	A978	TUBE-RESTRICTOR TEE TO CONTROL UNIT IN. LG.	AR	
		BULK ITEM TCTA REF 1200078-13		
		ATTACHING PARTS		
-28	CR6	CLAMP CR8	2	
		---*---		
-29	1200078-2	HOSE	1	
-30	AN737RM22	CLAMP	2	

CONTINUED ON NEXT PAGE

FIGURE AND INDEX NO.	PART NUMBER	DESCRIPTION 1 2 3 4 5 6 7	UNITS PER ASSY	USABLE ON CODE
135 -31	1200077-39	GYRO-DIRECTIONAL	1	
		ATTACHING PARTS		
	AN520C10R16	SCREW	8	
		---*---		
-32	B296-58	HOSE .09 ID PINK 24 IN. LG. TCTA	1	
-33	B296-59	HOSE .09 ID BROWN 24 IN. LG. TCTA	1	
		ATTACHING PARTS		
-34	0770012-13	CLAMP	4	
		---*---		
-35	0770012-9	ADJUSTER ASSEMBLY-SENSITIVITY	1	
		ATTACHING PARTS		
-36	0770012-39	CLAMP	1	
-37	S1022Z6-8	SCREW	2	
	NAS395-5-3	NUT	2	
		---*---		
-38	B296-5	HOSE .09 ID BLUE 4 IN. LG. TCTA	1	
-39	B296-4	HOSE .09 ID YELLOW 4 IN. LG. TCTA	1	
		ATTACHING PARTS		
-40	0770012-13	CLAMP	4	
		---*---		
-41	0770012-17	TEE	2	
-42	1200078-12	HOSE	1	
-43	1200078-11	HOSE	1	
		ATTACHING PARTS		
-44	A482	CLAMP TCTA	4	
-45	CS6	CLAMP CRB	2	
-46	0770012-43	TEE-TEST	1	
-47	1200077-15	CAP-TEST TEE	1	
-48	S1592-4A	HARNESS BAND UC	1	
		ATTACHING PARTS		
	S1021Z6-8	SCREW	1	
		---*---		
-49	MS21919WDG9	CLAMP	2	
		ATTACHING PARTS		
	NAS221-5	SCREW	1	
	MS21044N3	NUT	1	
		---*---		
-50	S1592-3A	HARNESS BAND UC	1	
		ATTACHING PARTS		
-51	S1021Z6-8	SCREW	1	
		---*---		
-52	1200078-10	HOSE-CONTROL UNIT TO AMPLIFIER BLUE	1	
-53	1200078-15	HOSE-CONTROL UNIT TO AMPLIFIER YELLOW	1	
		ATTACHING PARTS		
-54	0770012-13	CLAMP	2	
		---*---		
-55	0770012-45	AMPLIFIER-AILERON	1	
-56	1200077-10	BRACKET-AMPLIFIER	1	
		ATTACHING PARTS		
-57	AN515-8R8	SCREW	2	
	AN960-8	WASHER	2	
	NAS679A08	NUT	2	
		---*---		

CONTINUED ON NEXT PAGE

FIGURE AND INDEX NO.	PART NUMBER	DESCRIPTION 1 2 3 4 5 6 7	UNITS PER ASSY	USABLE ON CODE
135 -58	1200077-8	HOSE-AILERON AMPLIFIER TO TEST TEE	1	
-59	1200077-25	HOSE-AILERON AMPLIFIER TO RH AILERON SERVO	1	
-60	1200077-26	HOSE-AILERON AMPLIFIER TO LH AILERON SERVO	1	
-61	CS6	CLAMP CRB	5	
-62	S1592-2A	HARNESS BAND UC	7	
		ATTACHING PARTS		
-63	S1021Z6-8	SCREW	1	
		---*---		
-64	1200077-12	CLIP	2	
-65	S1072-1	DOUBLER ASSEMBLY	1	
-66	S225-6	PLATE-INSPECTION	1	
		ATTACHING PARTS		
	S1022Z8-8	SCREW	6	
		---*---		
-67	1200077-5	SERVO ASSEMBLY-AILERON	2	
		ATTACHING PARTS		
-68	AN515-8R8	SCREW	4	
	AN960-8	WASHER	4	
		---*---		
-69	A1748	BRACKET-PULLEY TCTA	2	
		ATTACHING PARTS		
-70	AN515-8-14	SCREW	2	
-71	AN515-8-7	SCREW	2	
-72	AN960-8	WASHER	5	
		---*---		
-73	G37	PULLEY ATPU	1	
		ATTACHING PARTS		
-74	AN3-6A	BOLT	1	
	AN960-10L	WASHER	1	
	MS21044N3	NUT	1	
		---*---		
-75	MS24665-134	PIN-COTTER	2	
-76	B1341-8	CABLE ASSEMBLY TCTA	1	
-77	A427	CLAMP TCTA	1	
		ATTACHING PARTS		
	AN500A4-4	SCREW	1	
	AN960-8	WASHER	1	
	AN960-4	WASHER	1	
	NAS679A04	NUT	1	
		---*---		
-78	1200077-9	PLATE-MOUNTING	2	
		ATTACHING PARTS		
-79	AN515-8R8	SCREW	4	
	AN960-8	WASHER	4	
	NAS679A08	NUT	4	
		---*---		
-80	1200077-3	DOUBLER-REAR SPAR LH	1	
	1200077-4	DOUBLER-REAR SPAR RH	1	
-81	1200077-7	SPRING-TAKE-UP	1	
-82	1200077-8	CLAMP-CABLE	1	
		ATTACHING PARTS		
-83	AN3-3A	BOLT	2	
	AN960-10	WASHER	2	
	MS21044N3	NUT	2	
		---*---		
-84	0513194-1	MOUNTING BASE	1	
		ATTACHING PARTS		
-85	S1021Z8-8	SCREW	4	
-86	NAS446-4-3	NUT	4	
		---*---		
		A---SERIAL 18051184 THRU 18051312		
		SERIAL 185-0001 THRU 185-0653		

Auto Pilot (Cont)

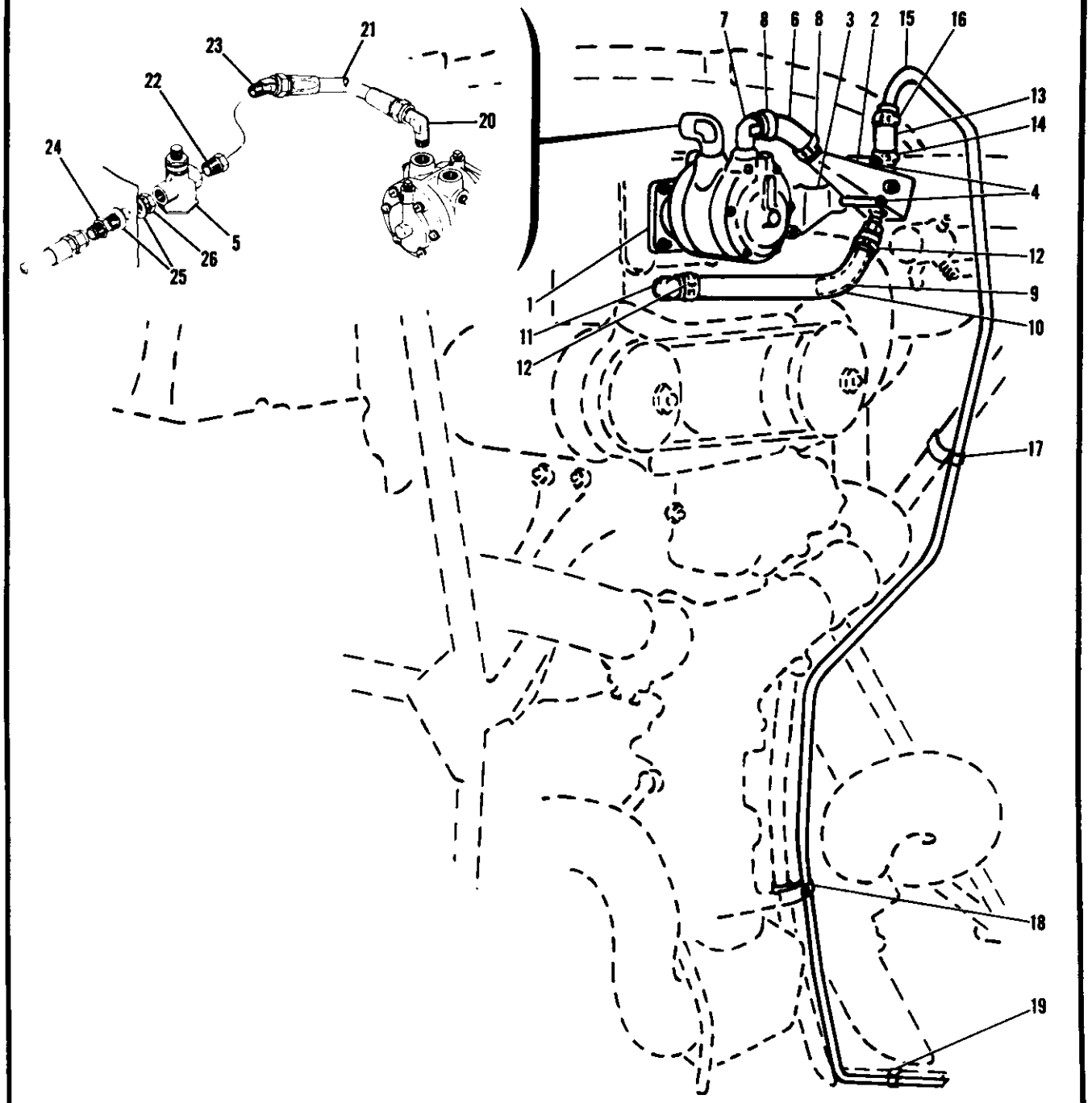

SERIAL 18051184 THRU 18051312

Figure 136. Vacuum System for Tactair Auto Pilot

FIGURE AND INDEX NO.	PART NUMBER	DESCRIPTION 1 2 3 4 5 6 7	UNITS PER ASSY	USABLE ON CODE
136 -		SYSTEM INSTALLATION-TACTAIR VACUUM	NP	A
- 1	0750104-1	PUMP-VACUUM	1	
	0750104-2	PUMP-VACUUM ALT	1	
	0750104-3	PUMP-VACUUM ALT	1	
	AN4050-1	BUSHING USED WITH 0750104-1 PUMP ONLY	1	
		ATTACHING PARTS		
	AN520-10R14	SCREW	1	
	AN935-10L	LOCKWASHER	1	
		---*---		
- 2	0750103-1	SEPARATOR-OIL	1	
		ATTACHING PARTS		
- 3	0750100-11	BRACKET	1	
- 4	AN3-15A	BOLT	2	
	AN960D10L	WASHER	2	
	MS21044N3	NUT	2	
		---*---		
- 5	0813619-2	VALVE-SUCTION RELIEF	1	
- 6	S51-8	HOSE-PUMP TO OIL SEPARATOR 3.25 IN LG BULK ITEM	1	
		REF S-51-8-18		
		ATTACHING PARTS		
- 7	AN842-8	ELBOW	1	
- 8	NAS397-14	CLAMP	2	
		---*---		
- 9	0750100-12	TUBE-INSERT	1	
-10	S51-8	HOSE-OIL SEPARATOR TO ENGINE 9.00 IN LG BULK ITEM	1	
		REF S-51-8-36		
		ATTACHING PARTS		
-11	AN844-8	ELBOW	1	
-12	NAS397-14	CLAMP	2	
		---*---		
-13	S51-8	HOSE-VENT 2.00 IN LG BULK ITEM REF S-51-8-8	1	
		ATTACHING PARTS		
-14	NAS397-14	CLAMP	1	
		---*---		
-15	0500106-251	LINE-VENT	1	
		ATTACHING PARTS		
-16	NAS397-14	CLAMP	1	
-17	AN742D8	CLAMP	1	
	AN742D14	CLAMP	1	
	AN3-4A	BOLT	1	
	MS21044N3	NUT	1	
-18	AN742D8	CLAMP	1	
	S1485D12U	CLAMP	1	
	S1021Z10-8	SCREW	1	
-19	S1486DG12U	CLAMP	1	
	MS21919DG8	CLAMP	1	
	S1021Z10-10	SCREW	1	
		---*---		
-20	MS20822-6-6B	ELBOW	1	
-21	S1168-6-6 1/2	HOSE ASSEMBLY	1	
		ATTACHING PARTS		
-22	AN912-2	BUSHING-REDUCER	1	
-23	MS20823-6B	ELBOW	1	
		---*---		
-24	S1988-1	FITTING	1	
-25	AN960D916	WASHER	2	
-26	AN924-6D	NUT	1	
		A---SERIAL 18051184 THRU 18051312		

X

NUMERICAL INDEX

PART NUMBER	FIGURE AND INDEX NO.
AN123883	113A-36
AN155B16S	97 -74
AN155B32L	95 -54
AN155B32L	95 -54A
AN155B32L	95 -62
AN155B32S	87A- 2
AN155B32S	94A-36
AN155B32S	94A-40
AN155B32S	95 - 9
AN155B32S	96 -26
AN155B32S	98 - 3
AN155B32S	98 -41
AN155B32S	99 - 3
AN155B32S	99A- 2
AN155B32S	129 -46
AN155B8S	46 -43
AN155B8S	46A-40
AN155B8S	46B-63
AN155B8S	100 -24
AN161-22LL	87A- 3
AN161-22LL	129 -43
AN161-22RS	98 - 4
AN161-22RS	98 -41
AN161-22RS	99 - 4
AN161-22RS	99A- 2
AN161-32LL	95 -55
AN161-32LL	95 -55A
AN161-8LS	46 -39
AN161-8RS	46B-64
AN165-22RS	96 -25
AN165-8LS	46A-41
AN165-8LS	46B-62
AN200KS4	94A- 8
AN21-10	94A-34
AN21-10	94A-39
AN21-13	95 - 7
AN227-6	66 - 8
AN227-6B	35A-54
AN227-7	66 - 8
AN227-7B	35A-54
AN227-8B	35A-54
AN227-9B	35A-54
AN23-10	96 -10
AN23-10	96 -13
AN23-10	98 - 5
AN23-10	98 -12
AN23-10	99 - 5
AN23-10	99 -12
AN23-11	98 - 8
AN23-11	98 -15
AN23-11	98 -42
AN23-11	98 -57
AN23-11	99 - 8
AN23-11	99 -15
AN23-11	99A- 3
AN23-11	99A-10
AN23-11	127 -49
AN23-11	128 -45
AN23-12	97 - 8
AN23-12	97 -11
AN23-15A	60 -20
AN23-15A	61 -22
AN23-15A	61A-21
AN23-15A	63 -18
AN23-16	60 - 2
AN23-16	97 -13
AN23-16	97 -17
AN23-16A	63 - 2
AN23-16A	63A- 3
AN23-19A	60 -20
AN23-19A	60 -33
AN23-19A	61 - 2
AN23-19A	61 -35
AN23-19A	61A- 2

PART NUMBER	FIGURE AND INDEX NO.
AN23-19A	61A-34
AN23-19A	63 -18
AN23-19A	63 -70
AN23-19A	63B-18
AN23-20A	63C-90
AN23-9	97 - 3
AN23-9	98 -56
AN23-9	99A- 9
AN24-13	60 -24
AN24-13	60 -25
AN24-13	96 -32
AN24-13A	61 -26
AN24-13A	61 -27
AN24-13A	61A-25
AN24-13A	61A-26
AN24-16	60 -26
AN24-16A	61 -28
AN24-16A	61A-27
AN24-28A	62 - 4
AN24-29A	59A- 2
AN2552-3A	125 - 1
AN2552-3A	125A- 1
AN2552-3A	125B- 1
AN3-10A	15 -14
AN3-10A	63A-13
AN3-10A	63A-21
AN3-10A	70A- 9
AN3-10A	74 -74
AN3-10A	74 -84
AN3-10A	87 -29
AN3-10A	91 -26
AN3-10A	91 -40
AN3-10A	92 -23
AN3-10A	92 -37
AN3-10A	94 -13
AN3-10A	94A-17
AN3-10A	95A-17
AN3-10A	97 -31
AN3-10A	98 -46
AN3-10A	100 -28
AN3-10A	131 -17
AN3-10A	132 -17
AN3-11A	15 - 9
AN3-11A	59 -20
AN3-11A	59A-12
AN3-11A	62 -58
AN3-11A	64 - 1
AN3-11A	64A-10
AN3-11A	75 -25
AN3-11A	87 -34
AN3-11A	91 - 9
AN3-11A	91 -37
AN3-11A	92 - 7
AN3-11A	92 -34
AN3-11A	94 - 7
AN3-11A	94 -20
AN3-11A	94A-16
AN3-11A	94A-28
AN3-11A	94A-44
AN3-12A	74 -29
AN3-12A	74 -32
AN3-12A	76 -39
AN3-12A	94A-22
AN3-12A	100 -19
AN3-13A	63A-21D
AN3-13A	74 -64
AN3-13A	87 - 5
AN3-13A	90 -32
AN3-13A	94A-20
AN3-14A	91 -20
AN3-14A	107 - 6
AN3-14A	129 -29
AN3-15A	46A-22
AN3-15A	87 -10

PART NUMBER	FIGURE AND INDEX NO.
AN3-15A	116 - 4
AN3-15A	117 - 4
AN3-15A	117A- 4
AN3-15A	136 - 4
AN3-16A	87 -21
AN3-16A	92 -17
AN3-17A	63A-21C
AN3-17A	63C- 2
AN3-20A	30 - 6
AN3-20A	32 - 1
AN3-20A	32 - 6
AN3-20A	32A- 1
AN3-20A	32A- 6
AN3-20A	126 -45
AN3-21A	30 - 2
AN3-21A	95 -43
AN3-21A	95 -65
AN3-3A	3 -48
AN3-3A	13 - 6C
AN3-3A	38 - 6
AN3-3A	49 - 4
AN3-3A	50 - 4
AN3-3A	57 -28
AN3-3A	57A-16
AN3-3A	58 -23
AN3-3A	66 -22
AN3-3A	70B- 2
AN3-3A	70B-10
AN3-3A	75 -14
AN3-3A	75 -42
AN3-3A	90 -18A
AN3-3A	92 -41
AN3-3A	105 -29
AN3-3A	120B-78
AN3-3A	120C-80
AN3-3A	121 -10
AN3-3A	121 -57
AN3-3A	121 -59
AN3-3A	122 -11
AN3-3A	122 -55
AN3-3A	122 -57
AN3-3A	134 -88
AN3-3A	134 -92
AN3-3A	134 -96
AN3-3A	134 -99E
AN3-3A	135 -83
AN3-4A	15 -33
AN3-4A	22 - 9
AN3-4A	22 -17
AN3-4A	23 -18
AN3-4A	30 -72
AN3-4A	30 -86
AN3-4A	38 -23
AN3-4A	60 -57
AN3-4A	61 -59
AN3-4A	61A-59
AN3-4A	63 -87
AN3-4A	63C-99B
AN3-4A	65 -19
AN3-4A	66 - 2
AN3-4A	70 - 7B
AN3-4A	70A-21
AN3-4A	70B- 2
AN3-4A	70B- 6
AN3-4A	76 -33
AN3-4A	76 -38
AN3-4A	76 -74
AN3-4A	77 -69
AN3-4A	82 - 4
AN3-4A	82 - 9
AN3-4A	83 - 8
AN3-4A	83 -14
AN3-4A	91 -16
AN3-4A	92 -13

PART NUMBER	FIGURE AND INDEX NO.
AN3-4A	95A- 9
AN3-4A	96 -39
AN3-4A	98 -70
AN3-4A	99A-23
AN3-4A	113 -13
AN3-4A	117B-16
AN3-4A	117C-19
AN3-4A	117E-12
AN3-4A	126 -13
AN3-4A	126A-18
AN3-4A	134 -99A
AN3-4A	136 -17
AN3-5A	20 -17
AN3-5A	30 -60
AN3-5A	30 -68
AN3-5A	38 -28
AN3-5A	59 -25
AN3-5A	59 -29
AN3-5A	60 -57
AN3-5A	61 -59
AN3-5A	63 -87
AN3-5A	63C-99B
AN3-5A	70B- 6
AN3-5A	74 -15
AN3-5A	74 -29
AN3-5A	74 -92
AN3-5A	75 -23
AN3-5A	77 -66
AN3-5A	89 - 88
AN3-5A	90 -18
AN3-5A	90 -37
AN3-5A	114 -10
AN3-5A	120A-39
AN3-5A	120B-35
AN3-5A	120C-36
AN3-6A	15 - 8
AN3-6A	70A- 5
AN3-6A	70B- 6
AN3-6A	74 -93A
AN3-6A	75 -31
AN3-6A	76 -39
AN3-6A	76 -40A
AN3-6A	76 -86
AN3-6A	90 -18
AN3-6A	90 -22
AN3-6A	90 -24
AN3-6A	90 -45
AN3-6A	96 -47
AN3-6A	97 -21
AN3-6A	97 -26
AN3-6A	97 -36
AN3-6A	100 -34
AN3-6A	126A-13
AN3-6A	126A-16
AN3-6A	134 -81
AN3-6A	135 -74
AN3-6A	97 -41
AN3-60A	84 -48
AN3-60A	85 -35
AN3-62A	131 -68
AN3-62A	132 -68
AN3-67A	84 -45
AN3-67A	85 -32
AN3-7A	14 -10
AN3-7A	46 -36
AN3-7A	46A-33
AN3-7A	46B-47
AN3-7A	74 -10
AN3-7A	74 -13
AN3-7A	74 -27B
AN3-7A	75 -21B
AN3-7A	76 -40
AN3-7A	90 -18
AN3-7A	95 -56

PART NUMBER	FIGURE AND INDEX NO.
AN3-7A	127 -38
AN3-7A	128 -36
AN310-3	96 -11
AN310-3	96 -14
AN310-3	97 - 4
AN310-3	97 - 9
AN310-3	97 -11
AN310-3	97 -14
AN310-3	97 -18
AN310-3	98 - 6
AN310-3	98 - 9
AN310-3	98 -13
AN310-3	98 -16
AN310-3	98 -42
AN310-3	99 - 6
AN310-3	99 - 9
AN310-3	99 -13
AN310-3	99 -16
AN310-3	99A- 3
AN310-3	127 -49
AN310-3	128 -45
AN310-4	87 -18
AN310-4	96 -33
AN310-8	47 -25
AN310-8	48 -25
AN310-8	48A-25
AN310-8	48B-23
AN315-3R	38 -23
AN315-3R	74 -16A
AN315-3R	74 -71
AN315-3R	74 -79
AN315-3R	74 -89
AN315-3R	76 -39
AN315-3R	76 -93
AN315-3R	90 -40
AN315-4R	76 -92
AN315-4R	117D-17C
AN316-4	87A- 1
AN316-4	129 -47
AN316-4R	14 -13
AN316-4R	15 -13
AN316-4R	87 - 3
AN316-4R	93 - 3
AN316-4R	87 -12
AN316C4R	123B-18
AN316C5R	63B-25
AN320-1	94A-34
AN320-1	94A-39
AN320-1	95 - 7
AN320-3	98 -58
AN320-3	99A-11
AN320-5	74 -82
AN320-8	47 - 5
AN320-8	48 - 4
AN320-8	48A- 4
AN320-8	48B- 5
AN323-60	117B- 9
AN340-10	123B-16
AN340-3	123A-12
AN340-4	94B-13
AN340-416	98 -72
AN340-416	99A-25
AN340-416	123B-18
AN340-6	68A-40
AN340-8	67 -50
AN340-8	81 -36
AN340-8	81A-11
AN340-8	81B-36
AN340-8	81D-11
AN340-8	94B-21
AN34086	67 -20
AN34086	67 -70
AN34086	67 -71
AN34086	68 -22

PART NUMBER	FIGURE AND INDEX NO.
AN34086	68A-18A
AN34086	68A-39
AN34086	68A-42
AN34086	68A-48
AN34086	68B-18A
AN34086	68B-40
AN34086	68B-41
AN34086	68B-42
AN34086	68B-49
AN34086	68C-20
AN34086	68C-43
AN34086	68C-44
AN34086	68C-45
AN34086	95B- 1
AN34086	95B-31
AN34086	101 - 2
AN34088	67 -54
AN34088	68 -53
AN34088	68A-11
AN34088	68A-21
AN34088	68B-12
AN34088	68B-21
AN34088	68C-15
AN345-10	59A-38
AN345-10	76 -42C
AN350-1032	133 -10
AN356-1032	74 -16A
AN356-1032	74 -72
AN356-1032	74 -80
AN356-1032	74 -90
AN356-1032	75 -19A
AN356-420	98 -73
AN356-420	99A-26
AN4-10A	35 -11
AN4-10A	46A-38
AN4-10A	94A- 2
AN4-10A	95 -31
AN4-10A	95 -51
AN4-10A	96 - 2
AN4-10A	96 - 5
AN4-10A	96 -16
AN4-10A	96 -36
AN4-10A	98 -23
AN4-10A	98 -26
AN4-10A	98 -29
AN4-10A	99 -23
AN4-10A	99 -26
AN4-10A	99 -29
AN4-10A	131 -38
AN4-10A	132 -38
AN4-11A	19 - 2
AN4-11A	20 - 1
AN4-11A	21 - 1
AN4-11A	21 -31
AN4-11A	40 - 5
AN4-11A	40A- 5
AN4-11A	41 - 5
AN4-11A	64 - 2
AN4-11A	64 -17
AN4-11A	64A-11
AN4-11A	64A-15
AN4-11A	75 -35
AN4-12	46B-37
AN4-12	46B-43
AN4-12A	20 - 4
AN4-12A	38 -11
AN4-12A	64 -17
AN4-12A	96 -27
AN4-12A	126 - 8
AN4-12A	127 - 4
AN4-12A	128 - 4
AN4-13A	43 - 3
AN4-13A	59 - 5
AN4-13A	65B- 3

PART NUMBER	FIGURE AND INDEX NO.
AN4-13A	107 - 2
AN4-13A	108 - 3
AN4-13A	110 - 4
AN4-13A	126 -43
AN4-14A	38 -15
AN4-14A	62 -40
AN4-14A	63 -37
AN4-14A	63B-33
AN4-14A	95 -26
AN4-14A	96 -21
AN4-14A	98 -19
AN4-14A	99 -19
AN4-15A	19 - 1
AN4-15A	100 -37
AN4-16A	95 -40
AN4-17A	65B- 7
AN4-20A	100 -37
AN4-21A	95 -21
AN4-21A	95 -34
AN4-21A	97 -47
AN4-26A	64 - 7
AN4-26A	64A- 2
AN4-3A	103 -46
AN4-3A	104 -31
AN4-3A	114 -25
AN4-30A	94A-11
AN4-31A	94 - 2
AN4-31A	94A- 1
AN4-33A	95 -16
AN4-4A	70A-18
AN4-4A	76 -76
AN4-4A	120A- 2
AN4-4A	120B-72
AN4-4A	120C-74
AN4-4A	121 - 8
AN4-4A	121 -30
AN4-4A	122 - 9
AN4-4A	122 -31
AN4-40A	42 -19
AN4-40A	42C-18
AN4-42A	14 - 2
AN4-45A	44 -13
AN4-5	87 -16
AN4-5A	60 -53
AN4-5A	61 -55
AN4-5A	61A-55
AN4-5A	63 -83
AN4-5A	63C-97
AN4-5A	64A-25
AN4-5A	65 -35
AN4-5A	65A-14
AN4-5A	107 -25
AN4-5A	108 -27
AN4-5A	113 -35
AN4-5A	115 -13
AN4-5A	119 - 2
AN4-5A	120 - 2
AN4-6A	46 -21
AN4-6A	46 -33
AN4-6A	46A-51
AN4-6A	59 -33
AN4-6A	64 - 3
AN4-6A	64 -18
AN4-6A	64A-12
AN4-6A	64A-16
AN4-6A	64A-20
AN4-6A	64A-27
AN4-6A	65 -34
AN4-6A	65A- 9
AN4-6A	65A-16
AN4-6A	65B-18
AN4-6A	66 -18
AN4-6A	74 -62
AN4-6A	75 -45

PART NUMBER	FIGURE AND INDEX NO.
AN4-6A	96 -42
AN4-6A	121 - 5
AN4-6A	121 - 5A
AN4-6A	122 - 6
AN4-6A	122 - 6A
AN4-6A	127 -45
AN4-6A	128 -42
AN4-60A	15 - 2
AN4-62A	97 -54
AN4-62A	97 -69
AN4-7A	21 -32
AN4-7A	47 -30
AN4-7A	48A-34
AN4-7A	48B-35
AN4-7A	65A- 9
AN4-7A	70 - 58
AN4-7A	131 -32
AN4-7A	132 -32
AN4H16A	42 -31
AN4H16A	42C-30
AN4022-1	77 -39
AN4022-1	118 - 1
AN4022-1	118 - 2
AN4022-1	118 - 4
AN4022-1	118 - 6
AN4023-1	118A-15
AN4050-1	136 - 1
AN4076-1	76 -25
AN4078-1	113 -11
AN4078-1	114 - 8
AN415-2	36 - 8
AN4284A	46A-28
AN43810A	46 -46
AN4385A	126A-10
AN44-10A	131 -19A
AN44-4A	131 -14
AN44-4A	131 -18
AN44-4A	131 -27
AN44-4A	132 -14
AN44-4A	132 -18
AN44-4A	132 -27
AN486-4	87 -11
AN5-11A	131 -13
AN5-11A	131 -23
AN5-11A	131 -37
AN5-11A	132 -13
AN5-11A	132 -23
AN5-11A	132 -37
AN5-11A	97 -41
AN5-15A	30 -54
AN5-15A	118 -15
AN5-15A	127 -11
AN5-15A	128 -10
AN5-21A	45 -12
AN5-21A	46 -12
AN5-21A	46A-12
AN5-21A	46B-12
AN5-22A	45 -17
AN5-25A	41 -21
AN5-27	48B-44
AN5-27A	45 -16
AN5-31A	46 -16
AN5-31A	46A-16
AN5-32A	127 - 7
AN5-32A	128 - 7
AN5-35A	42A- 4
AN5-36	47 -46
AN5-36	48B-44
AN5-36	46A-17
AN5-36	46B-17
AN5-52A	123B- 2
AN5-6A	17 - 1
AN5-6A	18 - 4
AN5-6A	30 -94

PART NUMBER	FIGURE AND INDEX NO.
AN5-7A	9 -12
AN5-7A	10 -13
AN5-7A	10A-14
AN5-7A	30 -55
AN5-7A	30 -96
AN5-7A	30 -99B
AN5H12	41 -40
AN5H5A	40A-46
AN500-8-8	81 - 3
AN500-8-8	81B- 3
AN500A10-10	80 -44
AN500A10-8	81A- 2
AN500A10-8	81D- 2
AN500A4-4	134 -84
AN500A4-4	134 -98
AN500A4-4	135 -77
AN500A8-4	63A- 2
AN500A8-4	81A-22A
AN500A8-4	81D-22A
AN500A8-4	100 -41
AN500A8-5	40A-38
AN500A8-7	13 -24
AN500A8-8	100 -48
AN500C4-7	135 - 2
AN502-10-14	81 -43
AN502-10-14	81B-43
AN502-10-4	98 -48
AN502-10-6	43 -18
AN503-8-10	79 -23
AN503-8-10	81 -33
AN503-8-10	81B-33
AN503-8-12	81A- 8
AN503-8-12	81A-10
AN503-8-12	81D- 8
AN503-8-12	81D-10
AN503-8-16	81 -35
AN503-8-16	81B-35
AN503-8-6	40A-29
AN503-8-8	81A- 5A
AN503-8-8	81D- 5A
AN505-8R5	44 -50
AN507-1032-10	58 -10
AN507-1032-16	57 -17
AN507-1032R10	57 -36
AN507-1032R10	57A-11
AN507-1032R12	46B-41
AN507-1032R12	49 - 2
AN507-1032R12	50 - 2
AN507-1032R12	87 -27
AN507-1032R12	88A-20C
AN507-1032R12	126 -61
AN507-1032R14	70 -15
AN507-1032R14	120A-43
AN507-1032R14	120B-39
AN507-1032R14	120C-40
AN507-1032R6	126 -63
AN507-1032R8	117A-36
AN507-1032R8	117B- 6
AN507-1032R8	126 -67
AN507-1032R8	127 -60
AN507-428R7	13 -37
AN507-428R7	13 -47
AN507-440-5	135 - 5
AN507-440-5	135 - 7
AN507-632R10	131 - 4
AN507-632R10	132 - 4
AN507-632R12	3 -36
AN507-632R12	3A-34
AN507-632R12	121 - 2
AN507-632R12	122 - 3
AN507-632R14	3 -36
AN507-632R14	3 -47
AN507-632R5	112 - 5
AN507-632R6	51A- 6

PART NUMBER	FIGURE AND INDEX NO.
AN507-632R8	3 -31B
AN507-632R8	3 -46
AN507-632R8	3A-24
AN507-632R8	3A-33
AN507-632R8	68B-37
AN507-632R8	68C-39
AN507-632R8	117E- 3
AN507-632R8	131 - 5
AN507-632R8	132 - 5
AN507-640R4	101 -24
AN507-640R4	102 -21
AN507-832-6	3 -15
AN507-832-6R	111 - 2
AN507-832R12	67 -50
AN507-832R12	68 -49
AN507-832R14	60 - 6
AN507-832R14	61 - 7
AN507-832R14	61A- 7
AN507-832R14	63 - 6
AN507-832R6	3A-41
AN507-832R6	16 -14
AN507-832R6	16 -14
AN507-832R8	3 -31A
AN507-832R8	19 -51
AN507-832R8	68D-13
AN507-832R8	68E- 3
AN507-832R8	134 -38
AN5078G32R12	135 -19
AN5078G632R12	134 -54
AN5078I032R16	117A-34
AN5078632R12	67 -14
AN5078632R12	67 -16
AN5078632R12	67 -19
AN5078632R12	67 -20
AN5078632R12	67 -24
AN5078632R12	67 -25
AN5078632R12	68 -16
AN5078632R12	68 -18
AN5078632R12	68 -21
AN5078632R12	68 -22
AN5078632R12	68 -26
AN5078632R12	68A-39
AN5078632R12	68A-42
AN5078632R12	68A-48
AN5078632R12	68B-38
AN5078632R12	68B-40
AN5078632R12	68B-41
AN5078632R12	68B-42
AN5078632R12	68B-49
AN5078632R12	68C-40
AN5078632R12	68C-43
AN5078632R12	68C-44
AN5078632R12	68C-45
AN5078632R12	116 - 7
AN5078632R12	117 - 7
AN5078632R12	117A- 7
AN5078632R6	68A-48
AN5078632R6	68B-49
AN5078832R12	67 -58
AN5078832R12	68 -57
AN5078832R14	70 -38
AN509-10R14	125A- 2
AN509-10R14	125 - 3
AN509-10R29	21 -15
AN509-10R4	13 - 5
AN509-10R6	13 -36
AN509-10R6	13 -46
AN509-416R12	19 -40
AN509-416R13	19 -41
AN509-8R6	102A- 5
AN510-10R14	125B- 2
AN510-10R16	125 - 4
AN510-10R7	47 - 7B
AN510-10R7	48B- 7B

PART NUMBER	FIGURE AND INDEX NO.
AN510-1032R14	125 - 2
AN5109 4R8	70 -40
AN515-10R10	110A-23
AN515-10R5	105 -56
AN515-10R6	95A-23
AN515-10R6	121 -32
AN515-10R6	122 -32
AN515-10R8	93 -18
AN515-2R10	94A-51
AN515-3R6	123A-10
AN515-4R10	94B-13
AN515-4R10	104 -54
AN515-4R10	105 -64
AN515-4R12	108 -31
AN515-4R4	74 -61
AN515-4R4	75 -44
AN515-4R4	123 - 9
AN515-4R4	123 -32
AN515-6-8	44 -23
AN515-6R10	32A-43
AN515-6R10	32A-46
AN515-6R10	123 -30
AN515-6R22	134 -27
AN515-6R36	55 -19
AN515-6R36	56 -18
AN515-6R4	69 -15
AN515-6R4	69 -22
AN515-6R4	69 -32
AN515-6R5	47 -42
AN515-6R5	48B-40
AN515-6R5	49 -37
AN515-6R5	50 -39
AN515-6R5	120A-11
AN515-6R5	120B-53
AN515-6R5	120C-55
AN515-6R5	131 -52
AN515-6R5	132 -52
AN515-6R5	46A-47
AN515-6R5	46B-54
AN515-6R6	67 -43
AN515-6R6	68 -42
AN515-6R6	68B-50
AN515-6R6	68C-46
AN515-6R6	69 -13
AN515-6R6	69 -29
AN515-6R6	120B-70
AN515-6R6	120C-72
AN515-6R6	124 - 1
AN515-6R8	4 -43
AN515-6R8	14 -33
AN515-6R8	20 -49
AN515-6R8	21 -37
AN515-6R8	24 -81
AN515-6R8	67 -76
AN515-6R8	68 -76
AN515-6R8	68 -78
AN515-6R8	68A-30
AN515-6R8	68B-26
AN515-6R8	68C-28
AN515-6R8	69 - 6
AN515-6R8	76 -83
AN515-6R8	108 -31
AN515-6R8	123A-15
AN515-6R8	124 -13
AN515-6R8	129 -32
AN515-8-14	134 -77
AN515-8-14	135 -70
AN515-8-7	134 -78
AN515-8-7	135 -71
AN515-8R10	41 -43
AN515-8R10	65 -11
AN515-8R10	65 -25
AN515-8R10	65A- 6
AN515-8R10	88A-35

PART NUMBER	FIGURE AND INDEX NO.
AN515-8R10	100A- 6
AN515-8R10	100A-16
AN515-8R10	121 -52
AN515-8R10	122 -50
AN515-8R10	124A-23
AN515-8R11	124A-21
AN515-8R12	124A-27
AN515-8R14	66 -10
AN515-8R18	65 - 8
AN515-8R18	65A- 5
AN515-8R22	90 -15A
AN515-8R24	3 -22
AN515-8R4	40 -39
AN515-8R4	40A-44
AN515-8R4	41 -47
AN515-8R4	89 -28
AN515-8R6	52 -21
AN515-8R6	63C-85
AN515-8R6	94B-20
AN515-8R6	101 -36
AN515-8R6	102 -32
AN515-8R6	102A- 2
AN515-8R6	121 -42
AN515-8R6	122 -41
AN515-8R6	124 -12
AN515-8R6	124A-16
AN515-8R7	3 -24
AN515-8R7	68A-21
AN515-8R7	68B-21
AN515-8R8	3A-35
AN515-8R8	5 -45
AN515-8R8	5 -47
AN515-8R8	6 -45
AN515-8R8	6 -47
AN515-8R8	13 -33
AN515-8R8	14 -33
AN515-8R8	16 -18
AN515-8R8	19 -49
AN515-8R8	20 -49
AN515-8R8	21 -37
AN515-8R8	24 -73
AN515-8R8	27 - 68
AN515-8R8	52 -24
AN515-8R8	57 -35
AN515-8R8	57A-21
AN515-8R8	58 -28
AN515-8R8	65 -29
AN515-8R8	65B- 2
AN515-8R8	66 - 6
AN515-8R8	76 -62
AN515-8R8	88 -37
AN515-8R8	88A-19
AN515-8R8	94B-19
AN515-8R8	95A-10
AN515-8R8	95B- 3
AN515-8R8	95B-33
AN515-8R8	106 -19
AN515-8R8	106 -29
AN515-8R8	120 -13
AN515-8R8	120B-63
AN515-8R8	120C-65
AN515-8R8	124A- 1
AN515-8R8	125C- 4
AN515-8R8	129 -11
AN515-8R8	129 -22
AN515-8R8	131 -72B
AN515-8R8	134 -66
AN515-8R8	134 -75
AN515-8R8	135 -57
AN515-8R8	135 -68
AN515-8R8	135 -79
AN515-8R9	131 -35
AN515-8R9	132 -35
AN515-832R7	13 -23

PART NUMBER	FIGURE AND INDEX NO.
AN515B10R14	67 -79
AN515B10R14	117A-34
AN515B10R16	67 -80
AN515B1014	116 -37
AN515B6-5	77 -17
AN515B6R	68 -72
AN515B6R	68 -73
AN515B6R	68 -79
AN515B6R	68 -80
AN515B6R	119 -12
AN515B6R12	67 -70
AN515B6R12	67 -71
AN515B6R12	67 -72
AN515B6R12	67 -73
AN515B6R12	67 -74
AN515B6R12	68 -70
AN515B6R12	68 -71
AN515B6R12	68 -74
AN515B6R12	68A-31
AN515B6R12	68A-34
AN515B6R12	68A-38
AN515B6R12	68B-34
AN515B6R12	68B-39
AN515B6R12	68C-36
AN515B6R12	68C-41
AN515B6R12	101 - 1
AN515B6R12	101 - 2
AN515B6R12	101 - 3
AN515B6R12	102 - 1
AN515B6R12	102 - 2
AN515B6R12	102 - 3
AN515B6R16	68A-68
AN515B6R16	68B-32
AN515B6R16	68C-34
AN515B6R16	68C-42
AN515B6R16	95B- 1
AN515B6R16	95B-31
AN515B6R6	67 -62
AN515B6R6	68 -61
AN515B6R8	68A-18A
AN515B6R8	68B-18A
AN515B6R8	68C-20
AN515B632R12	70 -21
AN515B632R12	95B-28
AN5156R8	67 -78
AN516-8R14	65 -22
AN520-10-R30	87 - 5
AN520-10-6	48 -38
AN520-10-8	92 -40
AN520-10-8	95A- 4A
AN520-10R10	13 -29
AN520-10R10	52 - 3
AN520-10R10	70 -19C
AN520-10R12	87A-12
AN520-10R12	117D-16
AN520-10R12	126 -58
AN520-10R14	31 - 6
AN520-10R14	136 - 1
AN520-10R16	65 - 1
AN520-10R16	65A- 2
AN520-10R16	133 - 9
AN520-10R22	65 - 1
AN520-10R22	115 -10
AN520-10R28	20 -32
AN520-10R5	104 -64
AN520-10R5	105 -73
AN520-10R5	121 -43
AN520-10R5	122 -42
AN520-10R6	104 -57
AN520-10R6	104 -68
AN520-10R6	105 -66
AN520-10R6	105 -77
AN520-10R6	126 -69
AN520-10R6	126 -71

PART NUMBER	FIGURE AND INDEX NO.
AN520-10R7	3A-36
AN520-10R7	24 -21
AN520-10R7	25 -14
AN520-10R7	30 -39
AN520-10R7	32 -28
AN520-10R7	32A-39
AN520-10R7	35B-18
AN520-10R7	65 -16
AN520-10R7	120 -21
AN520-10R7	120A-25
AN520-10R72	128 -53
AN520-10R8	6A-35
AN520-10R8	6A-36
AN520-10R8	32 -17
AN520-10R8	63 -41
AN520-10R8	63C-31
AN520-10R8	63C-63
AN520-10R8	70 -19E
AN520-10R8	74 -28
AN520-10R8	87A- 9
AN520-10R8	89 -14C
AN520-10R8	101 -43
AN520-10R8	102 -39
AN520-10R8	120A-21
AN520-10R8	120B-29
AN520-10R8	120B-30
AN520-10R8	120C-31
AN520-10R8	121 -29
AN520-10R8	129 -38
AN520-10R8	129 -41
AN520-10R8	129 -52
AN520-10R9	51 -12
AN520-10R9	51A-25
AN520-10R9	131 -50
AN520-10R9	131 -61
AN520-10R9	132 -50
AN520-10R9	132 -61
AN520-10R9	133 - 2
AN520-10R9	133 -26
AN520-416R20	54 - 2
AN520-416R8	121 - 5A
AN520-416R8	121 -50
AN520-416R8	122 - 6A
AN520-416R8	122 -48
AN520-6-8	123A-31
AN520B10R14	67 -80
AN520B10R14	68 -80
AN520B10R16	116 -39
AN520B10R16	117 -35
AN520B10R16	117 -37
AN520B10R16	117A-36
AN520C10R16	134 - 1
AN520C10R16	134 - 8
AN520C10R16	135 -18
AN520C10R16	135 -31
AN525-10R14	71 - 8
AN525-10R14	71 -17
AN525-10R18	51A-13
AN525-10R6	98 -78
AN525-10R6	99A-31
AN525-10R6	101 -52
AN525-10R6	102 -48
AN525-10R8	49 -32
AN525-10R8	50 -30
AN525-416R8	32A-27
AN525-416R9	22 -24
AN525-416R9	23 -27
AN525-8R7	105 -58A
AN525-8R7	106 -21A
AN525-823R8	86 - 3
AN525-832R7	49 -22
AN525-832R7	50 -22
AN525-832R8	103 - 3
AN525-832R8	104 -55

PART NUMBER	FIGURE AND INDEX NO.
AN525-832R8	126A- 2
AN525-832R9	24 -14
AN535-0-2	79 -20
AN545-6R3	65 -21
AN565B4-2	94A-49A
AN565D6H3	93 -17
AN6-10A	30 -97
AN6-11A	98 -44
AN6-11A	99A- 5
AN6-21A	76 -11
AN6-24A	74 - 3
AN6-24A	75 - 3A
AN6-25A	41 -18
AN6-25A	75 - 3
AN6-26A	75 - 3
AN6-26A	75 - 3
AN6-33A	75 - 2A
AN6-34A	75 - 2
AN6-35A	75 - 2
AN6-35A	75 - 2
AN6-6A	30 -95
AN6-7A	17 - 5
AN6-7A	18 - 1
AN6-7A	18 - 7
AN6-7A	30 -98
AN6227-11	113A-24
AN6227-15	40A-24
AN6227-17	40A-28
AN6227B1	135 - 7
AN6227B23	42 -24
AN6227B23	42C-23
AN6227B27	42A-18
AN6227B9	81 -40
AN6227B9	81B-40
AN6230B2	43 -10
AN6230B2	44 -45
AN6230B3	43 -11
AN6230B3	44 -46
AN6289D10	113 -26
AN6289D10	115 - 4
AN6328-8Z3	5 -27
AN6328-8Z3	6 -27
AN665-34R	70A-17
AN7-20A	40 - 9
AN7-20A	40A- 9
AN7-20A	41 - 9
AN7-24A	3 - 4
AN7-24A	3A- 4
AN7-33A	76 - 8
AN7-33A	77 - 6
AN7-40A	121 -35
AN7-40A	122 -34
AN735D36	76 -33
AN735D36	117D-16
AN737RM22	134 - 7
AN737RM22	134 -16
AN737RM22	135 -26
AN737RM22	135 -30
AN737RM30	13 -17A
AN737TW91	108 -25
AN741-18P	74 -31
AN741-18P	75 -25
AN741TD7	74 -62
AN741TD7	75 -45
AN741T5	96 -45
AN742D12	68A-48
AN742D12	68B-49
AN742D12	68C-45
AN742D12	76 -38
AN742D12	89 -14C
AN742D12	117 -18
AN742D14	76 -26
AN742D14	136 -17
AN742D16	88 -13

PART NUMBER	FIGURE AND INDEX NO.
AN742D16	88A-31
AN742D2	32 -35
AN742D2	95A-23
AN742D3	68 -27
AN742D3	74 -21
AN742D3	75 -12
AN742D3	89 - 8C
AN742D3	89 -14
AN742D3	89 -14B
AN742D3	90 -15A
AN742D3	92 -40
AN742D3	109 -11
AN742D3	110 -18
AN742D3	110 -21
AN742D3	110A-22
AN742D32	113 -12
AN742D32	114 - 9
AN742D36	74 -91
AN742D36	76 -37
AN742D36	76 -45A
AN742D36	77 -61B
AN742D4	4 -43
AN742D4	5 - 4
AN742D4	6 - 4
AN742D4	6A-48
AN742D4	6A-49
AN742D4	74 -62
AN742D4	75 -13
AN742D4	75 -41
AN742D4	75 -42
AN742D4	75 -45
AN742D4	104 -63
AN742D4	104 -66
AN742D4	104 -67
AN742D4	105 -72
AN742D4	105 -75
AN742D4	105 -76
AN742D4	107 -10
AN742D4	114 -22
AN742D4	126 -77
AN742D5	120A-24
AN742D5	120B-30
AN742D5	120C-31
AN742D50	76 -45A
AN742D50	77 -61A
AN742D6	13 - 6C
AN742D6	95A- 4A
AN742D6	95A- 9
AN742D6	103 -21
AN742D6	103 -27
AN742D6	104 -18
AN742D6	104 -24
AN742D6	105 -16
AN742D6	105 -22
AN742D6	106 -15
AN742D8	13 - 6C
AN742D8	102B- 4
AN742D8	117 -15
AN742D8	117 -17
AN742D8	136 -17
AN742D8	136 -18
AN743-12	101 -34B
AN75A10	44 -37
AN76-11	41 -41
AN775-4	41 -46
AN776-4D	41 -46
AN780-2	118 - 1
AN780-2	118 - 2
AN780-2	118 - 5
AN780-2	118 - 6
AN8-17A	16 - 3
AN8-23A	3 - 1
AN8-23A	3A- 1
AN8-25A	16 - 2

PART NUMBER	FIGURE AND INDEX NO.
AN815-10D	113 -33
AN815-3D	90 -10
AN815-4D	40 -14
AN815-4D	40A-14
AN815-4D	41 -45
AN815-4D	90 -10
AN815-6D	103 -10
AN815-6D	103 -22
AN815-6D	103 -24
AN815-6D	103 -28
AN815-6D	103 -39
AN815-6D	104 - 8
AN815-6D	104 -19
AN815-6D	104 -21
AN815-6D	104 -25
AN815-6D	105 - 8
AN815-6D	105 -17
AN815-6D	105 -19
AN815-6D	105 -23
AN815-6D	106 - 8
AN815-6D	106 -14
AN815-6D	108 -15
AN815-8D	105 -51A
AN815-8D	106 -36
AN816-2D	67 -17
AN816-2D	68 -19
AN816-2D	74 -40
AN816-2D	74 -54
AN816-2D	110 -14
AN816-2D	116 -31
AN816-2D	117 -29
AN816-2D	118 - 8
AN816-2D	118A-17
AN816-2D	134 -53
AN816-2D	135 -24
AN816-2D	113 -18D
AN816-3B	120B-22
AN816-3B	120C-25
AN816-3D	40 -15C
AN816-3D	68 -89
AN816-3D	119 -14
AN816-3D	120A-13
AN816-3D	120A-31
AN816-3D	120A-37
AN816-3D	120B-14
AN816-3D	120B-24
AN816-3D	120C-14
AN816-3D	120C-27
AN816-4	113 -43
AN816-4D	40 -15A
AN816-4D	42 -36
AN816-4D	95B-27
AN816-4D	105 -28C
AN816-4D	113 -17
AN816-4D	113 -21
AN816-4D	114 -14
AN816-4D	114 -18
AN816-4D	117B-29
AN816-4D	117C-15
AN816-4D	117E-21
AN816-4D	113 -18B
AN816-5D	119 -20
AN816-6-6D	105 -54
AN816-6-6D	108 - 8
AN816-6-8D	116 -20
AN816-6D	103 -41
AN816-6D	108 - 7
AN816-6D	117B-53
AN816-6D	117C- 7
AN816-6D	117C-10
AN816-6D	117E- 5
AN816-8D	105 -54
AN816-8D	110 - 1
AN818-4D	104 -30C

PART NUMBER	FIGURE AND INDEX NO.
AN818-6D	13 -10
AN821-6D	103 - 5
AN821-6D	104 - 3
AN821-6D	105 - 3
AN821-6D	105 -26
AN821-6D	106 - 5
AN821-6D	106 -16
AN824-6D	103 -35
AN824-6D	104 -28
AN824-6D	106 - 9
AN832-2D	33 -28
AN832-2D	33 -32
AN832-2D	74 -49
AN832-2D	85 -15
AN832-2D	118A- 7
AN832-3D	33 -32
AN832-3D	74 -49
AN832-6D	108 -16
AN833-10D	113 -25
AN833-10D	115 - 3
AN833-2D	33 -27
AN833-2D	74 -41
AN833-2D	106 -40
AN833-2D	118A- 7
AN833-3D	90 - 6
AN833-3D	90 -13
AN833-4D	33 -23
AN833-4D	41 -14
AN833-4D	74 -45
AN833-4D	90 - 6
AN833-4D	90 -13
AN833-4D	104 -30E
AN833-4D	105 -28E
AN833-4D	107 - 9
AN833-4D	107 -13
AN833-4D	113 - 4
AN833-6D	103 -31
AN834-2D	33 -30
AN834-2D	77 -40
AN834-2D	118A- 8
AN834-6D	103 -11
AN834-6D	103 -30
AN837-2D	33 -38
AN837-3D	90 - 7
AN837-4D	90 - 7
AN837-4D	114 - 4
AN837-4D	127 -39
AN837-4D	128 -37
AN837-6D	103 -31
AN842-6D	134 -11
AN842-8	116 -16
AN842-8	117 -20
AN842-8	117D-12
AN842-8	136 - 7
AN844-6D	134 - 5
AN844-8	116 - 9
AN844-8	117 - 9
AN844-8	117A- 9
AN844-8	136 -11
AN844-8D	117D-11
AN900-10	74 -38
AN900-10	76 -66
AN900-10	114 -37
AN901-4C	41 -46
AN910-1D	40 -15B
AN910-1D	101 -41
AN910-1D	102 -37
AN910-2D	76 -70
AN911-1D	101 -34
AN911-1D	102 -30A
AN911-1D	107 -20
AN911-1D	120A-16
AN911-1D	120B- 2
AN911-1D	120C- 2

PART NUMBER	FIGURE AND INDEX NO.
AN911-1D	113 -18C
AN912-1	104 -30A
AN912-1	105 -28A
AN912-1D	107 -21
AN912-1D	116 -29
AN912-1D	117 -27
AN912-1D	134 -51
AN912-1D	135 -22
AN912-2	117 -41
AN912-2	136 -22
AN912-2D	95B-23
AN912-3	76 -52
AN912-3	77 -54
AN912-3	113 - 8
AN914-1D	113 -18E
AN915-1D	40 -15A
AN915-1D	40A-15A
AN915-2	106 -46
AN916-1D	101 -33
AN916-1D	102 -30
AN917-1D	120A-14
AN917-1D	120B-25
AN917-1D	120C-28
AN917-1D	113 -18A
AN917-2D	107 -19
AN917-3D	105 -54
AN918-1D	120A-32
AN918-1D	120B-10
AN918-1D	120C-10
AN921-3D	90 - 3
AN921-4D	90 - 3
AN921-4D	93 -11
AN924-10D	117E-29
AN924-2D	33 -28
AN924-2D	33 -28
AN924-2D	74 -43
AN924-2D	74 -51
AN924-2D	77 -40
AN924-2D	85 -16
AN924-2D	106 -40
AN924-2D	118A-10
AN924-3D	33 -32
AN924-3D	74 -51
AN924-3D	90 - 3A
AN924-3D	90 - 9
AN924-3D	90 -15
AN924-4	127 -43
AN924-4D	33 -23
AN924-4D	41 -16
AN924-4D	74 -47
AN924-4D	90 - 3A
AN924-4D	90 - 9
AN924-4D	90 -15
AN924-4D	93 -13
AN924-4D	103 -43
AN924-4D	104 -30
AN924-4D	104 -30E
AN924-4D	105 -28
AN924-4D	105 -28E
AN924-4D	107 -12
AN924-4D	113 - 6
AN924-4D	113 -40
AN924-4D	114 - 4
AN924-4D	127 -39
AN924-4D	128 -37
AN924-6D	103 -11
AN924-6D	103 -31
AN924-6D	116 -24
AN924-6D	117 -45
AN924-6D	117D- 1
AN924-6D	136 -26
AN929-6	103 -11
AN929-6	103 -32
AN932-52	120B-19

PART NUMBER	FIGURE AND INDEX NO.
AN932C2	120C- 7
AN932C2	120C-22
AN932C4	113A-22
AN932C4	113A-34
AN932D2	120A-18
AN932D2	120B- 7
AN932S2	120A- 1C
AN935-10	79 - 4
AN935-10	79 -29
AN935-10	123B-17
AN935-10	133 - 9
AN935-10L	81 -44
AN935-10L	81B-44
AN935-10L	136 - 1
AN935-416	44 -30
AN935-8L	79 -24
AN935-8L	81 -34
AN935-8L	81B-34
AN936A10	10R - 6
AN936A10	110A- 1
AN936A10	110A-28
AN936A10	121 -43
AN936A4	94B-13
AN936A416	60 -26
AN936A416	61 -28
AN936A416	61A-28
AN936A416	117D-17A
AN936A416	123B-19
AN936A6	44 -24
AN936A6	68A-30
AN936A6	68B-26
AN936A6	68C-28
AN936A68	67 -20
AN936A68	68 -22
AN936A68	68A-39
AN936A68	68A-40
AN936A68	68A-42
AN936A68	68B-40
AN936A68	68B-41
AN936A68	68B-42
AN936A68	68C-43
AN936A68	68C-44
AN936A68	77 -17
AN936A68	95B- 1
AN936A68	95B-31
AN936A616	60 -27
AN936A616	61 -29
AN936A616	61A-28
AN936A8	40 -40
AN936A8	40A-45
AN936A8	41 -47
AN936A8	67 -50
AN936A8	67 -55
AN936A8	68A-10
AN936A8	68A-21
AN936A8	68B-11
AN936A8	68B-21
AN936A8	68C-14
AN936A8	81 - 4
AN936A8	81B- 4
AN936A8	89 -28
AN936A8	94B-21
AN936A8	105 -58B
AN936A8	106 -21B
AN936A8	124A-17
AN936B10	51 -13
AN936B10	74 -33
AN936B10	75 -25
AN936B10	129 - 3
AN936B416	87 - 3
AN936B416	119 -18
AN936B6	67 -70
AN936B6	67 -71
AN936B6	101 - 2

PART NUMBER	FIGURE AND INDEX NO.
AN936C10	44 -49
AN936C8	68 -54
AN960-10	6A-26
AN960-10	15 -10
AN960-10	22 - 9
AN960-10	30 - 3
AN960-10	30 -61
AN960-10	30 -69
AN960-10	30 -99C
AN960-10	32 - 2
AN960-10	32 - 7
AN960-10	32A- 2
AN960-10	32A- 7
AN960-10	38 -28
AN960-10	52 - 4
AN960-10	62 -42
AN960-10	62 -55
AN960-10	62 -63
AN960-10	63 -44
AN960-10	63C-39
AN960-10	63C-71
AN960-10	65 - 3
AN960-10	74 -29
AN960-10	74 -68
AN960-10	74 -76
AN960-10	74 -86
AN960-10	82 - 4
AN960-10	82 -10
AN960-10	87 -24
AN960-10	91 -20
AN960-10	92 -17
AN960-10	94A-16
AN960-10	95A-19
AN960-10	96 -40
AN960-10	96 -48
AN960-10	104 -39
AN960-10	109 -15
AN960-10	110 -23
AN960-10	120A-26
AN960-10	120B-31
AN960-10	120C-32
AN960-10	126A- 8
AN960-10	127 -38
AN960-10	127 -49
AN960-10	128 -36
AN960-10	128 -45
AN960-10	134 -88
AN960-10	134 -92
AN960-10	134 -96
AN960-10	134 -99F
AN960-10	135 -83
AN960-10	97 -42
AN960-10L	3 -48
AN960-10L	20 -17
AN960-10L	30 - 7
AN960-10L	40A-37
AN960-10L	46 -41
AN960-10L	49 - 5
AN960-10L	50 - 5
AN960-10L	60 - 8
AN960-10L	60 -34
AN960-10L	61 - 9
AN960-10L	61 -36
AN960-10L	61A- 9
AN960-10L	61A-35
AN960-10L	63 - 8
AN960-10L	63 -42
AN960-10L	63 -72
AN960-10L	63A- 6
AN960-10L	63A-13
AN960-10L	63A-21
AN960-10L	63A-21C
AN960-10L	63B-19
AN960-10L	63C- 3

PART NUMBER	FIGURE AND INDEX NO.
AN960-10L	63C- 5
AN960-10L	63C-32
AN960-10L	63C-64
AN960-10L	63C-77
AN960-10L	63C-92
AN960-10L	74 -11
AN960-10L	74 -19
AN960-10L	74 -62
AN960-10L	74 -65
AN960-10L	74 -92
AN960-10L	74 -94
AN960-10L	75 -16
AN960-10L	75 -45
AN960-10L	76 -39
AN960-10L	77 -33
AN960-10L	78 -13
AN960-10L	78A-13
AN960-10L	87 - 6
AN960-10L	87 -10
AN960-10L	87 -30
AN960-10L	87 -35
AN960-10L	88 -23
AN960-10L	88A- 8
AN960-10L	89 -13
AN960-10L	90 -45
AN960-10L	91 -17A
AN960-10L	95 -60
AN960-10L	98 -42
AN960-10L	98 -49
AN960-10L	98 -58
AN960-10L	98 -60
AN960-10L	99A- 3
AN960-10L	99A-11
AN960-10L	99A-18
AN960-10L	100 -32
AN960-10L	103 -46
AN960-10L	104 -31
AN960-10L	104 -61
AN960-10L	105 -29
AN960-10L	105 -37
AN960-10L	105 -70
AN960-10L	113 -14
AN960-10L	114 -11
AN960-10L	119 -21
AN960-10L	121 -57
AN960-10L	121 -59
AN960-10L	122 -55
AN960-10L	122 -57
AN960-10L	129 - 4
AN960-10L	129 -29
AN960-10L	134 -81
AN960-10L	135 -74
AN960-1416L	117A-40
AN960-2	109 -17
AN960-2	110 -26
AN960-4	8A-10
AN960-4	90 -41
AN960-4	97 -62
AN960-4	113 -37
AN960-4	115 -14
AN960-4	134 -84
AN960-4	134 -98
AN960-4	135 -77
AN960-4L	73 -41D
AN960-4L	73A-47
AN960-4L	135 - 3
AN960-416	19 - 3
AN960-416	19 -42
AN960-416	20 - 2
AN960-416	35B-31
AN960-416	38 -12
AN960-416	38 -16
AN960-416	40 - 5
AN960-416	40A- 5

PART NUMBER	FIGURE AND INDEX NO.
AN960-416	41 - 5
AN960-416	42 -20
AN960-416	42C-19
AN960-416	43 - 4
AN960-416	44 -14
AN960-416	46 -22
AN960-416	46 -47
AN960-416	46A-52
AN960-416	61A-56A
AN960-416	63 -62
AN960-416	63 -83A
AN960-416	63C-98A
AN960-416	64 -17
AN960-416	65B- 4
AN960-416	65B- 8
AN960-416	70 - 5B
AN960-416	94A- 5
AN960-416	95 -45
AN960-416	95 -71
AN960-416	95 -71
AN960-416	96 - 6
AN960-416	96 -22
AN960-416	96 -28
AN960-416	96 -43
AN960-416	97 -32
AN960-416	100 -20
AN960-416	110A-20
AN960-416	113 -38
AN960-416	115 -15
AN960-416	117D-178
AN960-416	121 - 8
AN960-416	121 -30
AN960-416	122 - 9
AN960-416	122 -31
AN960-416	126 -10
AN960-416	127 - 6
AN960-416	128 - 5
AN960-416	131 -17
AN960-416	131 -32
AN960-416	132 -17
AN960-416	132 -32
AN960-416L	21 - 2
AN960-416L	42 -32
AN960-416L	42A-25
AN960-416L	42C-31
AN960-416L	44 -11
AN960-416L	59A- 3
AN960-416L	62 - 5
AN960-416L	63C-13
AN960-416L	63C-17
AN960-416L	64A-22
AN960-416L	74 -97
AN960-416L	75 -40
AN960-416L	87 -17
AN960-416L	94 - 3
AN960-416L	94A- 4
AN960-416L	95 -25
AN960-416L	95 -50
AN960-416L	98 -20
AN960-416L	99 -20
AN960-416L	100 -26
AN960-416L	103 -41
AN960-416L	103 -43
AN960-416L	104 -30
AN960-416L	105 -28
AN960-416L	107 - 3
AN960-416L	107 -26
AN960-416L	108 - 4
AN960-416L	108 -28
AN960-416L	110 - 5
AN960-516	9 -13
AN960-516	10 -14
AN960-516	10A-15
AN960-516	17 - 2

PART NUMBER	FIGURE AND INDEX NO.
AN960-516	18 - 5
AN960-516	40A-19
AN960-516	40A-47
AN960-516	41 -22
AN960-516	41 -40
AN960-516	42A- 5
AN960-516	44 -38
AN960-516	45 -13
AN960-516	45 -17A
AN960-516	46 -13
AN960-516	46 -17
AN960-516	46 -31
AN960-516	46A-13
AN960-516	46A-18
AN960-516	46A-18A
AN960-516	46A-61
AN960-516	46B-13
AN960-516	46B-18
AN960-516	74 -82
AN960-516	78 - 6A
AN960-516	78 - 6B
AN960-516	78 -22
AN960-516	87 -23
AN960-516	127 -12
AN960-516	17 - 3
AN960-516	18 - 5A
AN960-516	97 -42
AN960-516L	30 -56
AN960-516L	30 -93
AN960-516L	30 -94
AN960-516L	30 -96
AN960-516L	30 -99B
AN960-516L	47 -48
AN960-516L	48B-46
AN960-516L	78 -22
AN960-516L	78A- 6
AN960-516L	98 -63
AN960-516L	99A-14
AN960-516L	118A- 9
AN960-516L	131 -13
AN960-516L	131 -14
AN960-516L	131 -19
AN960-516L	131 -19A
AN960-516L	131 -24
AN960-516L	131 -29
AN960-516L	131 -33
AN960-516L	132 -13
AN960-516L	132 -14
AN960-516L	132 -19
AN960-516L	132 -24
AN960-516L	132 -29
AN960-516L	132 -33
AN960-516L	46A-19A
AN960-516L	46B-18A
AN960-6	106 -26
AN960-6	123A-17
AN960-6L	67 -76
AN960-6L	67 -78
AN960-6L	68 -76
AN960-6L	68 -78
AN960-6L	123 -30
AN960-6L	124 - 2
AN960-6L	134 -27
AN960-616	17 - 6
AN960-616	18 - 2
AN960-616	18 - 2
AN960-616	18 - 8
AN960-616	40A-20
AN960-616	41 -19
AN960-616	46B-45
AN960-616	74 - 6
AN960-616	76 -11
AN960-616L	18 - 2
AN960-616L	30 -95

PART NUMBER	FIGURE AND INDEX NO.
AN960-616L	30 -97
AN960-616L	30 -98
AN960-616L	41 -41
AN960-616L	42 -35
AN960-616L	42C-34
AN960-616L	44 - 5
AN960-616L	46B-45
AN960-616L	63 -55
AN960-616L	90 - 8
AN960-616L	90 -14
AN960-616L	108 - 9
AN960-716	3 - 5
AN960-716	3A- 5
AN960-716	62 -46
AN960-716	121 -36
AN960-716	122 -35
AN960-716L	77 - 7
AN960-716L	90 - 8
AN960-716L	90 -14
AN960-8	63C-88
AN960-8	65 -12
AN960-8	65 -26
AN960-8	81A-22B
AN960-8	81D-22B
AN960-8	88A-35
AN960-8	129 -11
AN960-8	129 -22
AN960-8	134 -39
AN960-8	134 -66
AN960-8	134 -75
AN960-8	134 -79
AN960-8	135 -57
AN960-8	135 -68
AN960-8	135 -72
AN960-8	135 -77
AN960-8	135 -79
AN960-8L	19 -50
AN960-8L	24 -14
AN960-8L	40A-30
AN960-8L	65A- 5
AN960-8L	65A- 6
AN960-8L	76 -62
AN960-8L	129 -24
AN960-816	3 - 2
AN960-816	3A- 2
AN960-816	16 - 2
AN960-816	47 - 6
AN960-816	48 - 3
AN960-816	48 -24
AN960-816	48 -26
AN960-816	48A- 3
AN960-816	48A-24
AN960-816	48B- 6
AN960-816	94 -10
AN960-816L	47 -26
AN960-816L	48B-24
AN960-816L	94A-13
AN960-816L	94A-29
AN960A816L	94 -11
AN960C10	90 -25
AN960C10L	90 -25
AN960C416L	54 - 2
AN960C416L	60 -43
AN960C416L	75 -36
AN960C416L	100A- 1
AN960C416L	112 - 9
AN960C616L	59A-29
AN960C616L	62 -36
AN960C616L	62 -67
AN960D10	59A-38
AN960D10	62 -11
AN960D10	70 -44
AN960D10	74 -27
AN960D10	75 -21

PART NUMBER	FIGURE AND INDEX NO.
AN960D10	98 -46
AN960D10	101 -44
AN960D10	102 -40
AN960D10	120 -22
AN960D10	87 -14
AN960D10L	51A- 9
AN960D10L	70B- 3
AN960D10L	70B- 7
AN960D10L	70B- 7
AN960D10L	70B-11
AN960D10L	116 - 4
AN960D10L	117 - 4
AN960D10L	117A- 4
AN960D10L	136 - 4
AN960D1416L	117E-30
AN960D416	84 -57
AN960D416	85 -44
AN960D516	74 -42
AN960D516	74 -50
AN960D516	77 -40
AN960D516	85 -17
AN960D516	106 -40
AN960D516	128 -11
AN960D516L	73 -47A
AN960D516L	73A-57
AN960D516L	131 -37
AN960D516L	132 -37
AN960D616	63 -78
AN960D616	74 -50
AN960D716	74 -46
AN960D716	113 - 5
AN960D716	114 - 4
AN960D716L	127 -39
AN960D716L	128 -37
AN960D916	116 -23
AN960D916	117 -44
AN960D916	117D- 2
AN960D916	136 -25
AN960PD10	71 - 9
AN960PD10	71 -18
AN960PD10	76 -41A
AN960PD10	76 -88
AN960PD10	126A-16
AN960PD10L	46B-48
AN960PD10L	76 -74
AN960PD10L	76 -90
AN960PD10L	105 -56
AN960PD416	76 -77
AN960PD416	126A-10
AN960PD6L	32A-43
AN960PD6L	32A-46
AN960PD6L	94A-34
AN960PD6L	94A-39
AN960PD8L	74 -99
AN970-3	59 -26
AN970-3	59 -30
AN970-3	60 -58
AN970-3	61 -60
AN970-3	61A-60
AN970-3	63 -88
AN970-3	63C-99C
AN970-3	115 -10
AN970-3	120A-40
AN970-3	120B-36
AN970-3	120C-37
AN970-3	123A-22
AN970-3	126 -59
AN970-3	128 -53
AN970-4	75 -37
AN970-5	70 -12
AN970-5	95A-12
AV281371	107 - 5
A1049-873	86 - 8
A1104	3 -35A

PART NUMBER	FIGURE AND INDEX NO.
A1105	135 - 4
A1106	135 - 4
A1108	135 - 4
A1213	135 -11
A1257A	3 -33
A1257A	3A-27
A1272	134 -76
A1280-2	3 -34
A1280-2	3A-25
A1280-3	3 -34
A1280-3	3A-25
A1396	134 -81
A1561-2	72 -35
A1561-2	71 - 2
A1561-4	72 -35
A1561-6	72 -35
A1580	72A-18
A1580	72B-18
A1633-12	72 -22
A1633-12	72A-33
A1633-12	72B-33
A1633-12	72C-22
A1633-13	72 - 8
A1633-13	72A-14
A1633-13	72B-14
A1633-3	72 - 2
A1633-3	72A- 2
A1633-3	72B- 2
A1633-3	72C- 7
A1633-3	71 - 6
A1633-36	81A- 5
A1633-36	81D- 5
A1633-37	72C-44
A1633-47	42B-32
A1633-48	42B-26
A1633-9	72 -29
A1633-9	72 -34
A1633-9	72A-40
A1633-9	72A-45
A1633-9	72B-40
A1633-9	72B-45
A1633-9	72C-29
A1634-4	72 - 9
A1634-5	72A-20
A1634-5	72B-20
A1634-6	72C-41
A1635-16	72 - 4
A1635-16	72A- 4
A1635-16	72B- 4
A1635-17	72 - 4
A1635-17	72A- 4
A1635-17	72B- 4
A1635-18	72 - 4
A1635-18	72A- 4
A1635-18	72B- 4
A1635-19	72 - 4
A1635-19	72A- 4
A1635-19	72B- 4
A1635-21	72 - 4
A1635-21	72A- 4
A1635-21	72B- 4
A1635-22	72 - 4
A1635-22	72A- 4
A1635-22	72B- 4
A1635-27	72A- 8
A1635-27	72B- 8
A1635-36	72C- 9
A1635-37	72C- 9
A1635-40	72C- 9
A1635-56	72C- 9
A1635-65	72 -18
A1635-65	72A-29
A1635-65	72B-29
A1635-66	72C-28

PART NUMBER	FIGURE AND INDEX NO.
A1635-67	72C- 9
A1635-68	72C- 9
A1635-70	72C-15
A1636-24	42B-14
A1636-6	72 - 7
A1636-6	72A-11
A1636-6	72B-11
A1636-7	72 -24
A1636-7	72A-35
A1636-7	72B-35
A1636-7	72C-20
A1638-15	42B-21
A1638-15	42B-24
A1638-16	42B-17
A1638-2	71 - 4
A1638-2	72C- 3
A1638-5	72A- 9
A1638-5	72B- 9
A1638-9	72 -19
A1638-9	72A-30
A1638-9	72B-30
A1639-14	42B-18
A1639-2	72 - 1
A1639-2	72A- 1
A1639-2	72B- 1
A1639-2	72C- 2
A1639-2	71 - 5
A1639-23	72C-10
A1639-26	42B-22
A1742	72 -10
A1748	135 -69
A1793-6Z3	88 - 5
A1804-6Z3	119 -29
A1882	72 -13
A1883	72 -12
A1934	72 -29
A1934	72A-40
A1934	72B-40
A1935	72 -31
A1935	72A-42
A1935	72B-42
A1936	72 -30
A1936	72A-41
A1936	72B-41
A1937	72C-30
A1937	72 -33
A1937	72A-44
A1937	72B-44
A1938	72 -20
A1938	72A-31
A1938	72B-31
A1958	72 - 6
A1958	72A- 6
A1958	72B- 6
A20022	81A-27
A20022	81D-27
A20026	81A-34
A20026	81D-34
A20027	81A-35
A20027	81D-35
A20034	81A- 9
A20034	81D- 9
A20063B	81A-23
A20063B	81D-23
A20064A	81A-24
A20064A	81D-24
A20068	81A-19
A20068	81D-19
A20069-1	81A-17
A20069-4	81D-17
A20071	81A-15
A20071	81D-15
A20072A	81A-26
A20072A	81D-26

PART NUMBER	FIGURE AND INDEX NO.
A20079	81A-29
A20078	81D-29
A20079	81A-30
A20079	81D-30
A20081	81A-31
A20081	81D-31
A20084F	81A-21
A20084F	81D-21
A20086	81A-16
A20086	81D-16
A20107	81A- 4
A20107	81D- 4
A20199	81A- 7
A20199	81D- 7
A20238	81A-22
A20238	81D-22
A20239	81A-25
A20239	81D-25
A20265	81A-13
A20265	81D-13
A20266	81A-11
A20266	81D-11
A2104	72 - 3
A2108	72C-21
A2108	72 -25
A2108	72A-36
A2108	72B-36
A2109-3	39 -10
A2230	72 -38
A2230	72A-48
A2230	72B-48
A2230	72C- 5
A2351	72 -23
A2351	72A-34
A2351	72B-34
A2351	72C-34
A2356	72 -16
A2356	72A-27
A2356	72B-27
A2423	72A- 3
A2423	72B- 3
A2513-49	42B-23
A2513-67	42B-16
A2713-2	72 -35
A2713-4	72 -35
A2713-6	72 -35
A2714	72 -36
A30010	42B- 9
A30011	42B-12
A30013	42B-13
A30014	42B-11
A30015	42B-10
A30023	42B-20
A30040	42B-35
A30079-1	42B- 4
A30079-2	42B- 8
A30085	42B-34
A30087	42B-29
A30087	42B-31
A30169	42B-33
A3047	72 -37
A3047	72A-47
A3047	72B-47
A3047	71 - 3
A3047-30	72 -37
A3047-30	72A-47
A3047-30	72B-47
A3047-45	72 -37
A3047-45	72A-47
A3047-45	72B-47
A3053-14-27	100 -56
A3100	72A-16
A3100	72B-16
A3110	72A-15

PART NUMBER	FIGURE AND INDEX NO.
A3110	72B-15
A3124	72 -27
A3124	72A-38
A3124	72B-38
A3124	72C-32
A3125	72 -26
A3125	72A-37
A3125	72B-37
A3125	72C-33
A3149	72A-17
A3149	72B-17
A3150-5	72C-25
A3150-8	81A-14
A3150-8	81D-14
A3217	72 -15
A3217	72A-26
A3217	72B-26
A3493-012-1	121 -26
A3493-012-1	122 -23A
A3493-012-1	124A-19
A3902	72C-26
A3906	72C- 8
A39070	42A-13
A4001	72C- 6
A4050	47 -36
A4050	48A-30
A4050	48 -18
A4050	48A-18
A4050 #	47 -21
A4050 #	48B-19
A4050 #	48B-31
A4138	47 -37
A4138	48A-31
A4138	48 - 5
A4138	48A- 5
A4138 #	47 - 6
A4138 #	48B- 6
A4138 #	48B-32
A427	134 -84
A427	135 -77
A4427	72C-36
A4513-1	39 - 8
A482	134 - 4
A482	134 -10
A482	135 -12
A482	135 -44
A5-35PR	73 -44
A5-35PR	73 -45A
A5-35PR	73A-54
A615	74 -99
A6194-8Z1	17 -23
A6194-9Z1	18 -27
A6204-8Z3	8A- 7
A654-5	134 -23
A654-5	134 -43
A654-6	134 -24
A654-6	134 -44
A7512-12	3 -32
A7512-12	3A-26
A76	107 - 5
A8002	94A-50
A8818-10Z1	70A-22
A911	135 - 8
A9167-21	134 -33
A960-416L	65A-10
A978	134 -63
A978	134 -67
A978	134 -68
A978	134 -89
A978	134 -93
A978	134 -94
A978	135 -27
A979	134 -18
A979	134 -58

PART NUMBER	FIGURE AND INDEX NO.
A979	134 -6C
B1	53 -22
B1	54 - 4
B1	55 -20
B1	57 -35
B1	58 -28
B1316	81 -18
B1316	81B-18
B1341-8	134 -83
B1341-8	135 -76
B1610	135 -15
B1965	72 -21
B1965	72A-32
B1965	72B-32
B20040	81A-18
B20040	81D-18
B20055	81A- 6
B20055	81D- 6
B20066	81A-12
B20066	81D-12
B20076	81A-28
B20076	81D-28
B20077	81A-32
B20077	81D-32
B20082	81A-33
B20082	81D-33
B20085-1	81A- 5
B20085-4	81D- 5
B2289-1	72 -11
B2289-2	72 -11
B2289-3	72 -11
B2345	72 -28
B2345	72A-39
B2345	72B-39
B2345	72C-31
B2417	72A- 7
B2417	72B- 7
B2420-4	72A-12
B2420-4	72B-12
B2420-6	72A-12
B2420-6	72B-12
B2421-10	72A-13
B2421-10	72B-13
B2421-12	72A-13
B2421-12	72B-13
B2421-14	72A-13
B2421-14	72B-13
B2421-16	72A-13
B2421-16	72B-13
B2421-18	72A-13
B2421-18	72B-13
B2421-20	72A-13
B2421-20	72B-13
B2421-8	72A-13
B2421-8	72B-13
B2422-1	72A-10
B2422-1	72B-10
B296-17	135 -13
B296-18	135 -14
B296-20	134 -45
B296-4	135 -39
B296-5	135 -38
B296-50	134 -21
B296-51	134 -22
B296-52	134 -25
B296-53	134 -26
B296-58	134 - 3
B296-58	135 -32
B296-59	134 - 2
B296-59	135 -33
B296-61	134 - 9
B296-7	135 - 9
B296-8	135 -10
B30026	42B-29

PART NUMBER	FIGURE AND INDEX NO.
B30026	42B-31
B30027	42B-30
B30076	42B- 5
B30107-1	42B-27
B30107-2	42B-27
B30113	42B-28
B30161	42B-25
B30279-1	42B-27
B30279-2	42B-27
B3099	72A-46
B3099	72B-46
B3099	71 - 2
B3216	72 -14
B3216	72A-25
B3216	72B-25
B3414	72C-24
B3526	72C-19
B3905	72C-27
B3909	72C-11
B39094	42 -10
B39094	42C- 9
B3920	72C- 4
B4014	72C-42
B4016	72C-12
B4026	72C-13
B4139	72C-18
B4277-10	72C-38
B4277-12	72C-38
B4277-14	72C-38
B4277-16	72C-38
B4277-18	72C-38
B4277-20	72C-38
B4277-3	72C-38
B4277-4	72C-38
B4277-5	72C-38
B4277-6	72C-38
B4277-7	72C-38
B4277-8	72C-38
B4342	72C-16
B4354-2	72C-17
B4354-3	72C-17
B4407	72C-37
B4407-1	72C-37
B4407-2	72C-37
B4409	72C-39
B4426	72C-35
B45	100A- 8
B45	100A-17
B610	14 - 8
B610	15 - 6
B610	94 -17
B610	94A- 7
B804-2	134 -41
B804-3	134 -42
CA2	67 -50
CA2	68 -49
CA2	68A-29
CA2	68B-25
CA2	68C-27
CA2	68D-13
CA2	68E- 3
CM2629N1	67 -74
CM2629N1	68 -73
CM2647N1	67 -70
CM2647N1	68 -70
CM2647N1	68B-34
CM2647N1	68C-36
CM2647N2	68B-34
CM2647N2	68C-36
CM2679-2	104 -55
CM2679-2	121 -22
CM2679-2	122 -23
CM2692-10-1S	33 -29
CM2692-10-1S	33 -30A

PART NUMBER	FIGURE AND INDEX NO.
CM2692-12-1H	33 -33
CM2692-12-1H	33 -37A
CM2692-12-1S	33 -37
CM2692-12-3S	68 -14
CM2692-15-1S	33 -36
CM2692-16-2S	35B- 3
CM2692-28-1S	12 -26
CM2692-32-1S	22 -22
CM2692-32-1S	23 -26
CM2692-8-1H	33 -41
CM2791	73 - 7
CM2791	73 -30
CM2791	73 -31
CM2791	73 -32
CM2791	73 -44
CM2791	73 -44
CM2791	73 -45A
CM2791	73A- 8
CM2791	73A-33
CM2791	73A-34
CM2791	73A-54
CP2 3/4	70 -17
CR163-4-10	24 -76
CR163-4-4	10 -19
CR163-4-4	10A-20
CR163-4-4	20 -37
CR163-4-4	28 -47
CR163-4-4	49 -25
CR163-4-4	50 -23
CR163-4-4	73 -54
CR163-4-4	73 -61
CR163-4-4	73A-63
CR163-4-4	73A-70
CR6	135 -28
CR763-4-4	49 -29
CR763-4-4	50 -27
CS3	134 -19
CS6	134 -62
CS6	135 -45
CS6	135 -61
CS8	134 -61
C1C2	1 - 1
C1049-8Z67	86 - 8
C156001-0102	13 -38
C156001-0104	13 -41
C156001-0106	13 -38
C1587	72 - 8
C1587-1	72 - 9A
C1587-2	72 - 9B
C161002-0201	71 - 1
C161002-0201	72A-
C161002-0202	71 - 1
C161002-0202	72A-
C161002-0203	71 - 1
C161002-0203	72A-
C161002-0204	71 - 1
C161002-0204	72A-
C161004-0105	71 - 1
C161004-0105	72A-
C161004-0106	71 - 1
C161004-0106	72B-
C161004-0107	71 - 1
C161004-0107	72B-
C161009-0101	72C-
C161009-0102	72C-
C161009-0104	72C-
C161009-0105	72C-
C161030-0102	81A-
C161030-0107	81D-
C161031-0101	81A-
C161031-0104	81D-
C161040-0103	79A-
C161040-0107	81C-
C163001-0301	42A- 1

PART NUMBER	FIGURE AND INDEX NO.
C163001-0302 #	42A- 1
C163002-0102	42B- 2
C163002-0104	42B- 2
C163030-0303	42A-15
C163030-0305 #	42A-15
C163030-0313 #	42A-15
C163032-0205	42B-18
C163032-0206	42B-18
C163032-0207	42B-18
C163032-0208	42B-18
C165001-0102	117D-15
C166001-0104	120A- 1
C166001-0104	120B-16
C166001-0601	120C-16
C166002-0101	120A- 1
C166002-0101	120B-16
C166002-0103	120A- 1B
C166002-0103	120B-17
C166002-0104	120A- 1A
C166002-0104	120B-18
C166002-0401	120C-17
C166005-0101	120A-49
C166005-0102	120A-51
C166005-0202	120C-49
C166005-0204	120B-45
C166005-0204	120C-46
C166005-0205	120B-46
C166005-0205	120C-47
C166005-0205	120C-50
C166005-0501	120A-49
C166005-0501	120B-45
C166005-0502	120A-51
C166005-0502	120B-48
C166005-0504	120B-47
C166005-0504	120C-48
C166005-0504	120A-51
C166005-0505	120B-50
C166005-0505	120C-51
C166005-0505	120A-51
C166006-0101	120A-15
C166006-0101	120B- 1
C166006-0104	120A-15
C166006-0104	120B- 1
C166006-0104	120C- 1
C166006-0108	120A-16D
C166006-0108	120B- 4
C166006-0108	120C- 4
C166006-0109	120C- 1
C166007-0102	120A- 2
C166007-0102	120B-71
C166007-0102	120C-73
C166008-0101	120B-62
C166008-0101	120C-64
C166009-0203	119 -32
C166009-0501	120B-46
C166009-0501	120B-49
C166009-0501	120A-50
C166009-0501	120A-51
C166010-0101	120A- 7
C166010-0101	120B-52
C166010-0101	120C-54
C166010-0102	120A- 8
C166010-0102	120B-54
C166010-0102	120C-56
C166010-0103	120A- 8A
C166010-0103	120B-55
C166010-0103	120C-57
C166010-0105	120A- 7
C166010-0105	120B-52
C166010-0105	120C-54
C17312-3	124A- 4
C17313	124A- 7
C17325	124A- 2
C17326	124A- 5

PART NUMBER	FIGURE AND INDEX NO.
C17330	124A- 3
C17331-3	124A- 6
C17331-6	124A- 6
C1904	72 -17
C1904	72A-28
C1904	72B-28
C1939	72 -32
C1939	72A-43
C1939	72B-43
C20057	81A- 1
C20057	81D- 1
C20073	81A- 3
C20073	81D- 3
C20075	81A-21
C20075	81D-21
C23150-017-4	35B- 4
C23150-017-4	46B-25
C2463	72 -13B
C2464	72 -13A
C253001-0101	49 -23
C253001-0101	52 - 8
C253001-0101	129 - 8
C262003-0204	42 - 1
C262003-0204	42A- 1
C262003-0204	42B- 1
C262003-0204	42C- 1
C262003-0204	43 -20
C262003-0205	43 -20
C262003-0207	42 - 1
C262003-0207	42A- 1
C262003-0207	42B- 1
C262003-0207	42C- 1
C262003-0207	43 -20
C262003-0304	42 - 1
C262003-0308	42 - 1
C262023-0102	42 - 1
C262023-0102	42A- 1
C262023-0102	42B- 2
C262023-0102	42C- 1
C262023-0102	43 -21
C262023-0103	43 -21
C262023-0104	42 - 1
C262023-0104	42A- 1
C262023-0104	42B- 2
C262023-0104	42C- 1
C262023-0104	43 -21
C2715	72 -34
C291502-0101	68B-62
C291502-0101	106 -45
C291502-0101	118A- 1
C291502-0103	68B-62
C291502-0103	68C-65
C291502-0103	106 -45
C291502-0103	118A- 1
C292501-0102	68 -13
C292501-0102	68D- 3
C292501-0102	68E- 4
C292501-0104	68E- 4
C294501-0101	95B-30
C294501-0101	95B-57
C294501-0101	117B-15
C294501-0101	117C-18
C294501-0101	117E-11
C294501-0102	117B-18
C294501-0102	117C-21
C294501-0102	117E-14
C294501-0103	117B-19
C294501-0103	117C-22
C294501-0103	117E-15
C294505-0101	113A- 8
C294505-0102	113A- 9
C2987	72A-19
C2987	72B-19
C2987-1	72A-21

PART NUMBER	FIGURE AND INDEX NO.
C2987-1	72B-21
C2987-2	72A-22
C2987-2	72B-22
C299505-0201S	68B-59
C299505-0201S	68C-62
C299505-0201S	75 -28
C299505-0301	68B-59
C299505-0301	74 - 7
C299505-0501	68B-59
C299505-0501	68C-62
C299505-0501	74 -73
C299506-0103	68B-58
C299506-0103	68C-61
C299506-0103	74 -24
C299506-0103	75 -18
C299506-0201	68B-58
C299506-0201	68C-61
C299506-0201	74 -83
C299507-0201	68B-57
C299507-0201	74 - 8
C299507-0401	68B-57
C299507-0401	68C-60
C299507-0401	74 -63
C30117	42B-15
C30274	42B-15
C3054	72A-19
C3054	72B-19
C3092	72A-23
C3092	72B-23
C3103	72A-45
C3103	72B-45
C3105	72A-45
C3411	72C-40
C3418	72C-23
C3903	72C-43
C3910/C201	72C- 1
C4129	72C-14
C421001-0101	70 -19A
C421001-0102	70 -19B
C431001-0101	116 - 1
C431001-0101	117 - 1
C431001-0101	117A- 1
C431001-0101	117D- 8
C431003-0102	117E-34
C431003-0302	117E-34
C482001-0101	95B-22
C482001-0101	116 - 5
C482001-0101	117 - 5
C482001-0101	117D- 4
C482001-0401	117E-28
C5FF10A568A	121 - 5A
C5FF10A568A	122 - 6A
C592001-0101	3 -50
C592001-0101	3A-38
C592001-0101	14 -32
C592001-0101	20 -48
C592001-0101	21 -36
C593001-0101	68B-69
C593001-0101	68C-48
C594501-0201	124A-15
C594501-0203	124A-15
C594502-0101	124A-22
C611001-0101	121 - 5A
C611001-0101	122 - 6A
C611001-0102	76A-12
C611001-0102	77B-13
C611001-0102	121 - 5A
C611001-0102	122 - 6A
C611501-0101	123B- 1
C611501-0102	76A-11
C611501-0102	77B-12
C611501-0102	121 -34
C611501-0102	122 -33
C611501-0102	123B- 1

PART NUMBER	FIGURE AND INDEX NO.
C621001-0103	124A-
C621001-0106	124A-
C622001-0102	39 - 5
C622001-0104	39 - 9
C622001-0201	3 -29
C622001-0201	3A-23
C622001-0202	3 -30
C622003-0101	3 -43
C622003-0103	2B-29
C622003-0103	2C-27
C622003-0104	3 -44
C622003-0105	2B-29
C622003-0105	2C-27
C622004-0101	3 -48
C622004-0101	121 -57
C622004-0101	122 -55
C622006-0102	3A-31
C622006-0103	3A-29
C622006-0105	3A-30
C622007-0101	3A-36
C660501-0101	70 -37
C660501-0201	70 -21
C661001-0101	67 -80
C661001-0101	68 -80
C661001-0101	68A-36
C661001-0101	116 -38
C661001-0101	117 -36
C661001-0101	117A-35
C661001-0101	117B- 3
C661001-0201	68A-36
C661001-0201	117B- 3A
C661001-0201R	68A-36
C661001-0201R	117B- 3A
C661001-0501	117C- 3
C661001-0501	68B-37
C661001-0502	117C- 3
C661001-0502	68B-37
C661001-0503	117C- 3
C661001-0503	68B-37
C661001-0504	117C- 3
C661001-0504	68B-37
C661001-0505	117C- 3
C661001-0505	68B-37
C661002-0101	67 -79
C661002-0101	68 -79
C661002-0101	68A-35
C661002-0101	116 -36
C661002-0101	117 -34
C661002-0101	117A-33
C661002-0101	117B- 1
C661002-0201	68A-35
C661002-0201	117B- 1A
C661002-0201R	68A-35
C661002-0201R	117B- 1A
C661002-0301	68B-36
C661002-0301	117C- 1
C661002-0501	68B-36
C661002-0501	117C- 1
C661002-0503	68B-36
C661002-0503	117C- 1
C661002-0504	68B-36
C661002-0504	117C- 1
C661002-0505	68B-36
C661002-0505	117C- 1
C661002-0506	68B-36
C661002-0506	117C- 1
C661003-0201	68B-35
C661003-0501	68B-35
C661003-0504	68B-35
C661003-0504	68C-37
C661010-0201	68A-64
C661010-0201	68B-28
C661010-0201	102 - 1
C661010-0202	101 - 1

PART NUMBER	FIGURE AND INDEX NO.
C661010-0207	68A-64
C661010-0207	68B-28
C661010-0207	101 - 1
C661010-0210	101 - 1
C661011-0105	67 -73
C661011-0105	68 -74
C661011-0105	68A-32
C661011-0105	68B-33
C661011-0105	101 - 2
C661011-0105	102 - 2
C661011-0106	67 -73
C661011-0106	68 -74
C661011-0106	68A-32
C661011-0106	68B-33
C661011-0106	101 - 2
C661011-0106	102 - 2
C661012-0101	68B-33
C661012-0101	68C-35
C661025-0102	68C-35
C661060-0105	68B-27
C661060-0105	102 - 1
C661060-0111	68C-29
C661060-0111	102 - 1
C661060-0202	68B-27
C661060-0210	68C-29
C661061-0202	68B-28
C661061-0202	101 - 1
C661061-0206	68B-28
C661061-0206	102 - 1
C661061-0210	68C-30
C661061-0210	101 - 1
C661061-0211	68C-30
C661061-0211	102 - 1
C661071-0101	68B-33
C661071-0101	68C-35
C661071-0101	101 - 2
C661071-0101	102 - 2
C661071-0102	68B-33
C661071-0102	68C-35
C661071-0102	101 - 2
C661071-0102	102 - 2
C661075-0101	68B-36
C661075-0101	68C-38
C661075-0101	117C- 1
C661075-0101	117E- 1
C661075-0102	68B-36
C661075-0102	68C-38
C661075-0102	117C- 1
C661075-0103	68B-36
C661075-0103	68C-38
C661075-0103	117C- 1
C661075-0103	117E- 1
C661075-0104	68B-36
C661075-0104	68C-38
C661075-0104	117C- 1
C661075-0104	117E- 1
C661075-0106	117C- 1
C661075-0106	117E- 1
C661076-0101	117C- 3
C661076-0101	117E- 3
C661076-0101	68B-37
C661076-0101	68C-39
C661076-0102	117C- 3
C661076-0102	117E- 3
C661076-0102	68B-37
C661076-0102	68C-39
C661076-0103	117C- 3
C661076-0103	117E- 3
C661076-0103	68B-37
C661076-0103	68C-39
C661076-0104	117C- 3
C661076-0104	68B-37
C661076-0104	68C-39
C661076-0105	117C- 3

PART NUMBER	FIGURE AND INDEX NO.
C661076-0105	117E- 3
C661080-0101	68B-34
C661080-0101	68C-36
C661080-0101	102 - 3
C661080-0101	101 - 3
C662001-0104	68A-39
C662001-0104	68B-40
C662001-0204	68B-40
C662035-0101	68B-40
C662035-0101	68C-42
C662037-0103	68B-40
C662037-0103	68C-42
C664501-0101	68B-50
C664501-0103	68B-50
C664501-0103	68C-46
C664508-0101	68B-39
C664508-0101	68C-41
C668020-0104	68B-42
C668020-0104	68C-43
C668020-0107	68B-42
C668020-0107	68C-43
C668501-0101	68A-48
C668501-0102	74 -61
C668501-0102	75 -44
C668501-0104	68A-48
C668501-0110	74 -61
C668501-0110	75 -44
C668501-0201	68A-48
C668501-0204	74 -61
C668501-0204	75 -44
C668501-0206	68A-48
C668501-0206	68B-49
C668501-0206	68C-45
C668501-0207	68B-49
C668501-0211	68B-49
C668501-0211	68C-45
C668507-0101	70 -20
C668540-0101	68B-38
C668540-0101	68C-40
C668540-0101	95B-28
C668540-0101	117C-17
C668540-0101	117E-23
C669502-0103	68A-42
C669502-0104	68A-42
C669502-0201	68A-42
C669502-0201	68B-43
C669502-0201	68C-48A
C669502-0202	68A-42
C669502-0202	68B-43
C669502-0202	68C-48A
C914	135 - 6
C915	135 - 5
D2341/90M2	72 - 5
D30062-2	42B- 6
D30062-6	42B- 6
D30065	42B- 3
D30119	42B-19
D30129	42B- 7
D3098	72A-49
D3098	72B-49
D3102	72A-49
D3108/90A2	72A- 5
D3108/90A8	72A- 5
D3223/90AT2	72A- 5
D3223/90AT4	72B- 5
D3223/90AT8	72A- 5
D3223/90AT8	72B- 5
D366	70 -43
D4023X.375	70 -45
ECM475127	107 -38
ECM475594	107 -31
ECM475634	107 -34
ECM476364	107 -37
ECM476474	107 -39

PART NUMBER	FIGURE AND INDEX NO.
ECM476563	107 -30
ECM479012 #	107 -35
ECM479130 #	107 -32
ECM479132 #	107 -43
ECM479135 #	107 -36
ECM479136 #	107 -33
ECM479137 #	107 -40
ECM479138 #	107 -41
ECM479139 #	107 -42
EC1239AB	1 -10
EC1675A-8	1 -14A
EC2216A-8	1 -14D
EC776	1 -12
EC880	1 - 2
E33-10K	104 -54
E33-10K	105 -64
E33-10K	121 -31
FCC20068	13 - 4
FCC20068	13 - 4
FC6446	42 -37
FC6446	42A-26
FC6446	42C-35
FDC2475-50	130 - 2
F620	94 -16
GA5-375	73 -44
GA5-375	73 -45A
GA5-375	73A-54
GB59	81 - 8
GB59	81B- 8
G37	134 -80
G37	135 -73
G440404	68A-44
G440437	68B-45
G440437	68C-50
G441304	68A-43
G441344	68B-44
G441344	68C-49
G442697	68A-46
G442697	113 - 9
G442698	68A-46
G442698	113 - 9
G442702	68A-47
G442702	68B-48
G442702	68C-53
G442785	68B-47
G442785	68C-52
G442785	113 - 9
G442786	68B-47
G442786	68C-52
G442786	113 - 9
G444619	68A-45
G444619	113 - 1
G444627	68B-46
G444627	68C-51
G444627	113 - 1
G815825	68A-42
G818827	68B-43
G818827	68C-48A
HE1251	111 - 8
HE1366-1	111 - 3
HE1367	111 - 1
HE1372-1	111 - 5
HE1373	111 - 7
HF3	74 -16
HF3	76 -39
IDI757	123A-27
IKI10-4-6	117A-25
IKI2-4	117A-31A
IKI4-4	117A-27
IKI4-8	117A-22A
IKI6-10	117A-19
IKI6-8	117A-16
IKI4-6	117A-25
IO-470-F	76 - 1

PART NUMBER	FIGURE AND INDEX NO.
IO-520D	76 - 1
JE5	74 -99B
J2005-2	123B- 6
J2049-1D	67 -60
J2049-1D	68 -59
J9534-20	123B- 4
J9534-20	123B-13
KM610-64	73 - 9
KM610-64	73A-10
K375-125	94B-15
LN1032X	121 -56
LN1032X	122 -54
LOCTITE5381	1 -14C
LOCTITE87	1 -14E
LP4-20AM	42A-27
L4858-1	68A-58
L4958-1	68B-55
L4858-1	68C-59
L4958-1	67 -31
L4858-1	68 -31
MIL-P-8585	1 -14
MDR20-2	108 -31
MS100009	79 -21
MS100009	79A-14
MS100009	81 -22
MS100009	81A-36
MS100009	81B-22
MS100009	81C-17
MS100009	81D-36
MS124663	113A-27
MS15001-1	40A-34
MS15001-1	47 -28
MS15001-1	48B-26
MS15584-2	123 - 6
MS15584-2	123 -34
MS15584-2	123 -63
MS1652-16	78 -10
MS16562-12	78A- 5
MS16562-16	77 -25
MS16562-16	78 - 5
MS16624-1025	110A-13
MS16624-43	97 -56
MS16625-1112	40A-26
MS16625-212	43 -15
MS20002-5	40 -22
MS20002-6	40 -21
MS20002C5	40 -20
MS20002C5	40 -33
MS20002C5	41 -22
MS20002C5	41 -30
MS20002C5	17 - 2
MS20002C5	18 - 5
MS20002C6	40 -19
MS20002C6	41 -19
MS20002C6	113A-30
MS20074-03-3	108 - 6
MS20074-03-3	110A- 1
MS20074-03-3	110A-27
MS20074-04-05	74 -97
MS20074-04-06	74 -96
MS20074-04-3	77 -19
MS20074-04-4	78 - 1
MS20074-04-4	78A- 1
MS20074-04-5	44 -29
MS20074-05-14	123B-11
MS20200KP4	21 -34
MS20200KP4	94 -18
MS20201KP6A	100 -45
MS20220-1	131 -12A
MS20220-2	131 -13
MS20220-2	131 -22
MS20220-2	131 -37
MS20220-2	132 -13
MS20220-2	132 -22

PART NUMBER	FIGURE AND INDEX NO.
MS20220-2	132 -37
MS20220-2 #	97 -40
MS20230A2	5 -25
MS20230A2	6 -25
MS20230A2	7 - 5
MS20230A2	7 - 9
MS20230A2	7 -10
MS20230A2	7 -12
MS20230A2	7 -15
MS20230A2	7 -20
MS20230A2	7 -21
MS20230A2	7 -22
MS20230A2	7 -23
MS20230A2	7 -25
MS20230A2	7 -27
MS20230A2	7 -28
MS20230A2	8 - 5
MS20230A2	8 - 6
MS20230A2	8 - 7
MS20230A2	8 - 8
MS20230A2	8 -16
MS20230A2	8 -20
MS20230A2	8 -25
MS20230A2	8 -26
MS20230A2	8 -28
MS20230A2	8 -31
MS20230B20	84 -30
MS20230B20	84 -39
MS20230B20	85 -18
MS20230B20	85 -26
MS20253-2-3115	358- 8
MS20253-2-695	73 -46
MS20253-2-695	73A-56
MS20253-5-100	76 - 5
MS20253-5-100	77 - 5
MS20253-5-112 #	77 - 5
MS2030A2	8 - 4
MS20364-1032C	74 -69
MS20364-1032C	74 -77
MS20364-1032C	74 -87
MS20364-1032C	74 -92
MS20364-1032C	74 -94A
MS20364-1032C	75 -20
MS20364-1032C	76 -39
MS20364-1032C	76 -74
MS20365-1032	125A- 3
MS20365-1032	129 -41
MS20365-1032C	87A-10
MS20365-1032C	87A-12
MS20365-1032C	129 -39
MS20365-428	122 -48
MS20365-624C	74 - 5
MS20365-624C	75 - 4
MS20365-720C	3 - 7
MS20365-720C	3A- 7
MS20365-720C	40 -10
MS20365-720C	40A-10
MS20365-720C	41 -10
MS20365-720C	121 -37
MS20365-720C	122 -36
MS20365-820C	3 - 3
MS20365-820C	3A- 3
MS20365-820C	16 - 5
MS20365B632C	67 -14
MS20365B632C	67 -16
MS20365B632C	67 -19
MS20365B637C	67 -25
MS20365B632C	67 -63
MS20365B632C	67 -72
MS20365B632C	67 -74
MS20365B632C	67 -79
MS20365B632C	67 -80
MS20365B632C	68 -16
MS20365B632C	68 -18

PART NUMBER	FIGURE AND INDEX NO.
MS20365B632C	68 -21
MS20365B632C	68 -26
MS20365B632C	68 -62
MS20365B632C	68 -70
MS20365B632C	68 -71
MS20365B632C	68 -72
MS20365B632C	68 -73
MS20365B632C	68 -74
MS20365B632C	68 -79
MS20365B632C	68 -80
MS20365B632C	101 - 3
MS20365B632C	102 - 3
MS20365B832C	67 -61
MS20365B832C	68 -60
MS20366F1032	25 -38
MS20392-1C13	95 -12
MS20392-1C15	59 -12
MS20392-1C15	59A-21
MS20392-1C15	60 -41
MS20392-1C15	62 -33
MS20392-1C15	63B-12
MS20392-1C15	63C-80
MS20392-1C15	63C-80
MS20392-1C21	59 - 2
MS20392-1C21	59A- 1
MS20392-1C21	60 - 1
MS20392-1C21	61 - 1
MS20392-1C21	61 -41
MS20392-1C21	61A- 1
MS20392-1C21	61A-40
MS20392-1C21	62 - 2
MS20392-1C21	63 - 1
MS20392-1C21	63C- 1
MS20392-1C23	51 -25
MS20392-1C33	45 - 2
MS20392-1C33	46 - 2
MS20392-1C33	46A- 2
MS20392-1C33	46B- 2
MS20392-1C33	51 -22
MS20392-1C33	51A- 2
MS20392-1C37	59A-31
MS20392-1C39	62 -70
MS20392-1C49	52 - 6
MS20392-1C55	126 -78
MS20392-1C57	95 -22
MS20392-1C7	51 -19
MS20392-1C7	51A-22
MS20392-1C9	61 -48
MS20392-1C9	61A-48
MS20392-1C9	63A-23
MS20392-2C11	46 -40
MS20392-2C11	63C- 4
MS20392-2C13	87A- 4
MS20392-2C13	129 -44
MS20392-2C13	87 -13
MS20392-2C15	91 -12
MS20392-2C15	91 -34
MS20392-2C15	92 - 9
MS20392-2C15	92 -31
MS20392-2C17	62 -55
MS20392-2C17	62 -62
MS20392-2C17	63 -15
MS20392-2C17	63 -39
MS20392-2C17	63A-14
MS20392-2C17	63B- 2
MS20392-2C20	62 -42
MS20392-2C21	63B- 9
MS20392-2C25	16 -12A
MS20392-2C27	63 -45
MS20392-2C31	59 - 8
MS20392-2C31	59A-16
MS20392-2C34	61 -39
MS20392-2C34	61A-38
MS20392-2C37	63C-38

PART NUMBER	FIGURE AND INDEX NO.
MS20392-2C37	63C-58
MS20392-2C37	63C-70
MS20392-2C45	51A- 7
MS20392-2C45	63C-76
MS20392-2C47	60 -38
MS20392-2C53	16 -12
MS20392-2C53	98 -75
MS20392-2C53	99A-28
MS20392-2C7	66A-31
MS20392-2C7	66B-34
MS20392-2C83	63C-76
MS20392-2C9	66B-65
MS20392-2C9	50 -12
MS20392-2C9	98 -60
MS20392-2C9	99A-18
MS20392-2C9	126A- 8
MS20392-3C17	63C-15
MS20392-3C47	131 -17
MS20392-3C47	132 -17
MS20392-3C49	63C-12
MS20392-3C55	131 -13
MS20392-3C55	131 -26
MS20392-3C55	131 -32
MS20392-3C55	132 -13
MS20392-3C55	132 -26
MS20392-3C55	132 -32
MS20392-4C13	90 -29
MS20392-5C65	63B-26
MS20426AD10-32	16 -10
MS20450C12-12	49 -13
MS2065-1032C	32A- 8
MS20822-2D	74 -52
MS20822-2D	76 -54
MS20822-2D	110 -16
MS20822-2D	134 -52
MS20822-3D	120A-13A
MS20822-4-4D	103 -43
MS20822-4-4D	104 -30
MS20822-4-4D	105 -28
MS20822-4-4D	117B-22
MS20822-4D	29 -33
MS20822-4D	113 -19
MS20822-4D	114 -20
MS20822-4D	114 -39
MS20822-6-2D	107 -15
MS20822-6-2D	107 -24
MS20822-6-6	116 -19
MS20822-6-6B	117 -39
MS20822-6-6B	117D- 7
MS20822-6-6B	136 -20
MS20822-6-6D	108 -12
MS20822-6D	103 -25
MS20822-6D	104 -22
MS20822-6D	104 -33
MS20822-6D	105 -20
MS20822-6D	105 -31
MS20822-6D	116 -27
MS20822-6D	117 -25
MS20822-6D	117B- 9
MS20822-6D	117C- 7
MS20823-2D	116 -30
MS20823-2D	117 -28
MS20823-2D	118A-17
MS20823-2D	135 -23
MS20823-4B	113 -22
MS20823-4B	114 -15
MS20823-4D	40A-15A
MS20823-4D	104 -30A
MS20823-4D	105 -28A
MS20823-4D	113 -18
MS20823-4D	113 -21
MS20823-4D	114 -19
MS20823-4D	114 -38
MS20823-4D	126 -75

PART NUMBER	FIGURE AND INDEX NO.
MS20823-6B	117 -42
MS20823-6B	136 -23
MS20823-6D	76 -69
MS20823-6D	76 -72
MS20823-6D	103 -37
MS20823-6D	107 -22
MS20823-6D	108 -11
MS20823-6D	117B-39
MS20823-6D	117C- 7
MS20823-6D	117E-24
MS20823-8D	105 -51
MS20825-4D	67 -70
MS20825-4D	68 -70
MS20825-6D	104 -43
MS20825-6D	105 -41
MS20825-6D	117C- 8A
MS20825-6D	117E- 9
MS20825-6D	120A-33
MS20825-6D	120B-11
MS20825-6D	120C-11
MS20826-3D	119 - 8
MS20826-6D	107 -17
MS20826-6D	116 -26
MS20826-6D	117 -24
MS20826-6D	117B-10
MS20826-6D	117B-13
MS20826-6D	117B-26
MS20826-6D	117C- 8
MS20826-6D	117C- 8A
MS20826-6D	117E- 9
MS20913-1	106 -33
MS20913-1D	109 - 8
MS20913-1D	117B-38
MS20913-1D	117C-11
MS20913-1D	117E- 4
MS20913-1D	118 -16
MS20913-2D	116 -35
MS20913-2D	116 -40
MS20913-2D	117 -33
MS20913-2D	117 -38
MS20913-2D	117A-32
MS20913-2D	117B-12
MS20913-2D	117C-16
MS20913-2D	117E- 8
MS21044N08	24 -14
MS21044N3	6A-26
MS21044N3	6A-35
MS21044N3	6A-36
MS21044N3	13 - 6C
MS21044N3	14 -11
MS21044N3	14 -13A
MS21044N3	15 -11
MS21044N3	15 -19
MS21044N3	20 -17
MS21044N3	22 - 9
MS21044N3	22 -17
MS21044N3	23 -18
MS21044N3	24 -22
MS21044N3	25 -15
MS21044N3	30 - 4
MS21044N3	30 - 8
MS21044N3	30 -39
MS21044N3	30 -62
MS21044N3	30 -70
MS21044N3	30 -73
MS21044N3	30 -87
MS21044N3	32 - 3
MS21044N3	32 - 8
MS21044N3	32 -29
MS21044N3	32A- 3
MS21044N3	32A-40
MS21044N3	35 - 9
MS21044N3	35A-45
MS21044N3	35B-18

PART NUMBER	FIGURE AND INDEX NO.
MS21044N3	38 - 7
MS21044N3	38 -28
MS21044N3	46 -38
MS21044N3	46A-25
MS21044N3	46A-29
MS21044N3	46A-35
MS21044N3	46B-50
MS21044N3	49 - 3
MS21044N3	50 - 3
MS21044N3	52 - 5
MS21044N3	59 -21
MS21044N3	59 -27
MS21044N3	59 -31
MS21044N3	59 -35
MS21044N3	59A-14
MS21044N3	60 -20
MS21044N3	60 -59
MS21044N3	61 -22
MS21044N3	61 -61
MS21044N3	61A-21
MS21044N3	61A-61
MS21044N3	62 -60
MS21044N3	63 -18
MS21044N3	63 -89
MS21044N3	63A-13
MS21044N3	63A-21
MS21044N3	63A-21C
MS21044N3	63C- 3
MS21044N3	63C-99D
MS21044N3	65 -21
MS21044N3	70A- 6
MS21044N3	70A-10
MS21044N3	70B- 4
MS21044N3	70B- 8
MS21044N3	70B- 8
MS21044N3	70B-12
MS21044N3	71 -10
MS21044N3	71 -19
MS21044N3	74 -12
MS21044N3	74 -20
MS21044N3	74 -26
MS21044N3	74 -32
MS21044N3	75 -14
MS21044N3	75 -17
MS21044N3	75 -33
MS21044N3	75 -42
MS21044N3	76 -33
MS21044N3	76 -38
MS21044N3	76 -42A
MS21044N3	76 -87
MS21044N3	77 -69
MS21044N3	82 - 4
MS21044N3	82 -11
MS21044N3	83 - 8
MS21044N3	83 -15
MS21044N3	87 - 7
MS21044N3	87 -10
MS21044N3	87 -25
MS21044N3	87 -31
MS21044N3	87 -36
MS21044N3	88 -24
MS21044N3	88A- 9
MS21044N3	88A-20G
MS21044N3	89 - 8E
MS21044N3	89 -14
MS21044N3	89 -14C
MS21044N3	90 -19
MS21044N3	90 -23
MS21044N3	90 -33
MS21044N3	90 -38
MS21044N3	90 -45
MS21044N3	91 -10
MS21044N3	91 -17
MS21044N3	91 -20

PART NUMBER	FIGURE AND INDEX NO.
MS21044N3	91 -26
MS21044N3	91 -37
MS21044N3	91 -40
MS21044N3	92 - 7
MS21044N3	92 -14
MS21044N3	92 -17
MS21044N3	92 -23
MS21044N3	92 -34
MS21044N3	92 -37
MS21044N3	92 -40
MS21044N3	92 -41
MS21044N3	94 - 8
MS21044N3	94 -14
MS21044N3	94 -21
MS21044N3	94A-18
MS21044N3	94A-21
MS21044N3	94A-23
MS21044N3	94A-27
MS21044N3	94A-44
MS21044N3	94B- 8
MS21044N3	95 -57
MS21044N3	95A- 9
MS21044N3	95A-20
MS21044N3	95A-23
MS21044N3	96 -49
MS21044N3	97 -23
MS21044N3	97 -28
MS21044N3	97 -33
MS21044N3	97 -38
MS21044N3	97 -44
MS21044N3	97 -51
MS21044N3	98 -46
MS21044N3	98 -64
MS21044N3	98 -71
MS21044N3	99A-15
MS21044N3	99A-24
MS21044N3	100 -29
MS21044N3	100 -35
MS21044N3	101 -34E
MS21044N3	101 -45
MS21044N3	102 -30F
MS21044N3	102 -41
MS21044N3	104 -38
MS21044N3	104 -58
MS21044N3	104 -62
MS21044N3	104 -65
MS21044N3	104 -68
MS21044N3	105 -36
MS21044N3	105 -67
MS21044N3	105 -71
MS21044N3	105 -74
MS21044N3	105 -77
MS21044N3	109 -16
MS21044N3	110 -24
MS21044N3	110A-24
MS21044N3	113 -15
MS21044N3	114 -12
MS21044N3	115 -10
MS21044N3	116 - 4
MS21044N3	117 - 4
MS21044N3	117A- 4
MS21044N3	117A-36
MS21044N3	117B- 7
MS21044N3	117B-17
MS21044N3	117C-20
MS21044N3	117D-16
MS21044N3	117E-13
MS21044N3	120 -24
MS21044N3	120A-26
MS21044N3	120A-42
MS21044N3	120B-28
MS21044N3	120B-30
MS21044N3	120B-32
MS21044N3	120B-38

PART NUMBER	FIGURE AND INDEX NO.
MS21044N3	120B-78
MS21044N3	120C-31
MS21044N3	120C-33
MS21044N3	120C-39
MS21044N3	120C-80
MS21044N3	121 -10
MS21044N3	121 -59
MS21044N3	122 -11
MS21044N3	122 -57
MS21044N3	123A-23
MS21044N3	125 - 5
MS21044N3	125B- 3
MS21044N3	126 -14
MS21044N3	126 -45
MS21044N3	126 -60
MS21044N3	126 -64
MS21044N3	126 -68
MS21044N3	126 -69
MS21044N3	126 -71
MS21044N3	126A-13
MS21044N3	126A-16
MS21044N3	126A-18
MS21044N3	127 -38
MS21044N3	127 -61
MS21044N3	128 -36
MS21044N3	128 -53
MS21044N3	129 -29
MS21044N3	131 -17
MS21044N3	131 -68
MS21044N3	132 -17
MS21044N3	132 -68
MS21044N3	133 - 9
MS21044N3	134 -57
MS21044N3	134 -81
MS21044N3	134 -88
MS21044N3	134 -92
MS21044N3	134 -96
MS21044N3	134 -99B
MS21044N3	134 -99F
MS21044N3	135 -49
MS21044N3	135 -74
MS21044N3	135 -83
MS21044N3	136 - 4
MS21044N3	136 -17
MS21209F1-20	94B- 3
MS21919DG10	77 -41
MS21919DG12	76 -55
MS21919DG12	113 -21
MS21919DG15	115 - 9
MS21919DG2	75 -10
MS21919DG2	75 -43
MS21919DG2	76 -28
MS21919DG2	106 -42
MS21919DG2	106 -47
MS21919DG2	121 -44
MS21919DG24	76 -33
MS21919DG26	101 -34A
MS21919DG26	102 -30B
MS21919DG3	46B-23
MS21919DG3	46B-29
MS21919DG3	46B-58
MS21919DG3	104 -68
MS21919DG3	105 -77
MS21919DG3	120 -17
MS21919DG4	3 -39
MS21919DG4	76 -59
MS21919DG4	101 -52
MS21919DG4	102 -48
MS21919DG4	104 -40
MS21919DG4	105 -38
MS21919DG40	77 -70
MS21919DG5	46B-23
MS21919DG5	119 -22
MS21919DG6	4 - 3

PART NUMBER	FIGURE AND INDEX NO.
MS21919DG6	5 - 5
MS21919DG6	6 - 5
MS21919DG6	74 -91A
MS21919DG7	76 -51
MS21919DG7	76 -55
MS21919DG7	121 -13
MS21919DG7	121 -50
MS21919DG7	122 -14
MS21919DG7	122 -48
MS21919DG8	76 -62
MS21919DG8	77 -41
MS21919DG8	114 -32
MS21919DG8	136 -19
MS21919DG9	77 -58
MS21919DG9	101 -42
MS21919DG9	102 -38
MS21919D2	70A- 7
MS21919D6-11	75 -42
MS21919WDG12	134 -56
MS21919WDG9	135 -49
MS24462-4	19 -28
MS24462-4	19 -29
MS24665-132	45 - 3
MS24665-132	46 - 3
MS24665-132	46 -42
MS24665-132	46A- 3
MS24665-132	46A-30
MS24665-132	46B- 3
MS24665-132	46B-35
MS24665-132	46B-66
MS24665-132	50 -13
MS24665-132	51 -20
MS24665-132	51 -23
MS24665-132	51 -26
MS24665-132	51A- 3
MS24665-132	51A- 8
MS24665-132	51A-22
MS24665-132	52 - 7
MS24665-132	59 -15
MS24665-132	59A-23
MS24665-132	59A-32
MS24665-132	60 -38
MS24665-132	60 -41
MS24665-132	61 -39
MS24665-132	61 -41
MS24665-132	61 -49
MS24665-132	61A-38
MS24665-132	61A-40
MS24665-132	61A-49
MS24665-132	62 -31
MS24665-132	62 -42
MS24665-132	62 -55
MS24665-132	62 -64
MS24665-132	62 -70
MS24665-132	63 -15
MS24665-132	63 -39
MS24665-132	63 -45
MS24665-132	63 -63
MS24665-132	63A-14
MS24665-132	63A-23
MS24665-132	63B- 3
MS24665-132	63B- 9
MS24665-132	63B-13
MS24665-132	63B-14
MS24665-132	63C- 6
MS24665-132	63C-40
MS24665-132	63C-59
MS24665-132	63C-72
MS24665-132	63C-78
MS24665-132	63C-81
MS24665-132	65 - 5
MS24665-132	87A- 5
MS24665-132	90 -27
MS24665-132	91 - 5

PART NUMBER	FIGURE AND INDEX NO.
MS24665-132	91 -13
MS24665-132	91 -31
MS24665-132	91 -35
MS24665-132	92 - 5
MS24665-132	92 -10
MS24665-132	92 -28
MS24665-132	92 -32
MS24665-132	95 -12
MS24665-132	95 -22
MS24665-132	96 -14
MS24665-132	97 -29
MS24665-132	98 -10
MS24665-132	98 -60
MS24665-132	98 -76
MS24665-132	99 -10
MS24665-132	99 -14
MS24665-132	99A-18
MS24665-132	99A-29
MS24665-132	110A-11
MS24665-132	126 -78
MS24665-132	129 -45
MS24665-132	131 -13
MS24665-132	131 -17
MS24665-132	131 -24
MS24665-132	131 -32
MS24665-132	132 -13
MS24665-132	132 -17
MS24665-132	132 -24
MS24665-132	132 -32
MS24665-132	87 -14
MS24665-134	47 -50
MS24665-134	48B-48
MS24665-134	59 - 9
MS24665-134	59 -14
MS24665-134	59A-17
MS24665-134	59A-22
MS24665-134	62 -33
MS24665-134	62 -36
MS24665-134	63 -60
MS24665-134	63C-14
MS24665-134	73 -10
MS24665-134	73 -48
MS24665-134	87 -19
MS24665-134	90 -43
MS24665-134	95 -53
MS24665-134	96 -12
MS24665-134	96 -34
MS24665-134	96 -50
MS24665-134	97 - 5
MS24665-134	97 -15
MS24665-134	97 -19
MS24665-134	97 -24
MS24665-134	97 -39
MS24665-134	97 -45
MS24665-134	98 - 7
MS24665-134	98 -14
MS24665-134	98 -17
MS24665-134	98 -42
MS24665-134	98 -58
MS24665-134	99 - 7
MS24665-134	99 -17
MS24665-134	99A- 3
MS24665-134	99A-11
MS24665-134	104 -35
MS24665-134	127 -49
MS24665-134	128 -45
MS24665-134	134 -82
MS24665-134	135 -75
MS24665-134	46A-19C
MS24665-134	46B-21
MS24665-136	97 -34
MS24665-136	98 -38
MS24665-136	99 -38
MS24665-136	131 -13

PART NUMBER	FIGURE AND INDEX NO.
MS24665-136	131 -17
MS24665-136	131 -25
MS24665-136	131 -32
MS24665-136	131 -37
MS24665-136	132 -13
MS24665-136	132 -17
MS24665-136	132 -25
MS24665-136	132 -32
MS24665-136	132 -37
MS24665-140	95 -32
MS24665-140	95 -41
MS24665-140	96 -24
MS24665-145	105 -33
MS24665-151	59 - 3
MS24665-151	59A- 1
MS24665-151	60 - 1
MS24665-151	61 - 1
MS24665-151	61A- 1
MS24665-151	62 - 2
MS24665-151	63 - 1
MS24665-151	63C- 1
MS24665-151	126A- 8
MS24665-21	95 -74
MS24665-281	90 -30
MS24665-281	109 -25
MS24665-281	110 -33
MS24665-283	47 - 4
MS24665-283	47 -24
MS24665-283	48 - 5
MS24665-283	48 -26
MS24665-283	48A- 5
MS24665-283	48A-26
MS24665-283	48B- 4
MS24665-283	48B-22
MS24665-283	63A-25
MS24665-283	63B-28
MS24665-285	59 -13
MS24665-285	59A-19
MS24665-285	62 -34
MS24665-285	91 - 3
MS24665-285	91 -29
MS24665-285	92 - 3
MS24665-285	92 -26
MS24665-287	46B-56A
MS24665-351	40 -25
MS24665-351	40A-40
MS24665-351	41 -36
MS24665-351	62 -46
MS24665-355	95 -28
MS24665-355	98 -39
MS24665-355	99 -39
MS24665-5	63 -55
MS24665-5	94A-35
MS24665-5	94A-40
MS24665-5	95 - 7
MS25171-3S	121 -12A
MS25171-3S	121 -30
MS25171-3S	121 -50
MS25171-3S	122 -31
MS25171-3S	122 -48
MS25171-3S	125 -10
MS25171-3S	125A- 8
MS25237-330	68C-66
MS25253-1	104 -54
MS25253-1	105 -64
MS25253-1	121 -31
MS28773-4	113 -41
MS28775-008	80 - 6
MS28775-008	80 -41
MS28775-009	80 - 5
MS28775-014	80 -26
MS28775-016	80 -45
MS28775-023	80 -38
MS28775-10	80 -16

PART NUMBER	FIGURE AND INDEX NO.
MS28775-110	93 - 8
MS28775-113	81A-20
MS28775-113	81D-20
MS28775-136	80 - 4
MS28777-10	113 -28
MS28777-10	115 - 6
MS28778-10	115 - 5
MS28778-3	40 -15D
MS28778-3	90 - 38
MS28778-4	43 -19
MS28778-4	90 - 38
MS28778-4	93 -12
MS28778810	113 -27
MS2877883	13 -25
MS2877884	41 -15
MS2877884	44 -40
MS29512-4	107 - 7
MS29512-6	108 -17
MS29513-10	103 -48
MS29513-10	104 -45
MS29513-10	105 -43
MS29513-10	110A-16
MS29513-10	112 -12
MS29513-111	110A- 5
MS29513-112	112 -15
MS29513-116	112 -16
MS29513-13	111 - 6
MS29513-138	110A- 6
MS29513-16	103 -53
MS29513-16	104 -50
MS29513-16	105 -48
MS29513-16	111 - 4
MS29513-18	103 -51
MS29513-18	104 -48
MS29513-18	105 -46
MS29513-7	109 -21
MS29513-7	110 -29
MS35489-11	34 - 1
MS35489-11	35 -28
MS35489-11	84 -43
MS35489-11	120 -26
MS35489-110	84 -31
MS35489-118	84 -35
MS35489-118	85 -22
MS35489-118	119 -23
MS35489-118	121 -25
MS35489-118	122 -27
MS35489-12	84 -22
MS35489-12	85 - 8A
MS35489-13	124A-19
MS35489-134	123 -58
MS35489-14	28 -33
MS35489-14	29 -15
MS35489-14	35 -16
MS35489-14	35 -28
MS35489-14	35A-13
MS35489-14	35A-46
MS35489-14 #	13 -20
MS35489-14S	107 -49
MS35489-16	24 -11
MS35489-17	70 -10
MS35489-17	107 -46
MS35489-17	108 -19
MS35489-17	121 -17
MS35489-17	122 -19
MS35489-19	121 -15
MS35489-19	122 -17
MS35489-20	85 -30
MS35489-20	107 -48
MS35489-22	37 - 78
MS35489-33	129 -31
MS35489-33S	94B-14
MS35489-4	121 -27
MS35489-4	122 -25

PART NUMBER	FIGURE AND INDEX NO.
MS35489-4	122 -26
MS35489-4	123 -12
MS35489-4	123 -42
MS35489-4	123A-19
MS35489-48	121 -16
MS35489-48	122 -18
MS35489-5	84 -43
MS35489-5	90 -16
MS35489-6	107 -47
MS35489-6	108 -20
MS35489-6S	101 -53
MS35489-6S	102 -49
MS35489-7	90 -16
MS35489-8	46B-30
MS35489-9	129 -28
MS35692-522	47 -49
MS35692-522	48B-47
MS35692-522	46A-19B
MS35692-522	46B-20
MS9021-038	76A-16
MS9021-038	77B-17
MZ0020-31AV	108 -31
M31AS832R6C	52 -16
M74C524-12E	135 -20
NAS1023A08K	126A- 3
NAS1080C6	30 -99C
NAS1080C6	30 -99D
NAS1080C6	32 -13
NAS1080C6	32A-14
NAS1303-23H	40A-36
NAS1304-14	126 -43
NAS1304-3	126 -43
NAS1329A06K120	3A-35A
NAS1329A06K120	5 -48
NAS1329A06K120	6 -48
NAS1329A06K75	14 -33
NAS1329A06K75	20 -49
NAS1329A06K75	21 -37
NAS1329A08K120	3 -31A
NAS1329A08K75	14 -33
NAS1329A08K75	16 -19
NAS1329A08K75	20 -49
NAS1329A08K75	21 -37
NAS1329A08K75	86 - 4
NAS145-16	17 - 1
NAS145-16	18 - 4
NAS145-35	40 -31
NAS145-35	41 -28
NAS145-38	40 -18
NAS145-45	41 -21
NAS146-35	41 -26
NAS146-36	40 -29
NAS146-39	40 -17
NAS146-41	40 -17
NAS146-47	41 -18
NAS178-10-6	30 -91
NAS178-8-7	30 -37
NAS178-8-7	30 -99
NAS179-10	30 -92
NAS179-8	30 -38
NAS179-8	30 -99A
NAS220-11	63C-88
NAS220-5	49 -22
NAS220-5	49 -22
NAS220-5	50 -22
NAS220-5	50 -22
NAS220-5	51 - 1
NAS220-6	70A-12
NAS220-6	70A-15
NAS220-8	120 -11
NAS220-8	131 -47
NAS220-8	132 -47
NAS221-10	70 - 3
NAS221-11	94B- 7

PART NUMBER	FIGURE AND INDEX NO.
NAS221-13	129 - 2
NAS221-5	134 -57
NAS221-5	135 -49
NAS221-6	35 - 8
NAS221-6	35A-45
NAS221-8	6A-26
NAS221-8	14 -13A
NAS221-8	71 -15
NAS221-8	71 -24
NAS221-9	94B- 3
NAS221C-6	120 -23
NAS222-5	119 -17
NAS224-15	18 - 1
NAS228-35RH	95 -11
NAS288-35	94A-33
NAS288-35LH	95 -10
NAS295M4	100 -10
NAS382-1	97 -22
NAS382-1	97 -27
NAS382-1	100 -33
NAS382-2	95 -52
NAS382-2	97 -48
NAS382-2	98 -30
NAS382-2	99 -30
NAS395-1-3	39 - 7
NAS395-1-3	123 -16
NAS395-1-3	123 -25
NAS395-1-3	123 -41
NAS395-10-3	19 -53
NAS395-12-3	29 -20
NAS395-12-3	29 -22
NAS395-12-3	68A-28
NAS395-12-3	69 -35
NAS395-12-3	86 - 8
NAS395-13-3	68A-42
NAS395-13-3	68B-43
NAS395-13-3	68C-48A
NAS395-14-3	5 -26
NAS395-14-3	6 -26
NAS395-14-3	6A-25
NAS395-14-3	11 -13
NAS395-14-3	12A-22
NAS395-14-3	15 -35
NAS395-14-3	24 -29
NAS395-14-3	25 -21
NAS395-14-3	28 -49
NAS395-14-3	29 -32
NAS395-14-3	82 - 6
NAS395-14-3	89 -17
NAS395-16-3	5 - 4
NAS395-16-3	6 - 4
NAS395-16-3	6A-48
NAS395-16-3	6A-49
NAS395-16-3	17 -42
NAS395-16-3	18 -39
NAS395-16-3	22 -11
NAS395-16-3	22 -12
NAS395-16-3	105 -59A
NAS395-16-3	105 -59A
NAS395-16-3	124A-10B
NAS395-17-3	3 -13
NAS395-17-3	39 - 2
NAS395-17-3	69A- 8
NAS395-18-1	102B-10
NAS395-18-3	3 -15B
NAS395-18-3	3A-47
NAS395-18-3	35 -52
NAS395-18-3	35A-68
NAS395-19-3	88A-31
NAS395-3-3	123 -24
NAS395-4-3	68A-41
NAS395-5	61 -53
NAS395-5	63 -75
NAS395-5-3	24 -45

PART NUMBER	FIGURE AND INDEX NO.
NAS395-5-3	25 -37
NAS395-5-3	102B- 6
NAS395-5-3	135 -37
NAS395-6-3	19 -54
NAS395-6-3	24 -85
NAS395-6-3	28 -31
NAS395-6-3	29 -13
NAS395-6-3	35 -51
NAS395-6-3	35A-67
NAS395-6-3	53 -22
NAS396-6-3	88 - 9
NAS396-6-3	88A-26
NAS397-10	13 - 6D
NAS397-10	76 -63
NAS397-12	103 -16
NAS397-12	104 -13
NAS397-12	105 -12
NAS397-12	117A-24
NAS397-14	13 -13
NAS397-14	117A-10
NAS397-14	117A-13
NAS397-14	117A-17
NAS397-14	117A-22
NAS397-14	117D-10
NAS397-14	117D-14
NAS397-14	117D-19
NAS397-14	136 - 8
NAS397-14	136 -12
NAS397-14	136 -14
NAS397-14	136 -16
NAS397-14	13 -17
NAS397-14-1	116 -10
NAS397-14-1	116 -13
NAS397-14-1	116 -17
NAS397-14-1	117 -10
NAS397-14-1	117 -13
NAS397-14-1	117 -21
NAS397-16	76 -35
NAS397-16	117A-20
NAS397-16	117A-39
NAS397-16-1	77 -44
NAS397-18	76 -23
NAS397-18	88 -12
NAS397-18	88 -15
NAS397-18	88A-29
NAS397-18	88A-33
NAS397-18-1	77 -14
NAS397-22	8A-10
NAS397-28	76 -30
NAS397-28	76 -32
NAS397-32	89 -25
NAS397-50-1	89 -10
NAS397-8	36 -17
NAS397-8	37 - 7
NAS397-8	117A-28
NAS397-8	117C-26
NAS397-8	117E-18
NAS397-8	117B-48
NAS398-42	73 -66
NAS398-42	73A-75
NAS398-42	77 -36
NAS398-42	77 -63
NAS398-50	76 -45
NAS398-50	76 -50
NAS398-50	76 -58
NAS398-50	77 -61
NAS398-50	88 -20
NAS398-50	88A- 5
NAS42DD5-17	70A-22
NAS42DD5-39	70A-22
NAS42HT4-16	97 -67
NAS42HT5-36	97 -66
NAS42HT6-8	91 -31
NAS42HT6-8	92 -28

PART NUMBER	FIGURE AND INDEX NO.
NAS428H3-10	38 -23
NAS428H3-6	30 -42
NAS43DD0-21	32A-43
NAS43DD0-21	32A-46
NAS43DD0-6	94B-13
NAS43DD1-18	67 -67
NAS43DD1-18	68 -67
NAS43DD1-20	68A-40
NAS43DD1-20	68B-42
NAS43DD1-20	68C-43
NAS43DD2-12A	74 -62
NAS43DD2-16A	74 -62
NAS43DD3-12	51A-10
NAS43DD3-12	63A-21C
NAS43DD3-14	67 -59
NAS43DD3-14	68 -58
NAS43DD3-16	75 -12
NAS43DD3-16	75 -45
NAS43DD3-16	89 - 8D
NAS43DD3-16	90 -18
NAS43DD3-23	90 -18
NAS43DD3-24	107 - 6
NAS43DD3-3	63A-21C
NAS43DD3-5	88 -38
NAS43DD3-5	88A-20
NAS43DD3-56	90 -15A
NAS43DD3-56	115 -10
NAS43DD3-8	70 -19C
NAS43DD4-19	101 -34C
NAS43DD4-19	102 -30D
NAS43DD6-33	63B-27
NAS43HT3-12	61 - 3
NAS43HT3-12	61A- 3
NAS43HT3-12	91 -35
NAS43HT3-12	92 -32
NAS43HT3-14	74 -14
NAS43HT3-16	60 -20
NAS43HT3-16	63 -18
NAS43HT3-16	124A-24
NAS43HT3-24	76 -39
NAS43HT3-256	131 -68
NAS43HT3-256	132 -68
NAS43HT3-34	49 -30A
NAS43HT3-34	50 -28A
NAS43HT3-6	65 -20
NAS43HT3-6	66 - 3
NAS43HT3-6	74 -29
NAS43HT3-88	87 -22
NAS43HT3-9	75 -32
NAS43HT3-92	131 -68
NAS43HT3-92	132 -68
NAS43HT4-10	95 -61
NAS43HT4-10	95 -61
NAS43HT4-10	95 -61
NAS43HT4-10	97 -50
NAS43HT4-11	64A-21
NAS43HT4-11	65A-11
NAS43HT4-12	46A-24
NAS43HT4-12	61A-56
NAS43HT4-12	63 -84
NAS43HT4-12	63C-98
NAS43HT4-12	95 -46
NAS43HT4-16	95 -37
NAS43HT4-18	63A- 4
NAS43HT4-20	59 -34
NAS43HT4-20	60 -54
NAS43HT4-20	61 -56
NAS43HT4-20	63 -84
NAS43HT4-20	64 -19
NAS43HT4-20	64A-17
NAS43HT4-20	95 -39
NAS43HT4-20	95 -69
NAS43HT4-24	46 -48
NAS43HT4-24	95 -68

PART NUMBER	FIGURE AND INDEX NO.
NAS43HT4-28	95 -38
NAS43HT4-40	95 -70
NAS43HT4-41	46B-44
NAS43HT4-41	46B-49
NAS43HT4-42	95 -39
NAS43HT4-47	64 -17
NAS43HT4-47	64A-15
NAS434F4	68 -17
NAS438-10	76 -45A
NAS444-14	7 - 2
NAS444-14	7 - 6
NAS444-14	7 -18
NAS444-14	11 -14
NAS444-14	12 -25
NAS444-14	25 - 2
NAS444-14-3	8 -21
NAS444-14-3	8A-23
NAS444-14-3	8A-28
NAS444-2	29 -19
NAS444-4	4 -23
NAS444-4	33 - 5
NAS444-4	131 -43
NAS444-4	131 -55
NAS444-4	132 -41
NAS444-4	132 -43
NAS444-4	132 -55
NAS444-4	133 -14
NAS444-4	133 -18
NAS444-4	133 -24
NAS444-4-3	5 -25A
NAS444-4-3	6 -25A
NAS444-4A	33 - 6
NAS444-5-3	126 -54
NAS444-8-3	107 -50
NAS446-1-3	57 -10
NAS446-1-3	57 -15
NAS446-1-3	57 -29
NAS446-1-3	57A- 6
NAS446-1-3	58 - 4
NAS446-1-3	67 -94
NAS446-1-3	68 -98
NAS446-1-3	68A-16
NAS446-1-3	68B-16
NAS446-1-3	123A- 7
NAS446-2-1	68C-18
NAS446-2-3	28 -51
NAS446-2-3	67 -90
NAS446-2-3	68 - 5
NAS446-2-3	68 -94
NAS446-2-3	69A- 5
NAS446-2-3	77A- 8
NAS446-2-3	84 - 4
NAS446-2-3	84 -14
NAS446-2-3	84 -20
NAS446-2-3	84 -26
NAS446-2-3	84 -38
NAS446-2-3	85 - 2
NAS446-2-3	85 - 8
NAS446-2-3	85 -12
NAS446-2-3	85 -25
NAS446-2-3	85 -48
NAS446-2-3	100 -12
NAS446-2-3	100A-10
NAS446-2-3	121 -24
NAS446-2-3	122 - 2
NAS446-2-3	122 -29
NAS446-2-3	123 - 5
NAS446-2-3	123 -10
NAS446-2-3	123 -33
NAS446-2-3	123 -37
NAS446-2-3	123 -53
NAS446-2-3	123 -57
NAS446-3-3	69 - 3
NAS446-3-3	69 -10

PART NUMBER	FIGURE AND INDEX NO.
NAS446-3-3	69 -20
NAS446-3-3	69 -26
NAS446-4	104 -66
NAS446-4	105 -75
NAS446-4-3	3 -31A
NAS446-4-3	4 - 5
NAS446-4-3	5 - 7
NAS446-4-3	6 - 7
NAS446-4-3	8 -23
NAS446-4-3	8A- 9
NAS446-4-3	33 -40
NAS446-4-3	34 - 5
NAS446-4-3	34 - 9
NAS446-4-3	34 -13
NAS446-4-3	34 -18
NAS446-4-3	34 -22
NAS446-4-3	34 -26
NAS446-4-3	34 -31
NAS446-4-3	34A- 4
NAS446-4-3	34A- 8
NAS446-4-3	34A-14
NAS446-4-3	34A-19
NAS446-4-3	34A-23
NAS446-4-3	74 -22
NAS446-4-3	74 -60
NAS446-4-3	74 -62
NAS446-4-3	75 -10
NAS446-4-3	75 -12
NAS446-4-3	75 -43
NAS446-4-3	75 -45
NAS446-4-3	77 -59
NAS446-4-3	83 - 5
NAS446-4-3	88 -13
NAS446-4-3	88 -27
NAS446-4-3	88A-23
NAS446-4-3	89 -14A
NAS446-4-3	106 -42
NAS446-4-3	106 -47
NAS446-4-3	107 -11
NAS446-4-3	109 -13
NAS446-4-3	110 -21
NAS446-4-3	110 -21
NAS446-4-3	114 -22
NAS446-4-3	114 -35
NAS446-4-3	119 -22
NAS446-4-3	120 -17
NAS446-4-3	121 -13
NAS446-4-3	121 -14
NAS446-4-3	121 -19
NAS446-4-3	121 -22
NAS446-4-3	121 -23
NAS446-4-3	121 -45
NAS446-4-3	121 -50
NAS446-4-3	122 -14
NAS446-4-3	122 -16
NAS446-4-3	122 -21
NAS446-4-3	122 -28
NAS446-4-3	122 -48
NAS446-4-3	135 -86
NAS446-5-3	53 - 1
NAS446-5-3	76 -18D
NAS446-5-3	77 -41
NAS446-5-3	77 -52
NAS455-163C4-8	14 -20
NAS464P4A10	70 -27
NAS464P4A6	70 -27
NAS488-1-3	125C-10
NAS488-10	77 -61B
NAS514P1032-14	49 -30A
NAS514P1032-14	50 -28A
NAS557-12A	34A-11
NAS557-12A	121 -45
NAS557-12A	122 -21
NAS557-4A	33 -39

PART NUMBER	FIGURE AND INDEX NO.
NAS557-4A	34 -14
NAS557-4A	34 -23
NAS557-4A	34A- 5
NAS557-4A	34A-15
NAS557-6A	34 -10
NAS557-6A	34 -19
NAS557-6A	34A- 1
NAS557-6A	121 -19
NAS557-6A	122 -28
NAS557-8A	34 - 6
NAS557-8A	34 -27
NAS557-8A	34A-20
NAS557-8A	121 -14
NAS557-8A	122 -16
NAS561-2-10	106 -21
NAS561-2-12	60 -44
NAS561-2-12	61 -41A
NAS561-2-12	61A-41
NAS561-2-8	100A- 2
NAS561-3-10	35B-30
NAS561-3-16	63C-82
NAS561-3-16	98 -50
NAS561-3-18	49 -16
NAS561-3-18	50 -16
NAS561-3-8	61 -45
NAS561-3-8	61A-45
NAS561-3-8	100 - 8
NAS561-3-8	100 -44
NAS561-3-8	100A- 5
NAS561-3-8	131 - 3
NAS561-3-8	132 - 3
NAS561-4-9	51 -18
NAS561-5-12	90 -20
NAS561-6-18	62 -25
NAS561-6-18	62 -27
NAS561-6-18	62 -53
NAS561C2-10	59A-30
NAS561C2-10	59A-34
NAS561C2-10	103 -45
NAS561C2-8	89 - 7
NAS561C3-10	60 -51
NAS561C3-10	61 -51
NAS561C3-10	61A-51
NAS561C3-10	62 -22
NAS561C3-10	62 -67
NAS561C3-10	63 -81
NAS561C3-12	59A-27
NAS561C3-12	62 -68
NAS561P2-10	105 -58
NAS561P2-5	76 -42B
NAS561P3-8	49 -30C
NAS561P3-8	50 -28C
NAS561P3-8	62 -38
NAS561P3-8	63 -57
NAS561P4-10	46 -29
NAS561P4-10	46A-58
NAS561P4-10	62 -44
NAS561P4-10	63 -48
NAS561P4-10	63 -53
NAS561P4-10	63C-36
NAS561P4-10	63C-68
NAS561P4-10	63C-68
NAS561P4-12	62 -50
NAS561P4-12	63 -52
NAS561P4-12	63C-24
NAS561P4-12	63C-29
NAS561P4-12	63C-34
NAS561P4-12	63C-61
NAS561P4-12	63C-66
NAS561P4-15	51A-18
NAS561P4-6	51A-21
NAS561P4-8	46 -28
NAS561P4-8	46A-59
NAS561P4-8	62 -48

PART NUMBER	FIGURE AND INDEX NO.
NAS561P4-8	63 -50
NAS561P6-12	63C-27
NAS561P6-12	78A-11
NAS561P6-18	63 -35
NAS561P6-18	63B-31
NAS561P6-18	63C-49
NAS561P6-18	63C-52
NAS561P6-18	63C-56
NAS561P6-22	63 -33
NAS561P6-22	63B- 5
NAS561P6-22	63B- 7
NAS561P6-22	63C-54
NAS561P6-28	63C-45
NAS561P8-18	63C-48
NAS5611P4-8	112 - 3
NAS603-10	62 -12
NAS603-10	101 -34D
NAS603-10	102 -30E
NAS603-16	59A-38
NAS620-10	125C- 5
NAS679AA3	107 - 6
NAS679A04	104 -54
NAS679A04	105 -64
NAS679A04	134 -84
NAS679A04	134 -98
NAS679A04	135 -77
NAS679A06	4 -43
NAS679A06	46A-48
NAS679A06	46B-55
NAS679A06	47 -43
NAS679A06	48B-41
NAS679A06	55 -20
NAS679A06	56 -19
NAS679A06	67 -43
NAS679A06	67 -76
NAS679A06	67 -78
NAS679A06	68 -42
NAS679A06	68 -76
NAS679A06	68 -78
NAS679A06	68B-50
NAS679A06	68C-46
NAS679A06	69 - 7
NAS679A06	69 -16
NAS679A06	69 -23
NAS679A06	69 -31
NAS679A06	123A-18
NAS679A06	124 -13
NAS679A06	131 - 4
NAS679A06	131 - 5
NAS679A06	132 - 4
NAS679A06	132 - 5
NAS679A06	134 -27
NAS679A08	3 -25
NAS679A08	13 -34
NAS679A08	16 -15
NAS679A08	16 -15
NAS679A08	41 -43
NAS679A08	60 - 7
NAS679A08	61 - 8
NAS679A08	61A- 8
NAS679A08	63 - 7
NAS679A08	63C-85
NAS679A08	63C-88
NAS679A08	65 - 9
NAS679A08	65 -13
NAS679A08	65 -23
NAS679A08	65 -27
NAS679A08	65 -30
NAS679A08	65A- 5
NAS679A08	65A- 6
NAS679A08	66 - 7
NAS679A08	66 -11
NAS679A08	70A-12
NAS679A08	70A-15

PART NUMBER	FIGURE AND INDEX NO.
NAS679A08	76 -62
NAS679A08	88A-35
NAS679A08	90 -15A
NAS679A08	95B- 3
NAS679A08	95B-33
NAS679A08	101 -37
NAS679A08	102 -33
NAS679A08	102A- 3
NAS679A08	102A- 6
NAS679A08	103 - 4
NAS679A08	104 -55
NAS679A08	120 -14
NAS679A08	121 -42
NAS679A08	121 -53
NAS679A08	122 -41
NAS679A08	122 -51
NAS679A08	131 -36
NAS679A08	132 -36
NAS679A08	134 -40
NAS679A08	134 -66
NAS679A08	134 -75
NAS679A08	135 -57
NAS679A08	135 -79
NAS679A4	14 - 6
NAS679A4	15 - 5
NAS679A4	19 - 4
NAS679A4	19 -43
NAS679A4	20 - 3
NAS679A4	21 - 3
NAS679A4	21 -33
NAS679A4	22 -24
NAS679A4	23 -27
NAS679A4	35 -12
NAS679A4	38 -13
NAS679A4	38 -17
NAS679A4	42 -21
NAS679A4	42A-24
NAS679A4	42C-20
NAS679A4	44 -15
NAS679A4	46 -23
NAS679A4	46 -34
NAS679A4	46 -49
NAS679A4	46A-38
NAS679A4	46A-53
NAS679A4	46B-39
NAS679A4	46B-46
NAS679A4	47 -31
NAS679A4	48A-35
NAS679A4	48B-36
NAS679A4	60 -55
NAS679A4	61 -57
NAS679A4	61A-57
NAS679A4	62 - 8
NAS679A4	62 -40
NAS679A4	63 -37
NAS679A4	63 -85
NAS679A4	63 -85
NAS679A4	63B-33
NAS679A4	63C-99
NAS679A4	64 - 8
NAS679A4	64 -17
NAS679A4	64 -20
NAS679A4	64A- 3
NAS679A4	64A-15
NAS679A4	64A-18
NAS679A4	64A-23
NAS679A4	64A-26
NAS679A4	65 -36
NAS679A4	65A-12
NAS679A4	65A-12
NAS679A4	65A-15
NAS679A4	65B- 5
NAS679A4	65B- 9
NAS679A4	65B-19

PART NUMBER	FIGURE AND INDEX NO.
NAS679A4	66 - 4
NAS679A4	66 -19
NAS679A4	70A-19
NAS679A4	70A-21
NAS679A4	74 -62
NAS679A4	75 -34A
NAS679A4	75 -38
NAS679A4	75 -40
NAS679A4	75 -45
NAS679A4	76 -78
NAS679A4	94 - 4
NAS679A4	94A- 3
NAS679A4	94A-11
NAS679A4	95 - 5
NAS679A4	95 -14
NAS679A4	95 -18
NAS679A4	95 -24
NAS679A4	95 -30
NAS679A4	95 -36
NAS679A4	95 -49
NAS679A4	96 - 3
NAS679A4	96 - 7
NAS679A4	96 -17
NAS679A4	96 -23
NAS679A4	96 -29
NAS679A4	96 -37
NAS679A4	96 -44
NAS679A4	97 -57
NAS679A4	97 -73
NAS679A4	98 -21
NAS679A4	98 -24
NAS679A4	98 -27
NAS679A4	98 -31
NAS679A4	99 -21
NAS679A4	99 -24
NAS679A4	99 -27
NAS679A4	99 -31
NAS679A4	100 -37
NAS679A4	107 - 4
NAS679A4	107 -27
NAS679A4	108 - 5
NAS679A4	108 -29
NAS679A4	110 - 6
NAS679A4	110A-21
NAS679A4	113 -39
NAS679A4	114 -26
NAS679A4	115 -16
NAS679A4	119 - 2
NAS679A4	120 - 2
NAS679A4	120A- 2
NAS679A4	120B-72
NAS679A4	120C-74
NAS679A4	121 -50
NAS679A4	126 - 9
NAS679A4	126 -43
NAS679A4	126A-10
NAS679A4	127 - 5
NAS679A4	127 -45
NAS679A4	128 - 6
NAS679A4	128 -12
NAS679A4	128 -42
NAS679A4	131 -32
NAS679A4	131 -38
NAS679A4	132 -32
NAS679A4	132 -38
NAS679A5	9 -14
NAS679A5	10 -15
NAS679A5	10A-16
NAS679A5	30 -57
NAS679A5	30 -94
NAS679A5	30 -96
NAS679A5	30 -99B
NAS679A5	40 -23
NAS679A5	40 -32

PART NUMBER	FIGURE AND INDEX NO.
NAS679A5	41 -23
NAS679A5	41 -29
NAS679A5	42A- 6
NAS679A5	45 -14
NAS679A5	45 -18
NAS679A5	46 -14
NAS679A5	46 -18
NAS679A5	46A-14
NAS679A5	46A-19
NAS679A5	46A-19
NAS679A5	46B-14
NAS679A5	46B-19
NAS679A5	70 -13
NAS679A5	95A-13
NAS679A5	97 -44
NAS679A5	123B- 7
NAS679A5	127 -42
NAS679A5	128 -40
NAS679A5	131 -13
NAS679A5	131 -14
NAS679A5	131 -19
NAS679A5	131 -19A
NAS679A5	131 -24
NAS679A5	131 -29
NAS679A5	131 -33
NAS679A5	131 -37
NAS679A5	132 -13
NAS679A5	132 -14
NAS679A5	132 -19
NAS679A5	132 -24
NAS679A5	132 -29
NAS679A5	132 -33
NAS679A5	132 -37
NAS679A5	17 - 4
NAS679A6	17 - 7
NAS679A6	18 - 3
NAS679A6	18 - 9
NAS679A6	30 -95
NAS679A6	30 -97
NAS679A6	30 -98
NAS679A6	40 -23A
NAS679A6	40 -30
NAS679A6	41 -20
NAS679A6	41 -27
NAS679A6	42 -34
NAS679A6	42C-33
NAS679A6	44 - 6
NAS679A6	76 -11
NAS679A6	98 -44
NAS679A6	99A- 5
NAS679C5M	40A-20A
NAS679C6M	40A-20B
NAS680A06	129 -32
NAS680A06	131 -51
NAS680A06	132 -51
NAS680A06K	123 -28
NAS680A08	7 -24
NAS680A08	8 -14
NAS680A08	24 - 4
NAS680A08	24 -63
NAS680A08	25 -38
NAS680A08	33 -44
NAS680A08	35 -43
NAS680A08	35A-62
NAS680A08	35B-23
NAS680A08	52 -18
NAS680A08	120 -14
NAS680A08	124A-12
NAS680A08	131 -46
NAS680A08	132 -46
NAS680A3	15 -27
NAS680A3	19 -65
NAS680A3	23 -25
NAS680A3	24 - 6

PART NUMBER	FIGURE AND INDEX NO.
NAS680A3	24 -53
NAS680A3	25 -16
NAS680A3	30 -16
NAS680A3	30 -27
NAS680A3	30 -33
NAS680A3	32 - 9
NAS680A3	32 -22
NAS680A3	32 -33
NAS680A3	32A- 9
NAS680A3	32A-11
NAS680A3	32A-32
NAS680A3	32A-48
NAS680A3	35A-41
NAS680A3	35A-51
NAS680A3	35B-23
NAS680A3	38 -23
NAS680A3	70 -19F
NAS680A3	71 -13
NAS680A3	71 -22
NAS680A3	84 -16
NAS680A3	84 -46
NAS680A3	84 -49
NAS680A3	85 - 4
NAS680A3	85 -33
NAS680A3	85 -36
NAS680A3	95 -66
NAS680A3	96 -40
NAS680A3	131 -49
NAS680A3	131 -61
NAS680A3	132 -49
NAS680A3	132 -61
NAS680A3	133 - 3
NAS680A3	133 -26
NAS680A3K	33 -25
NAS680A3K	33 -45
NAS680A4	24 -14
NAS680A4	32 -32
NAS680A4	32A-19
NAS680A4	32A-47
NAS680A4	33 -26
NAS680A4	36 - 3
NAS680A4	70 - 7
NAS680A4	126 -43
NAS680A4	127 -20
NAS680A4	128 -18
NAS680A4K	33 -24
NAS680A4K	33 -24
NAS680A4K	37 - 2
NAS680A5	17 -11
NAS680A5	18 -15
NAS682A3	51A-14
NAS682A3	105 -29
NAS682A4	30 -46
NAS682A4	30 -47
NAS682A4	59 -17
NAS686A08	6A-22
NAS686A08K	5 -25A
NAS686A08K	6 -25A
NAS686A3	21 -16
NAS686A3	30 -10
NAS686A4	22 -10
NAS686A4	22 -11
NAS686A4	24 -36
NAS686A4	32 -38
NAS686A4	32A-33
NAS687A3	32 -18
NAS687A3	103 -46
NAS687A3	104 -31
NAS687A4	24 -54A
NAS696A08	8A-40
NAS696A08K	5 -25
NAS696A08K	6 -25
NAS696A08K	126A- 5
NAS696A3	35B-26

PART NUMBER	FIGURE AND INDEX NO.
NAS696A3	70 -19G
NAS696A3K	120 -19
NAS696A4	24 -45
NAS696A4	32A-18
NAS696A4	35A-47
NAS696A4	59A- 8
NAS696A4	64A-29
NAS696A4	65 -37
NAS696A4	65A-18
NAS696A4	126 -43
NAS697-A3	129 -42
NAS697A04L	33 -34A
NAS697A06	24 -81
NAS697A06L	33 -34
NAS697A06L	33 -34A
NAS697A06L	120B-68
NAS697A06L	120C-70
NAS697A08	6A- 9
NAS697A08	17 -18
NAS697A08	27 - 6B
NAS697A08	28 -55
NAS697A08	51 - 3
NAS697A08	73A-53
NAS697A08	120B-68
NAS697A08	120C-70
NAS697A08K	51A-29
NAS697A08K	68A- 7B
NAS697A08K	68B- 8
NAS697A08K	68C-11
NAS697A08K	126A- 4
NAS697A3	24 -45
NAS697A3	25 -37
NAS697A3	33 -42
NAS697A3	71 -21
NAS697A3	74 -29
NAS697A3	87A-13
NAS697A3	126 -24
NAS697A3	129 - 4
NAS697A3K	33 -26A
NAS697A4	24 -45
NAS697A4	25 -37
NAS697A4	65 -37
NAS697A4	65A-18
NAS697A4	126 -23
NAS697A4K	33 -26A
NAS697A5	18 - 6
NAS698A08	28 -55
NAS698A3	51A-14
NAS698A3	126 -15
NAS698A4	35A-64
NAS69808	95A-10
NAS70A128-313	51 -27
NAS70CL328-563	78 -22
NAS70CL328-563	78A- 6
NAS743-12	102 -30C
NAS76A4-024	46B-38
O-470-R	77 - 1
OR95-1.5	124A-20
PA2	67 -50
PA2	68 -49
P855	114 -27
PDM50	121 - 2
PDM50	122 - 3
PRO890	1 -148
PSM10N	68 -91
PSM10N	124 -11
PSM15N	113 -10
PSM15N	114 - 7
P2274	117B-20
P2274	117C-23
P2274	117E-16
R3104T6-3	32 -13
R3104T6-3	32A-14
R3104T6-5	30 -99C

PART NUMBER	FIGURE AND INDEX NO.
R3104T6-5	30 -99D
R561	42 -38
R561	42A-29
R561	42C-35
R5673	81 -24
R5673	81B-24
SCEETS12-56-4	74 -99
SEL85	95A-21
SE709	113A-36
SH15C #	77B-23
SH20A #	77B-23
SH200A-C #	77B-23
SL300A-C	76 -64
SL300A-C	76A-17
SS58310	65A- 2
S1K5	20 -18
S10K140	129 - 4
S10K230	129 - 4
S1003-43A	91 -23
S1003-43A	92 -20
S1003-9A	112 -19
S1004-43A	94A-30
S1021A4-6	57 -14A
S1021A4-6	57A- 9
S1021A4-6	61A-20
S1021A4-6	63C- 9
S1021A4-6	63C-19
S1021A4-6	63C-21
S1021A6-10	68C-66
S1021A6-8	3 -51
S1021A6-8	3A-39
S1021A8-6	92 -43
S1021A8-8	3 -51
S1021Z10-10	53 - 1
S1021Z10-10	76 -51
S1021Z10-10	76 -55
S1021Z10-10	76 -61
S1021Z10-10	77 -15
S1021Z10-10	77 -45
S1021Z10-10	77 -45
S1021Z10-10	77 -59
S1021Z10-10	107 -45
S1021Z10-10	108 -18
S1021Z10-10	117 -16
S1021Z10-10	136 -19
S1021Z10-12	77 -64
S1021Z10-16	54 - 2
S1021Z10-6	46B-24
S1021Z10-6	55 -15
S1021Z10-6	118 -14
S1021Z10-8	22 -12
S1021Z10-8	70A-22
S1021Z10-8	76 -18C
S1021Z10-8	76 -45A
S1021Z10-8	77 -41
S1021Z10-8	77 -51
S1021Z10-8	77 -61B
S1021Z10-8	77 -70
S1021Z10-8	117 -18
S1021Z10-8	136 -18
S1021Z4-4	49 -18
S1021Z4-4	50 -18
S1021Z4-4	57 -23
S1021Z4-4	57 -32
S1021Z4-4	57A-13
S1021Z4-4	57A-22
S1021Z4-4	58 -18
S1021Z4-4	58 -23
S1021Z4-4	58 -26
S1021Z4-4	100 - 4
S1021Z4-4	123 -15
S1021Z4-4	123A-13
S1021Z4-5	127 - 2
S1021Z4-6	32 -35

PART NUMBER	FIGURE AND INDEX NO.
S1021Z4-6	53 - 7
S1021Z4-6	57 - 7
S1021Z4-6	57 -22
S1021Z4-6	57A- 4
S1021Z4-6	58 - 3
S1021Z4-6	58 - 8A
S1021Z4-6	58 -17
S1021Z4-6	62 -18
S1021Z4-6	67 -93
S1021Z4-6	68 -97
S1021Z4-6	70 -33
S1021Z4-6	120 -15
S1021Z4-6	120B-67
S1021Z4-6	120C-69
S1021Z4-6	123 -40
S1021Z4-6	123A- 5
S1021Z4-6	126 -45A
S1021Z4-6B	67 -10
S1021Z4-6B	68 -12
S1021Z4-8	39 - 6
S1021Z4-8	57 -10
S1021Z4-8	57 -15
S1021Z4-8	57 -29
S1021Z4-8	57A- 6
S1021Z4-8	58 - 4
S1021Z4-8	123 - 1
S1021Z4-8	123 -23
S1021Z6-10	68B-67
S1021Z6-12	68A-40
S1021Z6-12	68A-41
S1021Z6-4	28 -32
S1021Z6-4	29 -14
S1021Z6-4	60 -19
S1021Z6-4	61 -21
S1021Z6-4	63 -21
S1021Z6-4	63 -24
S1021Z6-4	63A-17
S1021Z6-4	63A-19
S1021Z6-4	64 - 6
S1021Z6-6	19 -57
S1021Z6-6	19 -60
S1021Z6-6	57 -28
S1021Z6-6	57A-16
S1021Z6-6	63A-28
S1021Z6-6	67 -89
S1021Z6-6	68 -93
S1021Z6-6	69 - 2
S1021Z6-6	69 - 9
S1021Z6-6	69 -19
S1021Z6-6	69 -25
S1021Z6-6	69A- 2
S1021Z6-6	77A- 7
S1021Z6-6	84 - 3
S1021Z6-6	84 -14
S1021Z6-6	84 -19
S1021Z6-6	84 -23
S1021Z6-6	84 -25
S1021Z6-6	84 -37
S1021Z6-6	85 - 2
S1021Z6-6	85 - 7
S1021Z6-6	85 -11
S1021Z6-6	85 -24
S1021Z6-6	85 -47
S1021Z6-6	89 -31
S1021Z6-6	100 -11
S1021Z6-6	100A- 9
S1021Z6-6	102B- 5
S1021Z6-6	106 - 6
S1021Z6-6	119 -28
S1021Z6-6	120A-27
S1021Z6-6	120A-29
S1021Z6-6	120A-49
S1021Z6-6	120B-22
S1021Z6-6	120B-33

PART NUMBER	FIGURE AND INDEX NO.
S1021Z6-6	120B-45
S1021Z6-6	120C-25
S1021Z6-6	120C-34
S1021Z6-6	120C-46
S1021Z6-6	122 - 2
S1021Z6-6	123 - 4
S1021Z6-6	123 - 9
S1021Z6-6	123 -20
S1021Z6-6	123 -22
S1021Z6-6	123 -32
S1021Z6-6	123 -36
S1021Z6-8	18 -42
S1021Z6-8	19 -48
S1021Z6-8	28 -51
S1021Z6-8	46B-28
S1021Z6-8	53 -22
S1021Z6-8	55 - 7
S1021Z6-8	55 -21
S1021Z6-8	56 -20
S1021Z6-8	59 -23
S1021Z6-8	59A-36
S1021Z6-8	60 -36
S1021Z6-8	61 -53
S1021Z6-8	63 -75
S1021Z6-8	63C-74
S1021Z6-8	68 - 5
S1021Z6-8	69A- 4
S1021Z6-8	95A- 5
S1021Z6-8	100 - 2
S1021Z6-8	104 -55
S1021Z6-8	106 -18A
S1021Z6-8	121 -20
S1021Z6-8	121 -24
S1021Z6-8	122 -29
S1021Z6-8	123 -52
S1021Z6-8	123 -56
S1021Z6-8	124 -15
S1021Z6-8	125C- 3
S1021Z6-8	134 -34
S1021Z6-8	134 -71
S1021Z6-8	135 -48
S1021Z6-8	135 -51
S1021Z6-8	135 -63
S1021Z6-8C	88 - 4
S1021Z8-10	55 - 3
S1021Z8-10	55 -16
S1021Z8-10	56 -13
S1021Z8-10	88A-31
S1021Z8-10	88A-48
S1021Z8-10	98 -77
S1021Z8-10	99A-30
S1021Z8-10	103 - 9
S1021Z8-10	103 -21
S1021Z8-10	103 -27
S1021Z8-10	104 - 7
S1021Z8-10	104 -18
S1021Z8-10	104 -24
S1021Z8-10	105 - 7
S1021Z8-10	105 -16
S1021Z8-10	105 -22
S1021Z8-10	107 -11
S1021Z8-10	114 -34
S1021Z8-10	120A-30
S1021Z8-10	120B-22
S1021Z8-10	120C-25
S1021Z8-12	75 -12
S1021Z8-14	55 -13
S1021Z8-14	56 -10
S1021Z8-14	74 -62
S1021Z8-14	75 -45
S1021Z8-20	68A-42
S1021Z8-20	68B-43
S1021Z8-20	68C-48A
S1021Z8-4	127 - 9

PART NUMBER	FIGURE AND INDEX NO.
S1021Z8-4	127 -14
S1021Z8-5	117A-30
S1021Z8-6	3 -13
S1021Z8-6	3 -18
S1021Z8-6	3 -31
S1021Z8-6	3 -41
S1021Z8-6	3A-49
S1021Z8-6	22 -21
S1021Z8-6	34 - 4
S1021Z8-6	34 -17
S1021Z8-6	34 -25
S1021Z8-6	46B-27
S1021Z8-6	46B-29
S1021Z8-6	46B-60
S1021Z8-6	55 -14
S1021Z8-6	55 -16
S1021Z8-6	56 -10
S1021Z8-6	56 -14
S1021Z8-6	67 -15
S1021Z8-6	68 -17
S1021Z8-6	68A-27
S1021Z8-6	68A-40
S1021Z8-6	68B-42
S1021Z8-6	68C-43
S1021Z8-6	69 -34
S1021Z8-6	69A- 7
S1021Z8-6	74 -23
S1021Z8-6	75 -10
S1021Z8-6	75 -42
S1021Z8-6	75 -43
S1021Z8-6	86 - 8
S1021Z8-6	88 -28
S1021Z8-6	88A-10
S1021Z8-6	100 -57
S1021Z8-6	105 -59A
S1021Z8-6	105 -59A
S1021Z8-6	106 -42
S1021Z8-6	106 -47
S1021Z8-6	109 -12
S1021Z8-6	114 -22
S1021Z8-6	119 -21
S1021Z8-6	120A-23
S1021Z8-6	120B-29
S1021Z8-6	122 -20
S1021Z8-6	122 -28
S1021Z8-6	131 -40
S1021Z8-6B	57 - 9
S1021Z8-6C	60 -13
S1021Z8-6C	61 -15
S1021Z8-6C	61A-15
S1021Z8-6C	63 -13
S1021Z8-6C	63A-11
S1021Z8-8	3 -12
S1021Z8-8	3 -15B
S1021Z8-8	3 -31A
S1021Z8-8	3 -40
S1021Z8-8	3 -52
S1021Z8-8	3A-16
S1021Z8-8	3A-19
S1021Z8-8	3A-20
S1021Z8-8	3A-47
S1021Z8-8	4 - 4
S1021Z8-8	4 -45
S1021Z8-8	5 - 4
S1021Z8-8	5 - 6
S1021Z8-8	5 -45
S1021Z8-8	6 - 4
S1021Z8-8	6 - 6
S1021Z8-8	6 -45
S1021Z8-8	6A-48
S1021Z8-8	6A-49
S1021Z8-8	8 -23
S1021Z8-8	8A- 9
S1021Z8-8	15 -37

PART NUMBER	FIGURE AND INDEX NO.
S1021Z8-8	17 -42
S1021Z8-8	18 -39
S1021Z8-8	18 -41
S1021Z8-8	19 -52
S1021Z8-8	23 -24
S1021Z8-8	24 -64
S1021Z8-8	33 -40
S1021Z8-8	34 - 8
S1021Z8-8	34 -12
S1021Z8-8	34 -21
S1021Z8-8	34 -30
S1021Z8-8	34A- 3
S1021Z8-8	34A- 7
S1021Z8-8	34A-13
S1021Z8-8	34A-18
S1021Z8-8	34A-22
S1021Z8-8	35A-11
S1021Z8-8	39 - 3
S1021Z8-8	40 - 2
S1021Z8-8	40A- 2
S1021Z8-8	41 - 2
S1021Z8-8	54 - 2
S1021Z8-8	55 -10
S1021Z8-8	56 - 7
S1021Z8-8	56 -10
S1021Z8-8	68 -27
S1021Z8-8	68A-48
S1021Z8-8	68B-49
S1021Z8-8	68C-45
S1021Z8-8	70 -19
S1021Z8-8	74 -36
S1021Z8-8	74 -59
S1021Z8-8	75 -27
S1021Z8-8	82 - 6
S1021Z8-8	83 - 4
S1021Z8-8	88 -13
S1021Z8-8	88 -26
S1021Z8-8	88A-22
S1021Z8-8	89 -14A
S1021Z8-8	89 -16
S1021Z8-8	89 -21
S1021Z8-8	89 -23
S1021Z8-8	89 -30
S1021Z8-8	102B- 9
S1021Z8-8	104 -66
S1021Z8-8	104 -67
S1021Z8-8	105 -75
S1021Z8-8	105 -76
S1021Z8-8	106 - 7
S1021Z8-8	106 -15
S1021Z8-8	110 -20
S1021Z8-8	116 -33
S1021Z8-8	117 -31
S1021Z8-8	119 -22
S1021Z8-8	120 -17
S1021Z8-8	121 -13
S1021Z8-8	121 -14
S1021Z8-8	121 -18
S1021Z8-8	121 -19
S1021Z8-8	121 -21
S1021Z8-8	121 -22
S1021Z8-8	121 -23
S1021Z8-8	121 -45
S1021Z8-8	121 -50
S1021Z8-8	122 -14
S1021Z8-8	122 -16
S1021Z8-8	122 -21
S1021Z8-8	122 -22
S1021Z8-8	122 -48
S1021Z8-8	123 -62
S1021Z8-8	124A-10A
S1021Z8-8	126 -56
S1021Z8-8	131 -40
S1021Z8-8	131 -43

PART NUMBER	FIGURE AND INDEX NO.
S1021Z8-8	131 -56
S1021Z8-8	132 -40
S1021Z8-8	132 -43
S1021Z8-8	132 -56
S1021Z8-8	133 -15
S1021Z8-8	133 -17
S1021Z8-8	133 -23
S1021Z8-8	134 -73
S1021Z8-8	135 -85
S1021Z8-8	13 -19
S1021Z8-8	13 -19
S1021Z8-8C	65B- 6
S1021Z8-8C	105 -61
S1021Z8-8C	126 -76
S1022A4-6B	53 - 4
S1022Z4-12B	67 -67
S1022Z4-12B	68 -67
S1022Z4-6B	68A-16
S1022Z4-6B	68B-16
S1022Z6-10	62 -19
S1022Z6-10	63 -58
S1022Z6-8	135 -37
S1022Z6-8B	68C-18
S1022Z8-6	3 -11A
S1022Z8-6	3 -18
S1022Z8-6	3A-49
S1022Z8-8	3 -11A
S1022Z8-8	3 -12A
S1022Z8-8	3 -15
S1022Z8-8	3 -15A
S1022Z8-8	3 -28
S1022Z8-8	3 -49
S1022Z8-8	3A-13
S1022Z8-8	3A-14
S1022Z8-8	3A-17
S1022Z8-8	3A-22
S1022Z8-8	3A-42
S1022Z8-8	3A-46
S1022Z8-8	88 - 8
S1022Z8-8	88A-25
S1022Z8-8	135 -66
S1023A4-6	56 - 1
S1023A4-6	57 - 6
S1023A4-8B	68B-22
S1023A6-6C	88A-40
S1023A6-8C	70 -36
S1026BG	1 -18
S1026BG	89 -30
S1042-1-275	129 - 5
S1047-1	1 -20
S1047-1	35B-19
S1047-2	1 -20
S1048-2	12 -22
S1050-1	1 -48
S1050-1-3.15	127 -63
S1050-2	1 -48
S1050-3	1 -48
S1053E10T	1 -19
S1053E10T	88A-46
S1053E12T	1 -19
S1053E12T	76 -29
S1053E12T	76 -31
S1053E16T	89 -24
S1053E16T	89 -24
S1053E20T	1 -19
S1053E20T	73 -65
S1053E20T	73A-74
S1053E24T	1 -19
S1053E24T	76 -44
S1053E24T	88 -19
S1053E24T	88A- 4
S1053E28T	1 -19
S1053E32T	1 -19
S1053E7T	1 -19

PART NUMBER	FIGURE AND INDEX NO.
S1053E8T	1 -19
S1053E8T	88 -14
S1053E8T	88 -14A
S1053E8T	88A-28
S1053E8T	88A-32
S1053E8T	88A-45
S1053K10T	1 -19
S1053K12T	1 -19
S1053K20T	1 -19
S1053K20T	77 -35
S1053K20T	77 -35
S1053K20T	77 -62
S1053K24T	1 -19
S1053K24T	76 -49
S1053K24T	76 -57
S1053K24T	77 -60
S1053K24T	89 - 9
S1053K24W	1 -19
S1053K28W	1 -19
S1053K32T	1 -19
S1055-1	1 -21
S1055-1-2.25	123 -59
S1055-1-62	129 -12
S1060-1	64 -16
S1060-14	64 -16
S1060-15	59 -32
S1060-15	60 -52
S1060-15	63 -82
S1060-3	59 -32
S1066-1	68B-67
S1066-1	68C-66
S1066C1	56 - 1
S1071-1	1 -22
S1071-1	4 -43
S1071-1	5 - 3
S1071-1	6 - 3
S1071-1	6A-47
S1071-1	101 - 5
S1071-1	101 - 7
S1071-1	101 - 9
S1071-1	101 -10
S1071-1	101 -13
S1071-1	101 -14
S1071-1	101 -18
S1071-1	101 -20
S1071-1	101 -20
S1071-1	101 -47
S1071-1	101 -51
S1071-1	102 - 5
S1071-1	102 - 7
S1071-1	102 - 8
S1071-1	102 -10
S1071-1	102 -11
S1071-1	102 -15
S1071-1	102 -17
S1071-1	102 -17
S1071-1	102 -43
S1071-1	102A-11
S1071-1	102A-15
S1071-1	102A-17
S1071-1	102A-19
S1071-1-6	102A- 8
S1071-3	1 -22
S1071-4	1 -22
S1071-4	36 -17
S1071-4	37 - 6
S1071-4	102B- 2
S1071-5	1 -22
S1071G3	95A- 4
S1071G3	95A- 8
S1071G3	95B-10
S1071G3	95B-38
S1071R3	95A- 3
S1071R3	95A- 7

PART NUMBER	FIGURE AND INDEX NO.
S1071R3	95B- 9
S1071R3	95B-37
S1072-1	134 -72
S1072-1	135 -65
S1074-1	59A- 5
S1074-1	62 - 7
S1074-1	64A-28
S1074-1	65 -38
S1074-1	65A-17
S1078-1	1 - 7
S1078-2	1 - 8
S1078-3	1 - 9
S1078-3	31 - 3A
S1082-1	49 -27
S1082-1	50 -25
S1082-1	129 - 8A
S1082-1-18	129 -16
S1082-1-26	129 -17
S1082-1-62	129 -12
S1084-1	1 -23
S1084-1	52 -19
S1090-2	121 -54
S1090-2	122 -52
S1090-22	121 -28
S1090-22	122 -30
S1090-5	121 -54
S1091-1	121 -28
S1091-1	122 -30
S1091-5	122 -52
S1093-1	15 -39
S1095-2	33 -40
S1095-2	34 -16
S1095-2	34 -24
S1095-2	34A- 6
S1095-2	34A-17
S1095-3	34 -11
S1095-3	34 -20
S1095-3	34A- 2
S1095-3	121 -19
S1095-3	122 -28
S1095-4	34 - 7
S1095-4	34 -29
S1095-4	34A-21
S1095-4	121 -14
S1095-4	122 -16
S1095-6	34A-12
S1095-6	121 -45
S1095-6	122 -21
S1102-1	67 -12
S1102-1	68 -14
S1104-3	74 -25
S1104-3	74 -70
S1104-3	74 -78
S1104-3	74 -88
S1104-3	75 -19
S1104-3	76 -42B
S1104-3	76 -91
S1106-3	15 -12
S1106-4	75 -34
S1110ET	1 -24
S1110ET	89 -29
S1110ET	89 -30
S1115-10	125A-12
S1115-11	35A-19
S1115-14	35A-18
S1115-15	35A-19A
S1115-19	35A-23
S1115-19	35A-24
S1115-19	35A-25
S1115-19	125A-10
S1115-9	35A-18
S1115-9	35A-19
S1115-9	35A-19A
S1115-9	125A-12

PART NUMBER	FIGURE AND INDEX NO.
S1116	1 -43
S1116-1	49 -21
S1116-1	50 -21
S1117-24	40 -24
S1117-24	40A-39
S1117-24	41 -35
S1130-1	4 -43
S1130-1	5 - 3
S1130-1	6 - 3
S1130-1	6A-47
S1130-1	101 - 5
S1130-1	101 - 7
S1130-1	101 - 9
S1130-1	101 -13
S1130-1	101 -16
S1130-1	101 -18
S1130-1	101 -20
S1130-1	101 -26
S1130-1	101 -49
S1130-1	102 - 5
S1130-1	102 - 7
S1130-1	102 -10
S1130-1	102 -13
S1130-1	102 -15
S1130-1	102 -17
S1130-1	102 -23
S1130-1	102 -45
S1130-1	102A-10
S1130-1	102A-12
S1130-1	102A-16
S1130-1	102A-18
S1130-1	102A-20
S1131-1	4 -43
S1131-1	5 - 3
S1131-1	6 - 3
S1131-1	6A-47
S1131-1	101 - 5
S1131-1	101 - 7
S1131-1	101 - 9
S1131-1	101 -11
S1131-1	101 -13
S1131-1	101 -15
S1131-1	101 -18
S1131-1	101 -20
S1131-1	101 -48
S1131-1	102 - 5
S1131-1	102 - 7
S1131-1	102 - 8
S1131-1	102 -10
S1131-1	102 -12
S1131-1	102 -15
S1131-1	102 -17
S1131-1	102 -44
S1131-1	102A-10
S1131-1	102A-13
S1131-1	102A-16
S1131-1	102A-18
S1131-1	102A-20
S1132-1	5 - 3
S1132-1	6 - 3
S1132-1	101 -20
S1132-1	102 -17
S1133-1	101 -18
S1133-1	101 -46
S1133-1	102 -15
S1133-1	102 -42
S1133-2	101 -26
S1133-2	102 -23
S1135-1	101 -13
S1139-1	102 -10
S1137-1	101 -50
S1137-1	102 -46
S1137-1	102A-14
S1138-1	101 - 5

PART NUMBER	FIGURE AND INDEX NO.
S1138-1	101 - 7
S1138-1	102 - 5
S1138-1	102 - 7
S1138-1	101 - 9
S1139-1	101 -13
S1139-1	102 -10
S1141-1	28 -41
S1146-1	62 -65
S1150-30	125A-12
S1153-1	3 -38
S1153-1	46B-29
S1153-1	104 -67
S1153-1	105 -76
S1154-1	46B-26
S1155-2	106 -47
S1155-2	129 -33
S1155-3	5 - 5
S1155-3	6 - 5
S1155-3	94B-18
S1155-4	121 -23
S1155-4	122 -24
S1167-10-0404	115 - 7
S1167-10-0404	115 - 8
S1167-3-0080	90 - 2
S1167-3-0085	90 - 2
S1167-3-0100	90 - 1
S1167-4-0080	90 - 2
S1167-4-0100	40A-15
S1167-4-0100	41 -44
S1167-4-0100	90 - 1
S1167-4-0120	40 -15
S1167-4-0300	114 -31
S1167-4-0388	77 -56
S1167-4-0388	113 - 3
S1167-4-0388	114 - 3
S1167-6-0270	76 -46
S1167-6-0270	104 -53
S1167-6-0270	105 -63
S1167-6-0270	108 -30
S1167-8-0120	106 -46
S1167-8-0120	110 -15
S1168-2-15	117 -26
S1168-2-22	134 -50
S1168-2-22	135 -21
S1168-2-25	116 -28
S1168-2-26 3/4	74 -39
S1168-2-8 1/2	74 -39
S1168-4-11	114 -13
S1168-6-10 1/2	116 -18
S1168-6-12	116 -21
S1168-6-12	117 -22
S1168-6-6 1/2	117 -40
S1168-6-6 1/2	136 -21
S1188-1	73 - 9
S1188-1	73 -47
S1189-1	52 -10
S1189-2	52 -10
S1194-1-17	52 -20
S1213-1	92 -42
S1220-4	68 -32
S1220-4	68A-52
S1220-4	74 - 8
S1220-9	68B-57
S1220-9	74 - 8
S1222-1	67 -29
S1222-1	75 -28
S1222-13	68A-54
S1222-13	75 -28
S1222-16	68B-59
S1222-16	75 -28
S1223-4	67 -30
S1223-4	75 -18
S1223-5	68 -30
S1223-5	68A-53

PART NUMBER	FIGURE AND INDEX NO.
S1223-5	74 -24
S1223-5	75 -18
S1223-8	68B-58
S1223-8	74 -24
S1223-8	75 -18
S1230-11	68B-60
S1230-11	68C-63
S1230-11	75 -11
S1230-2	67 -26
S1230-2	68 -27
S1230-2	74 -17
S1230-2	75 -11
S1230-6	68A-55
S1230-6	68A-56
S1230-6	74 -17
S1230-6	75 -11
S1232-10	68D- 5
S1232-10	68D- 7
S1232-15	68D-12
S1232-20	68D- 8
S1234-1	67 -32
S1234-1	68A-52
S1234-1	75 -39
S1234-6	68B-57
S1234-6	68C-60
S1234-6	75 -39
S1236-3-0294	74 -48
S1236-3-0294	76 -54
S1236-4-0144	76 -47
S1236-4-0144	104 -52
S1236-4-0144	105 -62
S1236-4-0194	113 -20
S1236-4-0415	76 -51
S1236-4-0440	76 -51
S1236-4-0440	113 - 3
S1236-6-0130	76 -65
S1236C4-0134	76 -47
S1236C4-0290	113 -20
S1239-13	67 -40
S1239-13	68 -39
S1239-13	109 - 9
S1239-13	126 -78
S1239-24	68A-60
S1239-24	110 -17
S1239-24	126 -78
S1239-25	68A-59
S1239-25	88 -21
S1239-25	88A- 6
S1239-31	68B-53
S1239-31	89 -11
S1239-37	68B-53A
S1239-37	88A- 6
S1239-4	67 -40
S1239-4	68 -39
S1239-4	68A-60
S1239-4	109 - 9
S1239-4	110 -17
S1239-46	68B-53A
S1239-46	68C-57
S1239-46	88A- 6
S1239-48	68B-53
S1239-48	68C-56
S1239-48	89 -11
S1239-6	67 -41
S1239-6	68 -40
S1240-5	67 -27
S1240-5	68A-61
S1240-5	106 -45
S1240-5	118A- 2
S1240-6	67 -31
S1240-6	68 -31
S1240-6	68A-58
S1241-17	68B-56
S1241-17	104 -36

PART NUMBER	FIGURE AND INDEX NO.
S1241-17	105 -34
S1241-3	68A-57
S1241-3	89 -11
S1241-38	68B-56
S1241-38	104 -36
S1241-38	105 -34
S1241-40	104 -59
S1241-40	105 -68
S1241-7	67 -42
S1241-7	68 -41
S1241-7	89 -11
S1241-8	104 -36
S1241-8	105 -34
S1241-9	68A-51
S1241-9	104 -36
S1241-9	105 -34
S1243-4	65 -32
S1243-5	65 -31
S1243-6	66 -20
S1245-1	87 - 1
S1245-2	87 - 2
S1245-3	87 - 1
S1249-1	46B-40
S1249-1	68A-50
S1249-1	68B-52
S1249-1	68C-55
S1249-1	87 -26
S1249-1	120A-43
S1249-1	120B-39
S1249-1	120C-40
S1255-3	67 -11
S1255-3	68 -13
S1255-6	68 -13
S1258-1	101 -32
S1258-1	102 -29
S1260-1	102 -28
S1273-1	57 -35
S1273-1	57A-21
S1273-1	58 -28
S1284-1	67 -95
S1284-1	68 -99
S1286-1	2A-10
S1286-1	106 -30
S1286-2	2A-10A
S1286-2	106 -30
S1286-3	2A-10
S1286-3	2C-18
S1286-3	106 -30
S1286-4	2A-10A
S1286-4	2C-19
S1286-4	106 -30
S1291-8	6A-44
S1291-8	8A- 6
S1291-8	8A-41
S1294-1	68 -29
S1294-1	68A-54
S1294-1	74 - 7
S1294-2	68B-59
S1294-2	74 - 7
S1301-1	68A-39
S1301-1	68B-40
S1301-2	68A-39
S1301N1	67 -16
S1301N2	68 -18
S1302N1	67 -71
S1302N1	68 -71
S1302N1	68A-33
S1304N1	68 -70
S1304N2	67 -70
S1304N2	68 -70
S1304N2	68A-34
S1304N2	68B-34
S1304N2	102 - 3
S1304N2	101 - 3

PART NUMBER	FIGURE AND INDEX NO.
S1305-11	68A-40
S1305-11	68B-42
S1305-8	68A-40
S1305-8	68B-42
S1305-9	68A-40
S1305N3	67 -13
S1305N8	67 -13
S1305N9	68 -15
S1307N2	67 -19
S1309N1	67 -80
S1309N1	68 -80
S1309N1	116 -38
S1309N1	117 -36
S1309N1	117A-35
S1310N1	68 -21
S1311-1	68A-42
S1311-1	68B-41
S1311-3	68B-41
S1311-3	68C-44
S1311N1	67 -24
S1313N1	67 -73
S1313N1	68 -74
S1313N1	68A-32
S1313N1	101 - 2
S1313N1	102 - 2
S1314N1	67 -73
S1314N1	68 -74
S1314N1	68A-32
S1314N1	101 - 2
S1314N1	102 - 2
S1316N1	67 -79
S1316N1	68 -79
S1316N1	116 -36
S1316N1	117 -34
S1316N1	117A-33
S1317N1	67 -74
S1317N1	68 -73
S1317N1	68A-38
S1317N2	68B-39
S1320-1	67 -43
S1320-1	68 -42
S1321N2	68 -72
S1321N2	101 - 1
S1324N2	67 -72
S1324N2	128 -51
S1324N3	67 -72
S1324N3	102 - 1
S1324N6	67 -72
S1324N6	102 - 1
S1325N1	119 - 9
S1326N1	67 -80
S1326N1	68 -80
S1327N1	67 -79
S1327N1	68 -79
S1346-1	1 -25
S1356	1 -44
S1359-8	52 -11
S1360-10	67 -46
S1360-10	67 -47
S1360-10	67 -48
S1360-10	67 -49
S1360-10	68 -46
S1360-10	68 -47
S1360-10	68 -48
S1360-10	68D- 5
S1360-10	68D- 7
S1360-10L	68E-10
S1360-10L	68E-12
S1360-10L	68E-13
S1360-15	68 -45
S1360-15	68D-12
S1360-15L	68E- 9
S1360-15L	68E-13
S1360-20	67 -45

PART NUMBER	FIGURE AND INDEX NO.
S1360-20	68 -44
S1360-20	68D- 8
S1360-20L	68E-11
S1360-5L	68E-13
S1360-5L	68E-14
S1360-50	67 -44
S1360-50	68 -43
S1360-50	68D- 6
S1362-12	57A-11
S1362-22	57 -17
S1362-5	57 -17
S1362-5	57 -36
S1362-5	58 -10
S1362-6	57 -17
S1362-6	57 -36
S1365-1	67 -81
S1365-1	68 -81
S1366-1	1 -26
S1366-2	1 -26
S1366-3	1 -26
S1367-1	121 -48
S1372-1	68A-47
S1372-1	68B-48
S1372-1	68C-53
S1372-1	76 -24
S1372-1	77 -17
S1378-1	1 -27
S1378-2	1 -27
S1378-2	49 -35
S1378-2	50 -33
S1384N1	67 -73
S1384N1	68 -74
S1384N1	68B-33
S1384N1	68C-35
S1385N1	67 -70
S1385N1	68 -70
S1387N2	67 -72
S1387N2	68B-27
S1387N2	68C-29
S1387N3	67 -72
S1387N3	68B-27
S1387N3	68C-29
S1388N2	68 -72
S1388N2	68B-27
S1388N2	68C-29
S1389-1	1 -28
S1389-2	1 -28
S1389-2	31 - 3
S1389-3	1 -28
S1389-4	1 -28
S1389-5	1 -28
S1389-5	31 - 3A
S1389-6	1 -28
S1389-6	31 - 2
S1389-7	1 -28
S1390-5	123 -46
S1392N1	67 -70
S1392N1	68 -70
S1392N1	68A-34
S1392N1	102 - 3
S1392N1	101 - 3
S1392N2	68B-34
S1393-1	68A-41
S1393N1	68 -89
S1397-1	2 -28
S1397-1	2A-17
S1397-1	73 -48
S1397-4	2 -28
S1397-4	2A-17
S1397-4	2B-20
S1397-4	2C-20
S1398-1	1 -29
S1398-1	120C-29
S1398-2	1 -30

PART NUMBER	FIGURE AND INDEX NO.
S1398-2	120C-30
S1398-2-218.00	46B-31
S1399-1	120A-52
S1399-1	120B-15
S1399-1	120C-15
S1413N1	68A-33
S1413N1	68B-35
S1413N2	68B-35
S1413N2	68C-37
S1414N1	67 -25
S1414N1	68 -26
S1414N1	68A-37
S1414N1	68B-38
S1414N1	95B-28
S1414N1	116 - 6
S1414N1	117 - 6
S1414N1	117A- 6
S1414N1	117B-24
S1414N1	117C-17
S1414N1	134 -54
S1414N1	135 -19
S1415-1	1 -31
S1416-1	68D- 2
S1426-1	50 - 7
S1426-1	50 - 9
S1430-1	53 -19
S1432N1	67 -73
S1432N1	68 -74
S1432N1	68A-32
S1432N1	101 - 2
S1432N1	102 - 2
S1433-1	124 - 8
S1433-2	72 -38
S1438-2	92 -28
S1438-2	120A-41
S1438-2	120B-37
S1438-2	120C-38
S1438-2	121 -56
S1438-2	122 -54
S1441-1	1 -32
S1441-1	35B- 7
S1441-2	1 -32
S1441-2-5.56	88 -35
S1441-2-5.56	88A-17
S1441-3	1 -32
S1443-3	12 -21
S1450-3-10-032	13 - 6C
S1450-3-10-032	74 -15A
S1450-3-10-032	74 -27A
S1450-3-10-032	74 -67
S1450-3-10-032	74 -75
S1450-3-10-032	74 -85
S1450-3-10-032	75 -21A
S1450-3-10-032	76 -39
S1450-3-10-032	76 -42
S1450-3-10-32	76 -89
S1450-5A24-040	88A-20E
S1450-5H14-040	123B-12
S1450-5H14-063	123B- 3
S1450-6-14-080	121 -41
S1450-6-14-080	122 -40
S1450-6-14-080	123B-10
S147	125 -16
S147	125B- 8
S1470N2	67 -72
S1470N3	67 -72
S1470N3	102 - 1
S1470N6	67 -72
S1470N6	68A-31
S1470N6	68B-27
S1470N6	102 - 1
S1471N2	68 -72
S1471N2	68A-31
S1471N2	101 - 1

PART NUMBER	FIGURE AND INDEX NO.
S1471N9	68A-31
S1471N9	68B-27
S1471N9	101 - 1
S1472N1	117A-35
S1473N1	117A-35
S1476N1	117A-33
S1483-1	50 -28B
S1483-2	49 -30B
S1485D12U	76 -55
S1485D12U	77 -15
S1485D12U	77 -59
S1485D12U	136 -18
S1485D14L	77 -45
S1485D14L	77 -64
S1485D14U	77 -70
S1485D16L	76 -61
S1485D16U	76 -55
S1485D16U	77 -64
S1485D17U	88A-47
S1485D20L	76 -61
S1485D20L	77 -45
S1485D4L	126 -76
S1485D4U	68 -17
S1485D4U	68 -27
S1485D4U	68A-40
S1485D4U	68B-42
S1485D4U	68C-43
S1485D4U	70 -18
S1485D4U	89 -14A
S1485D5U	119 -21
S1485D5U	120A-22
S1485D5U	120B-29
S1485D6U	103 - 9
S1485D6U	104 - 7
S1485D6U	105 - 7
S1485D6U	106 - 5
S1485D8U	70 -18
S1485D9U	46B-59
S1486DG12U	136 -19
S1486DG2U	68A-48
S1486DG2U	68B-49
S1486DG2U	68C-45
S1486DG3U	74 -58
S1486DG5L	74 -35
S1486DG5U	75 -27
S1486DG5U	120A-30
S1486DG5U	120B-22
S1486DG5U	120C-25
S1486DG5U	121 -21
S1486DG6L	116 -34
S1486DG6L	117 -32
S1486DG7U	121 -18
S1486DG7U	122 -20
S1486DG8L	114 -33
S1486DG8L	117A-31
S1486DG8U	122 -22
S1486DG8U	13 -18
S1486DG8U	13 -18
S1487-4	76 -51
S1489-2	120A-20
S1489-2	120B-26
S1494-16	117E-32
S1494-6	95A- 6
S1494-6	95B- 8
S1494-6	95B-36
S1494-6	117E-27
S1494-7	95B-18
S1494-8	102B- 3
S1494-9	95B-47
S1495-10	1 -33
S1495-10	94A-42A
S1495-10	117A-18
S1495-10	117A-38
S1495-10	117E-31

PART NUMBER	FIGURE AND INDEX NO.
S1495-3	40 -12A
S1495-3	40A-12A
S1495-4	1 -33
S1495-4	95B-16
S1495-4	95B-17
S1495-4	114 -13
S1495-4	117A-26
S1495-4	117B-23
S1495-4	117B-25
S1495-4	117B-30
S1495-4	117B-31
S1495-4	117B-34
S1495-4	117B-35
S1495-4	117B-41
S1495-4	117B-42
S1495-4	117C-12
S1495-4	117C-14
S1495-4	117E-19
S1495-4	117E-22
S1495-6	1 -33
S1495-6	46B-50
S1495-6	76 -63
S1495-6	95B-48
S1495-6	95B-49
S1495-6	95B-55
S1495-6	95B-56
S1495-6	104 -12
S1495-6	105 -11
S1495-6	117A-23
S1495-6	117B-14
S1495-6	117B-21
S1495-6	117B-27
S1495-6	117B-28
S1495-6	117B-32
S1495-6	117B-33
S1495-6	117B-36
S1495-6	117B-37
S1495-6	117B-40
S1495-6	117B-44
S1495-6	117B-45
S1495-6	117B-46
S1495-6	117C- 5
S1495-6	117C- 5A
S1495-6	117C- 5A
S1495-6	117C- 6
S1495-6	117C- 9
S1495-6	117D- 6
S1495-6	117D-22
S1495-6	117E- 7
S1495-6	117E-10
S1495-6	117E-25
S1495-6	117E-26
S1495-6	116 -18
S1495-6	116 -21
S1495-6	117 -22
S1495-6	117 -40
S1495-8	1 -33
S1495-8	13 - 6D
S1495-8	13 -15
S1495-8	117A- 8
S1495-8	117A-12
S1495-8	117A-15
S1495-8	117A-21
S1495-8	117D- 9
S1495-8	117D-13
S1495-8	117D-18
S1496-6A	117D- 5
S1497-4	95B-26
S1497-4	114 -13
S1497-4	117B-51
S1497-4	117C-25
S1497-4	117E-20
S1497-6	95B-50
S1497-6	116 -18

PART NUMBER	FIGURE AND INDEX NO.
S1497-6	116 -21
S1497-6	117 -22
S1497-6	117 -40
S1497-6	117B-50
S1497-6	117C-24
S1497-6	117D-23
S1497-6	117E- 6
S1500	2 -51
S1500	2A-31
S1500	2B-51
S1500	2C-41
S1501-1	123A- 9
S1505-3	123B-16
S1517-2	74 -62
S1517-2	75 -45
S1517-4	74 -62
S1517-4	75 -45
S1517-4	126 -78
S1520-1	120A-19
S1520-1	120B-66
S1520-1	120C-68
S1526-1	120A-19
S1529-1	120A- 9
S1529-1	120B-56
S1529-1	120C-58
S1551-1	63B-17
S1554-1	63B-22
S1572-1	87 - 1
S1573-3	110A- 3
S1579-1	121 - 9
S1579-1	122 -10
S1579-2	121 - 9
S1579-2	122 -10
S1588-1	13 -31
S1590-4A	76 -56
S1590-4A	117D-21
S1592-1A	120A-27
S1592-1A	120A-29
S1592-1A	120B-22
S1592-1A	120B-33
S1592-1A	120C-25
S1592-1A	120C-34
S1592-1A	124 -15
S1592-1B	46B-28
S1592-2A	95A- 5
S1592-2A	104 -55
S1592-2A	106 -18A
S1592-2A	134 -69
S1592-2A	135 -62
S1592-3A	135 -50
S1592-3B	121 -20
S1592-4A	135 -48
S1596-60	68D- 6
S1596-60L	68E- 8
S1597-1-30.8	76A-13
S1597-1-30.8	77B-14
S1597-1-30.8	121 -46
S1597-1-30.8	122 -43
S1597-1-30.8	123B-14
S1597-1-31.2	76A-13
S1597-1-31.2	77B-14
S1597-1-31.2	121 -46
S1597-1-31.2	122 -43
S1600	2 -51
S1600	2A-31
S1600	2B-51
S1600	2C-41
S1605-3	67 -15
S1605-3	68 -17
S1605-3	68A-40
S1605-3	68B-42
S1605-3	68C-43
S1611-1	1 -34
S1613-3-75	92 -40

PART NUMBER	FIGURE AND INDEX NO.
S1613-3-75	95A- 4A
S1614	1 -45
S1616-6LL-	117B-43
S1616-6LL-	117B-47
S1616-6LL-10.00	117B-11
S1616-6LL-3.62	117B- 8
S1618B3	60 -52
S1618B3	63 -82
S1618D1	64 -16
S1618D3	60 -52
S1618D3	63 -82
S1620B2	65 -32
S1620B5	65 -31
S1620C2	65 -32
S1620D5	65 -31
S1620D5	65A- 8
S1635-1	1 -35
S1635-2	1 -35
S1635-3	1 -35
S1636-1	1 -36
S1636-2	1 -36
S1636-3	1 -36
S1637-1	1 -37
S1637-1	122 -46
S1637-2	1 -38
S1637-2	121 -48
S1637-2	122 -46
S1638-1	1 -39
S1638-1	121 -49
S1638-1	122 -47
S1638-1	124A- 8
S1638-1	124A-14
S1638-2	1 -40
S1638-2	121 -49
S1638-2	122 -47
S1638-2	124A-13
S1638-2	124A-18
S1638-2	124A-18
S1638-2	124A-25
S1640-12	1 -41
S1640-15	1 -41
S1640-6	1 -41
S1640-9	1 -41
S1640-9	121 -49
S1640-9	121 -49
S1640-9	122 -47
S1641-12	1 -42
S1641-15	1 -42
S1641-6	1 -42
S1641-9	1 -42
S1641-9	122 -47
S1644-3	76 -27
S1646-1	8B - 3
S1656-6	2A- 1
S1660-1	121 -50
S1660-1	121 -58
S1660-1	122 -48
S1660-1	122 -56
S1668-1	68A-62
S1668-1	68B-63
S1668-1	68C-67
S1673-1	121 -30
S1673-1	122 -31
S1674-1	92 -15
S1675-1	92 -16
S1693-2	68B-69
S1693-2	68C-48A
S1693-2	88A-50
S1693-2	121 -50
S1693-2	122 -48
S1710-1	90 -44
S1710-1	95A-16
S1711-1	113 -44
S1713-1	2B-26

PART NUMBER	FIGURE AND INDEX NO.
S1713-1	2C-26
S1714-1	2B-25
S1714-1	2C-25
S1721-12	120B-61
S1721-12	120C-63
S1721-16	120C-63
S1722-15	120C-54
S1723-5	120C-53
S1724-1	120B-60
S1724-1	120C-62
S1728-1	88A-36
S1746D1	64 -16
S1746D2	61 -54
S1746D36	65 -32
S1746D8	65A- 8
S1746W1	64A-14
S1746W2	61A-54
S1746W2	63C-96
S1746W27	65A- 8
S1746W35	64A-19
S1746W36	65 -32
S1746W5	65B-14
S1752-1	68B-62
S1752-1	106 -45
S1752-1	118A- 2
S1752-2	68B-55
S1760-1	68B-61
S1760-1	68C-64
S1760-1	68D- 9
S1760-1	68D-10
S1760-1	89 -28
S1760-1	95B-21
S1760-1	95B-43
S1760-1	101 -31
S1760-1	102 -28
S1760-3	68D- 2
S1760-7	89 -28
S1762-2	57 -10
S1762-2	57 -15
S1762-2	57 -29
S1762-2	57A- 5
S1776-1	28 -41
S1776-3	28 -41
S1780-8	88A-20A
S1791-1	68B-61
S1791-1	68C-64
S1791-1	95B-20
S1791-1	95B-42
S1793-1	95B- 7
S1793-1	95B-40
S1793-2	95B-46
S1794-1	95A- 6
S1794-1	95B- 6
S1794-1	95B-35
S1794-1	95B-53
S18-30	94 - 5
S18-30	94A- 6
S1800-1	95B- 1A
S1800-1	95B- 4
S1800-1	95B- 5
S1800-1	95B-11
S1800-1	95B-12
S1800-1	95B-13
S1800-1	95B-14
S1800-1	95B-15
S1800-1	95B-19
S1800-1	95B-31A
S1800-1	95B-34
S1800-1	95B-39
S1800-1	95B-41
S1800-1	95B-44
S1800-1	95B-45
S1800-1	95B-51
S1800-1	95B-52

PART NUMBER	FIGURE AND INDEX NO.
S1800-1	95B-54
S1801-1	95B-25
S1802-2	95B-24
S1807-1	121 -10B
S1807-1	121 -30
S1807-1	121 -50
S1807-1	122 -11B
S1807-1	122 -31
S1807-1	122 -48
S1807-2	121 -30
S1808-2	122 -31
S1809-1	130 - 2
S1810-550	40A-15
S1810-800	40 -15
S1819-3	14 -12
S1822-1	94A-49A
S1831-1	123 - 8
S1831-1	123 -31
S1834-1	88A-20B
S1853-1	129 - 8A
S1853-1	129 -13
S1853-1	129 -21
S1853-3	73 -34
S1853-3	73A-38
S1853-4	73 -64
S1853-4	73A-73
S1853-4	77 -33
S1853-4	78 -13
S1853-4	78A-13
S1853-4	129 - 8
S1853-4	129 -24
S1860-2	12A-24
S1860-2A	8 -32
S1860-2A	8A- 7
S1860-2A	12A-17
S1860-2A	12A-19
S1860-2A	12A-20
S1860-2A	12A-23
S1860-2A	12A-25
S1860-2A	24 - 4
S1860-2A	35 -41
S1860-2A	35A- 9
S1862-2	33 -35
S1862-2A	33 -43
S1863-3	5 -45
S1863-3	8A- 4
S1863-3	30 -10
S1863-3	33 -31
S1863-3	35B-24
S1863-3	131 -41
S1863-3	131 -41
S1863-3A	19 -35
S1874-1C	69A-10
S1876-1	67 -43
S1876-1	68 -42
S1876-1	123 -17
S1876-1	123 -38
S1876-1	123A-24
S1891-10	13 -11
S1891-10	13 -21
S1891-10	104 -14
S1891-10	106 - 1
S1891-48	74 -95
S1891-48	74 -98
S1894-3	68A-47
S1894-3	68B-48
S1894-3	68C-53
S1895-1	69A- 3
S1898-2	57A-12
S1899-6G	68C-66
S1908-7	3A-21
S1913-1	104 -54
S1913-1	105 -64
S1914-8	60 - 9

PART NUMBER	FIGURE AND INDEX NO.
S1914-8	60 -35
S1914-8	61 -10
S1914-8	61 -37
S1914-8	61A-10
S1914-8	61A-36
S1914-8	63 - 9
S1914-8	63 -73
S1914-8	63A- 7
S1914-8	63B-20
S1914-8	63C-93
S1918-1	102 -28
S1930-1	104 -55
S1931-1	121 -31
S1931-8	52 -16
S1939-1	70 - 7A
S1948-2-1	1 -51
S1948-2-10	1 -51
S1948-2-11	1 -51
S1948-2-12	1 -51
S1948-2-13	1 -51
S1948-2-14	1 -51
S1948-2-15	1 -51
S1948-2-16	1 -51
S1948-2-17	1 -51
S1948-2-18	1 -51
S1948-2-19	1 -51
S1948-2-2	1 -51
S1948-2-20	1 -51
S1948-2-3	1 -51
S1948-2-4	1 -51
S1948-2-5	1 -51
S1948-2-6	1 -51
S1948-2-7	1 -51
S1948-2-8	1 -51
S1948-2-9	1 -51
S1950-4	57A-19
S1957-2	60 -46
S1957-2	61 -53
S1957-2	61A-53
S1957-2	63 -75
S1957-2	63A-29
S1957-2	63C-11
S1958-1	46B-56
S1959-1	94A-49A
S1959-2	94A-49A
S1964-3	77 -72
S1974-1	68B-62
S1974-1	68C-65
S1974-1	106 -45
S1974-1	118A- 2
S1981-1	68E- 6
S1981-1	68E- 6A
S1981-1	68E- 7
S1981-1	101 -31
S1981-5	102A- 7
S1982-1	68B-55
S1982-1	68C-59
S1985-1	94A-50A
S1985-1	94B-10
S1988-1	116 -22
S1988-1	117 -43
S1988-1	117D- 3
S1988-1	136 -24
S1991-1	121 -30
S1991-1	122 -31
S1994-1-1	68E- 2
S2013-2	63C-34A
S2013-2	63C-66A
S2014-2	63C-34A
S2014-2	63C-66A
S202RB	1 -16
S202RB	3 -19
S202RB	3A-50
S202RB	17 -39

PART NUMBER	FIGURE AND INDEX NO.
S202RB	18 -40
S202RB	19 -63
S202RB	19 -64
S202RB	35 -18
S202RB	58 -16
S202RB	77A- 6
S202RB	77A- 6
S202RB	77A- 6
S202RB	77A-11
S202RB	77A-13
S202RB	84 - 6
S202RB	84 -11
S202RB	85 -50
S202RB	129 -26
S202VW	1 -16
S202VW	35A-40
S2020-1	104 -51B
S2020-1	105 -49B
S2024-1	88 -33
S2024-1	88A-15
S2029-1	70 - 1
S2055-1-1	68E-17
S2070W103	63C-96
S2070W103	61A-54
S2070W103	63 -82
S2070W112	65A- 8
S2070W112	64A-19
S2070W118	65 -32
S2070W201	70 -25
S2070W204	70 -26
S2070W207	70 -25
S2071-1	102A- 9
S2074-1	70 -28
S2076-1	70 -31
S2077-5	68A-25
S2077-5	69 -36
S2081-1	70 -34
S2081-2	70 -35
S2092-3	1 -49
S2092-4	1 -50
S2093-1	94B-22
S2106-1	13A- 1
S2107-1	13A- 2
S2108-1	49 -35B
S2108-2	50 -33B
S2116-1	102A- 4
S2122-1	68E-14
S2122-2	68E-14
S2135-1	68B-68
S2135-1	68C-47
S2160-1	68E-16
S2160-1	101 -31
S2160-3	68E-15
S2160-3	113 -10
S2163-1	68C- 7
S2163-3	68C- 8
S2180-1	40A-48
S2195-2	49 -35A
S2195-2	50 -33A
S2209-2	121 -108
S2209-2	121 -30
S2209-2	122 -118
S2209-2	122 -31
S225-1	3A-18
S225-1	3A-19
S225-1	22 -20
S225-1	22 -21
S225-1	23 -21
S225-1	23 -23
S225-1	27 - 7
S225-1	126 -72
S225-1	127 -25
S225-1	128 -23
S225-1	131 -58

PART NUMBER	FIGURE AND INDEX NO.
S225-1	132 -58
S225-2	3A-12
S225-2	3A-13
S225-3	15 -36
S225-4	35A-10
S225-4F	3 -11
S225-4F	3 -11A
S225-4F	3 -12A
S225-4F	3 -11
S225-5	3 -12
S225-6	134 -73
S225-6	135 -66
S226-2	7 - 2
S226-2	8A-23
S226-2	8A-28
S226-2	11 -14
S226-2	11 -14A
S226-2	12A-23
S226-3	24 -28
S226-3	25 -21
S226-3	28 -49
S226-3	29 -31
S226-5	35 -40
S226-5	35A- 9
S226-5F	8 -10A
S226-5F	8 -11A
S226-5F	8 -32
S226-5F	12 - 7A
S226-5F	12 - 7B
S226-5F	12 -23
S226-5F	12 -24
S226-5F	12 -25
S237	11 -12
S237-1	127 -24
S237-1	128 -22
S237-2	12A-21
S237-2	12A-22
S237-4	15 -34
S272-17	113A-21
S272-207	112 - 7
S272-211	112 -11
S272-220	112 -14
S29001032	88A-20D
S2900832	3 -15A
S2900832	3A-43
S2900832	3A-46
S2900832	67 -82
S2900832	68 -82
S292-1	1 -17
S292-11	1 -17
S292-12	1 -17
S292-12	13 - 9
S292-14	1 -17
S292-14	125A- 8
S292-16	1 -17
S292-18	126A-14
S292-2	1 -17
S292-28	1 -17
S292-3	1 -17
S292-4	1 -17
S292-5	1 -17
S292-6	1 -17
S292-8	1 -17
S338-7	128 - 1
S339-2	128 - 1
S347-1	28 -41
S347-1	29 -33
S349	25 -23
S349	35 -42
S349	38 -33
S349	127 -23
S349	128 -21
S350	31 - 7
S350	119 -21

PART NUMBER	FIGURE AND INDEX NO.
S351	74 - 9
S351	75 -30
S352	34 - 2
S354-1	34 - 3
S354-2	108 - 9
S354-3	108 -10
S354-3	110 - 3
S354-5	34A- 9
S354-5	34A-16
S355	67 -56
S355	68 -55
S355-1	107 -28
S378-1	126A-15
S378-1L	90 -36
S378-1L	100 -25
S378-1L	100 -31
S378-1L	131 -17
S378-1L	132 -17
S378-2	96 -46
S378-2	97 -20
S378-2	97 -25
S378-2	97 -30
S378-2	97 -40
S378-3	131 -32
S378-3	131 -38
S378-3	132 -32
S378-3	132 -38
S378-3L	35 -10
S378-3L	95 -48
S378-3L	96 -15
S378-3L	96 -19
S378-3L	98 -22
S378-3L	99 -22
S378-4	94A-10
S378-4	95 -13
S378-4	95 -17
S378-4	95 -23
S378-4	95 -29
S378-4	95 -33
S378-4	95 -35
S378-4	97 -46
S378-4	98 -18
S378-4	98 -25
S378-4	99 -18
S378-4	99 -25
S378-5	98 -43
S378-5	99A- 4
S382-2	68 -88
S392-1	68 -90
S392-1	68D- 4
S392-1	68E- 5
S394	46 -35
S394	46A-21
S394	46A-32
S394	95 -42
S394	95 -64
S394	97 -35
S430-1	101 -40
S430-1	102 -36
S5A200	73 -15
S5A200	73A-18
S51-10	1 -15
S51-12	1 -15
S51-12	45 -19
S51-12	46 -19
S51-12	46A-20
S51-12	46B-22
S51-12	76 -22
S51-12	77 -13
S51-16	1 -15
S51-32	1 -15
S51-4	1 -15
S51-6	1 -15
S51-6	103 -15

PART NUMBER	FIGURE AND INDEX NO.
S51-8	1 -15
S51-8	116 - 8
S51-8	116 -12
S51-8	116 -15
S51-8	117 - 8
S51-8	117 -12
S51-8	117 -19
S51-8	136 - 6
S51-8	136 -10
S51-8	136 -13
S550B	121 -33
S550B	122 -44
S8S	95A-21
TA732D42	77 -64
TF10052	108 -23
TVA-1315	68B-35
TVA-1315	68C-48A
WL98293-2-.190	129 - 8
WL98293-2-.200	129 -24
WL98293-3-.310	129 -34
WRM-10	124 - 5
WRM-15	124 - 3
WRM-20	124 - 8
WRM-25	124 - 4
WRM-30	124 - 6
WRM-39-12	124 - 8
WRM-44-12	124 - 7
W98292-1-.130	73 -47A
W98292-1-.130	73A-57
W98293-3-.320	77 -32
W98293-3-320	78 -13
W98293-3-320	78A-13
XH99608-F1099	57 -21
XH99608F1099	68A-71
XR6085	123 -45
X109488	114 -28
X26263	121 -55
X26263	122 -53
ZF604	120B-20
ZF604	120C-23
Z651-1	120A-16A
Z651-1	120B- 5
Z651-1	120C- 5
Z651-13	120A-16C
Z651-13	120B- 3
Z651-13	120C- 3
Z651-3	120A-16B
Z651-3	120B- 6
Z651-3	120C- 6
OR95-1.5	124A-26
0310196-12	91 - 7
0310196-15	59A-24
0310196-15	62 -56
0310196-2	59 -16
0310196-5	91 - 6
0310280	46 - 7
0310280	98 -36
0310332	100 -43
0310453	92 - 1
0310453	92 -24
0311018-10	67 -19
0311018-10	68 -21
0311018-11	77 -17
0311029-6	68 -18
0311056-4	68 -79
0311056-4	116 -36
0311056-4	117 -34
0311056-5	67 -79
0311056-5	68 -79
0311056-5	116 -36
0311056-5	117 -34
0311056-5	117A-33
0311057-1	68 -26
0311057-1	116 - 6

PART NUMBER	FIGURE AND INDEX NO.
0311057-1	117 - 6
0311057-2	134 -54
0311057-2	135 -19
0311058-4	67 -80
0311058-4	68 -80
0311058-4	116 -38
0311058-4	117 -36
0311058-4	117A-35
0311058-5	68 -80
0311058-5	116 -38
0311058-5	117 -36
0311070-1	106 -19
0311070-1	112 -
0311070-2	112 - 6
0311071	112 - 1
0311072	112 -10
0311073	112 - 4
0311075-1	112 -18
0311076	112 - 8
0311077	112 -13
0311079	112 -17
0311310	59 -18
0311310	59A-11
0311310	62 -57
0311319-1	24 -71
0311319-1	35B-18
0311319-1	52 -22
0311319-2	24 -72
0311319-2	35B-18
0311319-2	52 -23
0311516-4	22 -27
0311538-12	67 -27
0311538-12	68A-61
0311538-12	106 -45
0311538-12	118A- 1
0311586	59 -19
0311586	59A-13
0311586	62 -59
0311623-1	57 -23
0311623-1	57A-22
0311623-1	58 -18
0311644	59 -10
0311644	59A-18
0311644	62 -32
0312155-10	125 -13
0312155-10	125A- 6
0312155-10	125B- 5
0312155-3	125 - 8
0312155-3	125B- 4
0312155-4	125 -15
0312155-4	125B- 7
0312155-6	125 -14
0312155-6	125B- 6
0320105	13 -26
0322526-6	13 -22
0322526-7	13 -22
0332136-6	19 -66
0341007-5	127 - 1
0341007-6	126 - 4
0341118	127 -15
0341118	128 -13
0341118-1	127 -15
0341118-1	128 -13
0400123-1	53 - 1
0400129-64	53 -24
0400135-1	2 -31A
0400135-1	2A-20A
0400213-6	2B-51
0400213-6	2C-41
0400213-6	70 -41
0405020-1	2B-41
0405020-1	2C-34
0411007-7	68 -74
0411007-7	101 - 2

PART NUMBER	FIGURE AND INDEX NO.
0411007-8	68 -74
0411007-8	101 - 2
0411009-6	68 -71
0411030-5	57 -10
0411030-5	57 -15
0411030-5	57 -29
0411030-5	57A- 6
0411030-5	58 - 4
0411030-6	57 -10
0411030-6	57 -15
0411030-6	57 -29
0411030-6	58 - 4
0411047	94 - 6
0411051	95 - 6
0411051-4	95 - 8
0411059-1	67 -52
0411059-1	68 -51
0411059-3	68A- 9
0411059-3	68B-10
0411069-1	68 -70
0411069-1	101 - 3
0411069-3	68 -70
0411086-17	128 -51
0411086-23	128 -51
0411129	30 - 5
0411185-7	49 -34
0411185-7	50 -32
0411221-3	94 - 1
0411224	67 -75
0411224	67 -77
0411224	68 -75
0411224	68 -77
0411232	95 -15
0411255	94 - 9
0411257	94 -12
0411257	94A-24
0411257	94A-43
0411263-5	91 -18
0411263-5	92 -15
0411263-6	91 -18
0411263-6	92 -15
0411264-5	91 -19
0411264-5	92 -16
0411264-6	91 -19
0411264-6	92 -16
0411265-1	76 -82
0411302-203	92 -18
0411306-10	92 -19
0411306-15	92 -18
0411306-16	92 -19
0411306-201	92 -18
0411306-202	92 -19
0411306-204	92 -19
0411306-205	91 -21
0411306-206	91 -22
0411306-5	91 -21
0411306-6	91 -22
0411306-9	92 -18
0411307	91 - 8
0411307	91 -36
0411307	92 - 6
0411307	92 -33
0411326-3	94 -15
0411342	29 -21
0411342	29 -22
0411369-2	92 - 2
0411369-2	92 -25
0411421-2	96 -18
0411447	24 -20
0411447	25 -13
0411489	95 -27
0411489	96 -20
0411491	100 -27
0411491-1	100 -21

PART NUMBER	FIGURE AND INDEX NO.
0411549	91 -15
0411549	92 -12
0411550	91 -14
0411550	92 -11
0411562	91 -25
0411562	92 -22
0411563	91 -38
0411563	92 -35
0411564	91 -32
0411564	92 -29
0411564-3	91 -33
0411564-3	92 -30
0411565	91 -24
0411565	92 -21
0411573-1	91 -39
0411573-1	92 -36
0411623-1	64 -10
0411623-1	64A- 8
0411680	24 - 3
0411680	26 - 7
0411680	26 -11
0411680	26 -12
0411718-5	24 - 2
0411778-2	91 - 4
0411778-2	91 -30
0411778-2	92 - 4
0411778-2	92 -27
0411778-3	92 - 4
0411778-4	92 -27
0411783	90 -45
0411783	97 -37
0411783-1	95A-18
0411803-7	76 -78
0411840	55 -18
0411840	56 -17
0411851	49 -24
0411880	95 - 3
0411881	95 - 4
0411897-3	68A-42
0411897-3	68A-48
0411897-3	68B-41
0411897-3	68B-49
0411897-3	68B-50
0411897-3	68C-46
0412007-1	121 - 7
0412007-1	122 - 8
0412146-1	36 - 6
0412147	36 - 9
0412148-1	36 -13
0412151-1	36 -10
0412151-1	36 -14
0412151-2	36 -15
0412151-3	36 -16
0412151-4	36 -11
0412151-5	36 - 7
0412467	35 -13
0412467	35A-44
0412470	36 -12
0412471-3	36 -17
0412496	30 - 9
0413028-10	102B- 7
0413028-4	102B- 8
0413028-5	102B- 7
0413028-8	102B- 8
0413028-9	102B- 8
0413126-7	67 -83
0413126-7	68 -83
0413131-3	67 - 6
0413131-3	68 - 8
0413138	123 -14
0413138	123 -39
0413140	123 -11
0413140-2	123 -13
0413140-5	123 -44

PART NUMBER	FIGURE AND INDEX NO.
0413141-1	123 -18
0413141-1	123 -26
0413142-5	123 -10
0413157	7 - 7
0413157	8 -22
0413163-11	88 -34
0413163-11	88A-16
0413163-16	88 -29
0413163-16	88A-11
0413163-17	88 -29
0413163-17	88A-11
0413163-18	88A-13
0413163-18	88 -31
0413163-203	88A- 9
0413163-204	88A- 9
0413163-205	88A- 9
0413163-206	88A- 9
0413163-25	88A- 9
0413163-25	88 -27
0413163-26	88A- 9
0413163-26	88 -27
0413163-27	88A-11
0413163-28	88A-11
0413163-5	88 -32
0413163-5	88A-14
0413163-7	88 -30
0413163-7	88A-12
0413181-2	24 -79
0413181-2	25 -26
0413195-5	51 -11
0413195-5	51A-26
0413203	88A-15
0413205-11	76A-12
0413205-11	77B-13
0413205-11	121 - 4
0413205-11	122 - 5
0413213-14	94A-45A
0413213-18	94A-45A
0413213-24	94A-45B
0413213-7	94 -22
0413213-7	94A-45
0413216	94 -24
0413216	94A-47
0413216-2	94A-47A
0413216-4	94 -25
0413216-4	94A-48
0413216-5	94A-49
0413216-6	94A-49A
0413228	88A-20
0413228	88A-20F
0413228	88 -38
0413235	57 -12A
0413235	57 -14
0413235	58 - 6A
0413235	58 - 8
0413235	123A- 3
0413235	127 -46
0413235	128 -43
0413247	13 -32
0413247	67 -53
0413247	68 -52
0413247	68A-12
0413247	68B-13
0413247	68C-16
0413279	36 - 5
0413317-1	49 -38
0413317-1	50 -34
0413322-4	129 - 8
0413323-3	52 - 8
0413323-5	49 -23
0413323-6	129 - 8
0413323-7	52 - 8
0413347-1	88A-20
0413347-1	88 -38

PART NUMBER	FIGURE AND INDEX NO.
0413372-5	94A-42
0413416-4	95A-22
0413483-1	102B- 1
0413484-15 *	57A- 7
0413484-16 *	57A- 7
0413484-16 *	123A- 1
0413484-3 *	57 -12
0413484-3 *	57A- 7
0413484-5 *	57 -12
0413484-5 *	57A- 7
0413484-5 *	123A- 1
0413485-1	102B- 7
0413485-2	102B- 7
0413517-15	70 -39
0413517-5	70 -42
0414029-1	53 -24
0422229-11	9 -18
0422229-11	10 -21
0422229-11	10A-22
0422229-3	9 -18
0422280	14 - 7
0422291	7 - 4
0422291	8 -19
0422291	8A- 5
0422292	6A-49
0422292	7 -12
0422292	7 -14
0422292	8 -28
0422292	8 -30
0422292	8A-13
0422292	8A-17
0422292	8A-21
0422344	127 -42
0422349	128 -40
0422356-1	95A-10
0422356-2	95A-10
0422357-1	95A-15
0422358-1	95A-14
0423007-1	3 -35
0423008-8	5 -45
0423008-8	6 -45
0423008-9	5 -45
0423008-9	6 -45
0423542-6	3 -21
0423564-1	3 -35
0423564-2	3 -35
0425134	106 -27
0431017-2	124A-11
0432134-4	131 -68
0432134-4	132 -68
0432138-2	100 -17
0432138-3	100 -30
0432138-4	131 -67
0432138-4	132 -67
0432138-5	131 -66
0432138-5	132 -66
0433006-7	39 - 5
0441016-13	44 - 1
0441016-24	44 - 1
0441023-2	40 - 4
0441023-2	40A- 4
0441023-2	41 - 4
0441115-3	40 - 4
0441115-3	127 -57
0441115-3	128 -52
0441115-3	41 - 4
0441115-4	41 - 4
0441119	40 -12
0441119	40A-12
0441119	41 -12
0441119	41 -43
0441139-5	40 -26
0441139-5	40A-41
0441139-5	41 -37

PART NUMBER	FIGURE AND INDEX NO.
0441139-6	40 -26
0441139-6	40A-41
0441139-6	41 -37
0441150-2	44 - 3
0441150-3	44 - 3
0441150-8	41 -39
0441150-8	44 - 2
0441150-9	41 -39
0441150-9	44 - 2
0441151	44 - 4
0441156-18	42 - 1
0441156-18	42C- 1
0442006-11	47 -35
0442006-11	48 -30
0450111	33 - 7
0450111	33 -49
0450191-1	74 -30
0450191-1	75 -24
0450277-10	84 -59
0450277-2	84 -56
0450277-2	85 -43
0450277-3	84 -55
0450277-3	85 -42
0450286	28 -43
0450311	104 -60
0450311	105 -35
0450311	105 -69
0450311	109 -14
0450311	110 -22
0450311-3	110A-19
0450311-4	75 -40
0450311-5	74 -18
0450311-5	75 -15
0450311-5	88 -22
0450311-5	88A- 7
0450311-5	89 -12
0450311-5	104 -37
0450311-5	120A-26
0450311-5	120B-31
0450311-5	120C-32
0450314	8 -23
0450314	88 -25
0450314	88A-21
0450314-1	8A- 9
0450314-1	88A-21
0500085-1	2 - 1
0500085-1	2A-14
0500085-2	2 -25
0500085-2	2A-15
0500091-5	2A-13
0500103-133	57 -33
0500103-133	57A- 2
0500103-133	58 -27
0500106-12	90 -11
0500106-121	106 -37
0500106-122	106 -38
0500106-13	90 -12
0500106-133	106 -41
0500106-14	90 - 5
0500106-144	114 -16
0500106-164	76 -21
0500106-164	77 -11
0500106-165	41 -11
0500106-166	41 -11
0500106-169	41 -42
0500106-170	77 -42
0500106-173	118 - 7
0500106-184	119 - 7
0500106-185	119 -13
0500106-196	77 -37
0500106-196	106 -43
0500106-197	77 -38
0500106-197	106 -44
0500106-202	75 -10

PART NUMBER	FIGURE AND INDEX NO.
0500106-202	106 -39
0500106-202	118A-16
0500106-205	106 -35
0500106-220	114 -17
0500106-221	116 -25
0500106-221	117 -23
0500106-248	74 -53
0500106-248	75 -43
0500106-250	77 -12
0500106-251	117 -14
0500106-251	136 -15
0500106-273	67 -18
0500106-273	68 -20
0500106-273	74 -53
0500106-273	75 -43
0500106-292	74 -55
0500106-292	113 - 2
0500106-292	114 - 2
0500106-299	119 -19
0500106-317	40 -11
0500106-317	40A-11
0500106-319	103 -34
0500106-320	103 -13
0500106-320	104 -10
0500106-320	106 -17
0500106-321	103 -20
0500106-321	104 -17
0500106-321	105 -15
0500106-321	106 -12
0500106-322	103 - 7
0500106-322	104 - 5
0500106-322	105 - 5
0500106-322	106 - 2
0500106-323	103 -33
0500106-324	103 -12
0500106-324	104 - 9
0500106-324	106 -18
0500106-325	103 -26
0500106-325	104 -23
0500106-325	105 -21
0500106-325	106 -13
0500106-326	103 - 6
0500106-326	104 - 4
0500106-326	105 - 4
0500106-326	106 - 3
0500106-327	103 -23
0500106-328	103 -19
0500106-329	103 -36
0500106-330	103 -38
0500106-331	103 -14
0500106-331	104 -11
0500106-332	103 -42
0500106-332	104 -29
0500106-332	105 -27
0500106-333	103 -29
0500106-334	107 -16
0500106-335	107 -14
0500106-336	107 -23
0500106-337	107 - 8
0500106-338	76 -20
0500106-339	116 -14
0500106-339	117A-14
0500106-340	103 -40
0500106-341	74 -56
0500106-343	76 -36
0500106-346	103 - 8
0500106-346	104 - 6
0500106-346	105 - 6
0500106-346	106 - 4
0500106-347	113 -16
0500106-348	113 -31
0500106-349	113 -32
0500106-35	90 - 4
0500106-353	103 -23

PART NUMBER	FIGURE AND INDEX NO.
0500106-353	104 -20
0500106-353	105 -18
0500106-354	103 -19
0500106-354	104 -16
0500106-354	105 -14
0500106-357	103 -29
0500106-358	106 -11
0500106-359	106 -10
0500106-360	126 -74
0500106-361	104 -32
0500106-361	105 -30
0500106-362	104 -27
0500106-363	104 -26
0500106-99	106 -34
0500118-114	74 -53
0500118-114	75 -43
0500118-96	67 -18
0500118-96	68 -20
0500118-96	74 -53
0500118-96	75 -43
0500125-1	2 -29B
0500125-1	2 -32
0500125-1	2A-16B
0500125-1	2A-21
0500125-1	94 -25
0500125-11	2 -33
0500125-11	94 -25
0500125-44	2 -32A
0500125-44	2A-21A
0500125-8	2A-22
0500125-8	94 -25
0500130-1	125 -17
0500210-24 #	63 -16
0500210-26 #	63 -10
0500210-69	53 -20
0500248-1	2 -47
0500248-1	2A-20
0500315-1	110A-26
0500315-2	110A-25
0505005-1	2B-16
0505005-1	2C-13
0505005-1	101 -38
0505005-1	102 -34
0505009-2	2B- 8
0505009-2	2C-14
0505009-2	86 - 9
0505009-3	2B-46
0505009-3	2C-35
0505020-2	2B-24
0505020-2	2C-15
0505020-2	68B-66
0510010-11	133 - 7
0510010-12	133 -11
0510010-15	133 -19
0510010-16	133 - 8
0510010-18	133 - 1
0510010-19	133 -27
0510010-2	133 -13
0510010-21	133 -28
0510010-3	133 - 5
0510010-30	133 -16
0510010-31	133 - 6
0510010-32	133 - 4
0510010-4	133 -12
0510010-5	133 -20
0510010-6	133 -21
0510010-7	133 -22
0510105-113	95 - 2
0510105-116	95 - 1
0510105-121	97 -12
0510105-122	97 -16
0510105-124	96 - 8
0510105-125	96 - 9
0510105-128	100 -22

PART NUMBER	FIGURE AND INDEX NO.
0510105-129	100 -23
0510105-13	95 - 2
0510105-131	131 -65
0510105-131	132 -65
0510105-132	131 -64
0510105-132	132 -64
0510105-151	98 - 1
0510105-151	99 - 1
0510105-152	98 -11
0510105-152	99 -11
0510105-153	45 - 6
0510105-153	99 -37
0510105-159	97 - 1
0510105-16	95 - 1
0510105-160	97 - 2
0510105-161	97 -10
0510105-162	97 -11
0510105-163	97 - 6
0510105-164	97 - 7
0510105-167	131 -63
0510105-167	132 -63
0510105-168	131 -63
0510105-168	132 -63
0510105-171	98 - 2
0510105-171	99 - 1
0510105-171	99 - 2
0510105-173	98 -40
0510105-173	99A- 1
0510105-182	96 -38
0510105-196	45 - 6
0510105-196	98 -37
0510105-199	46 - 6
0510105-199	46A- 6
0510105-199	46B- 6
0510105-199	98 -37
0510105-21	97 -12
0510105-213	94A-32
0510105-214	94A-38
0510105-215	94A-37
0510105-216	94A-41
0510105-22	97 -16
0510105-222	95 - 1
0510105-225	97 - 1
0510105-226	97 -11
0510105-227	97 -10
0510105-232	90 -28A
0510105-237	98 - 2
0510105-237	99 - 2
0510105-24	96 - 8
0510105-25	96 - 9
0510105-28	100 -22
0510105-28	131 -62
0510105-28	132 -62
0510105-29	100 -23
0510105-313	94A-32
0510105-314	94A-38
0510105-315	94A-37
0510105-316	94A-41
0510105-322	95 - 1
0510105-323	45 - 6
0510105-323	46B- 6
0510105-323	98 -37
0510105-323	99 -37
0510105-325	97 - 1
0510105-326	97 -11
0510105-327	97 -10
0510105-334	126A-17
0510105-337	98 - 2
0510105-337	99 - 2
0510105-51	98 - 1
0510105-51	99 - 1
0510105-52	98 -11
0510105-52	99 -11
0510105-59	97 - 1

PART NUMBER	FIGURE AND INDEX NO.
0510105-60	97 - 2
0510105-61	97 -10
0510105-62	97 -11
0510105-63	97 - 6
0510105-64	97 - 7
0510105-70	90 -28
0510105-71	98 - 2
0510105-71	99 - 1
0510105-71	99 - 2
0510105-73	98 -40
0510105-73	99A- 1
0510105-82	96 -38
0510110	30 -71
0510110	30 -85
0510111-10	96 -35
0510112	30 -83
0510112-1	30 -84
0510113-19	28 -21A
0510113-21	28 -21
0510113-23	28 -21
0510113-25	28 -21
0510113-26	28 -21A
0510114-50	23 -11
0510114-51	23 -12
0510128	28 -53
0510128	29 -21
0510128	29 -22
0510128-1	28 -53
0510129-3	22 -12
0510129-3	23 -13
0510129-4	22 -12
0510129-5	22 -12
0510135	28 -24
0510135	29 -23
0510136	95 -19
0510137	95 -20
0510139	29 -24
0510146	38 -10
0510146-9	38 -14
0510159	96 - 1
0510161	96 - 4
0510163	30 -39
0510163-1	30 -39
0510164	35 -14
0510164	35A-43
0510166-4	97 -53
0510166-5	97 -53
0510167	97 -59
0510169-3	97 -60
0510171-1	97 -68
0510172-3	97 -63
0510172-4	97 -64
0510173	97 -65
0510174	24 -30
0510174	25 -22
0510176	97 -62
0510177	97 -61
0510178-1	97 -55
0510181	97 -70
0510181-1	97 -71
0510183-1	22 -11
0510183-10	22 -11
0510183-2	22 -10
0510183-3	22 -11
0510183-4	22 -10
0510183-5	22 -10
0510183-6	22 -11
0510183-9	22 -10
0510184	97 -72
0510188	2 - 9
0510188	28-23
0510188	97 -67A
0510190	133 -25
0510191	2 -11

PART NUMBER	FIGURE AND INDEX NO.
0510191	2A- 9
0510191	97 -58
0510203-1	97 -61
0510205-5	59 -24
0510205-5	60 -56
0510205-5	61 -58
0510205-5	61A-58
0510205-5	63 -86
0510205-5	63C-99A
0510205-6	59 -28
0510205-6	60 -56
0510205-6	61 -58
0510205-6	61A-58
0510205-6	63 -86
0510205-6	63C-99A
0511000-11	25 -18
0511000-14	23 - 8
0511000-15	23 - 9
0511000-22	24 -13
0511000-22	25 - 7
0511000-23	24 -13
0511000-23	25 - 7
0511000-35	24 -27
0511000-35	25 -19
0511000-36	24 -17
0511000-36	25 -11
0511000-37	24 -17
0511000-37	25 -11
0511000-38	25 -20
0511000-41	23 - 7
0511000-41	27 - 1
0511000-43	24 - 7
0511000-43	25 - 4
0511000-44	24 - 8
0511000-44	25 - 5
0511000-6	24 -12
0511000-6	25 - 6
0511000-60	24 -31
0511000-60	25 -23
0511000-63	24 - 5
0511000-63	25 - 3
0511000-63	31 -11
0511000-64	23 -10
0511000-68	22 - 6
0511000-69	22 - 7
0511000-7	24 -12
0511000-7	25 - 6
0511000-70	22 - 8
0511000-73	24 -14
0511000-74	24 -14
0511000-8	24 -14
0511000-8	25 - 8
0511000-9	24 -14
0511000-9	25 - 8
0511001-131	53 - 5
0511001-133	57 -16
0511001-133	57A-10
0511001-133	58 - 9
0511001-186	53 - 8
0511035-5	68 -15
0511049	64 -11
0511049	64A- 7
0511049-1	64 -11
0511049-1	64A- 7
0511062-11	3 -13
0511062-12	3 -13
0511062-4	3 -13
0511062-5	3 -13
0511063	67 -37
0511063	68 -37
0511063	68D- 1
0511063	68E- 1
0511063	113 -10
0511063	114 - 6

PART NUMBER	FIGURE AND INDEX NO.
0511063-2	67 -37
0511063-2	68D- 1
0511063-2	68E- 1
0511063-2	113 -10
0511063-2	114 - 6
0511116	25 - 9
0511116-1	25 -10
0511116-8	24 -16
0511116-9	24 -16
0511127	106 -25
0511130	57 -18
0511130	58 -11
0511130 ¤	57A-12
0511133	24 -57
0511133	26 -23
0511145	25 -51
0511145	35 -19
0511146	23 - 6
0511146	25 -52
0511149-1	35 - 3
0511150	24 -15
0511150	25 - 8
0511150-1	24 -15
0511150-1	25 - 8
0511157-17	106 -23
0511157-18	106 -22
0511157-20	106 -19
0511165	70 - 6
0511166	70 - 5
0511168	2A- 4
0511168	2C-16
0511168	55 -15
0511174-1	64 - 5
0511176	24 -45
0511176	25 -36
0511189-1	49 -43
0511189-1	50 -37
0511189-2	49 -39
0511189-2	50 -35
0511194-4	106 -24
0511195	106 -32
0511196-1	106 -33
0511198	106 -31
0511199-20	101 -39
0511199-20	102 -35
0511199-22	110 - 3
0511199-41	109 -19
0511199-41	110 -27
0511199-45	107 - 1
0511199-45	108 - 1
0511199-45	109 -
0511232-3	70 - 2
0511232-4	24 -56
0511232-4	25 -31
0511242-1	63A- 1
0511284-3	64 -13
0511284-3	64A- 6
0511284-4	64 -13
0511284-4	64A- 6
0511286	66 -21
0511290-3	25 -12
0511290-5	24 -19
0511290-6	24 -19
0511296-1	24 -87
0511296-2	24 -87
0511299-1	120 -27
0511301-18	59 -28
0511301-18	60 -56
0511301-18	61 -58
0511301-18	63 -86
0511301-19	59 -24
0511301-19	60 -56
0511301-19	61 -58
0511301-19	63 -86

PART NUMBER	FIGURE AND INDEX NO.
0511311-11	128 -43
0511311-12	128 -43
0511311-5	123A-16
0511312-1	23 -25
0511312-1	24 -36
0511463-1	49 -18
0511463-1	50 -18
0511475-1	55 - 6
0511475-1	56 - 2
0511475-2	55 - 7
0511475-7	55 - 6
0511475-8	55 - 7
0511482-1	123 -21
0511482-3	123 -27
0511482-5 ¤	123 -29
0511482-9 ¤	123 -21
0511483-1	24 -86
0511483-1	25 -55
0511483-2	123 -43
0511484-1	24 -85
0511484-1	25 -53
0511485-1	24 -87
0511485-1	25 -54
0511782-1	94A- 9
0511783-1	94A-12
0511784-1	94A-14
0511785-1	94A-25
0511786-1	94A-19
0511786-2	94A-22
0511787-1	94A-15
0511788-1	94A-26
0511789-1	94A-31
0512000-20	25 -28
0512000-66	26 -11
0512000-66	26 -12
0512006-1 ¤	13 -16
0512046-1 ¤	55 -17
0512107-12	27 - 4
0512107-12	131 -72
0512107-12	132 -74
0512107-28	27 - 5
0512107-30	27 - 6
0512107-30	132 -73
0512107-36	23 -14
0512107-39	27 - 1
0512107-39	126 -52
0512107-40	27 - 2
0512107-41	27 - 3
0512107-43	27 - 1
0512107-43	126 -52
0512107-44	27 - 2
0512107-45	27 - 3
0512113-7	24 -42
0512113-7	25 -35
0512121-6	35 - 4
0512122	32 - 5
0512122	32A- 5
0512123	3 - 6
0512123	3A- 6
0512124-13	32 -22
0512124-15	32 -36
0512124-15	32A-50
0512124-32	32 -37
0512124-39	32 -15
0512124-40	32 -14
0512124-41	24 -23
0512124-41	32 -
0512124-42	32 -22
0512124-42	32A-33
0512124-5	32 -24
0512124-52	24 -23
0512124-52	32A-
0512124-53	32A-15
0512124-54	32A-16

PART NUMBER	FIGURE AND INDEX NO.
0512124-7	32 -25
0512124-7	32 -25
0512124-7	32A-36
0512124-73	24 -23
0512124-73	32A-
0512124-74	32A-16
0512124-75	32A-15
0512124-79	32 -11
0512124-79	32A-12
0512124-80	32 -12
0512124-80	32A-13
0512128	32 -27
0512128	32A-38
0512129	32 -26
0512129	32A-37
0512132	32 -30
0512132-1	32 -31
0512132-19	32 -30
0512132-19	32A-41
0512132-21	32 -31
0512132-21	32A-44
0512132-22	32 -31
0512132-22	32A-44
0512132-4	32 -30
0512132-4	32A-41
0512132-5	32 -31
0512132-5	32A-44
0512133	32 -23
0512133	32A-34
0512134	32 -20
0512134	32A-30
0512134-1	32 -21
0512134-1	32A-31
0512135	97 -52
0512136	95 -47
0512137	32 -10
0512137	32A-10
0512138	95 -44
0512138	95 -67
0512138-1	46 -37
0512138-1	46A-34
0512138-2	46A-23
0512139-2	32 -19
0512139-2	32A-29
0512139-3	32 -19
0512139-3	32A-29
0512140	97 -49
0512146	22 -15
0512146	23 -16
0512146-1	22 -15
0512146-1	23 -16
0512148	35 - 5
0512149-1	22 -16
0512149-1	23 -17
0512149-2	22 -16
0512149-2	23 -17
0512152	32 -34
0512152	32A-49
0512160-2	35 - 7
0512160-2	35A-45
0512160-2	126 -70
0512166-1	58 -17
0512166-3	2A- 2
0512167-10	37 -10
0512167-17	37 -11
0512167-19	37 - 78
0512167-25	37 - 9
0512167-27	37 - 8
0512171-1	37 - 4
0513003-19	126 -42
0513003-19	127 -44
0513003-6	128 -41
0513006-101	30 -18
0513006-102	30 -29

PART NUMBER		FIGURE AND INDEX NO.
0513006-103		30 -58
0513006-104		30 -65
0513006-105		30 -57
0513006-11		30 -34
0513006-11		30 -78
0513006-134		30 -88
0513006-135		30 -40
0513006-138		30 -42
0513006-139		30 -57
0513006-140		30 -65
0513006-141		30 -59
0513006-142		28 - 7
0513006-142		30 -
0513006-143		30 -11
0513006-144		30 -22
0513006-151		30 -42
0513006-21		30 -23
0513006-22		30 -28
0513006-23		30 -67
0513006-24		30 -59
0513006-25		30 -20
0513006-26		30 -31
0513006-3		30 -12
0513006-34		30 -14
0513006-35		30 -25
0513006-38		30 -15
0513006-39		30 -26
0513006-40		30 -13
0513006-41		30 -24
0513006-42		30 -19
0513006-43		30 -30
0513006-44		30 -11
0513006-45		30 -22
0513006-46		30 -13
0513006-47		30 -24
0513006-61		30 -64
0513006-61		30 -75
0513006-62		30 -65
0513006-62		30 -75
0513006-8		30 -17
0513006-9		30 -66
0513013-12		57 -28
0513013-12		58 -23
0513013-12	¤	57A-16
0513038-5		28 -28
0513039-7		68A-58
0513039-7		68B-55
0513039-7		68C-59
0513039-7		67 -31
0513039-7		68 -31
0513051-8		67 -43
0513051-8		68 -42
0513056-3		68A-18A
0513056-3		68B-18A
0513056-3		68C-20
0513112-1		28 -38
0513124-1		112 - 2
0513144-10		67 -22
0513144-10		68 -24
0513144-10		113 - 1
0513144-10		114 - 1
0513144-14		67 -23
0513144-14		68 -25
0513144-16		67 -20
0513144-16		68 -22
0513144-2		67 -21
0513144-2		68 -23
0513144-2		113 - 9
0513144-2		114 - 5
0513146-11		67 -75
0513146-11		68 -75
0513166-1		94 -23
0513166-3		94 -23
0513166-7		94A-46

PART NUMBER		FIGURE AND INDEX NO.
0513167-13		94 -19
0513167-13		94 -19
0513167-7		94 -19
0513167-7		94 -19
0513186-1		108 - 8
0513194-1		135 -84
0513208-1		123 - 3
0513208-1		123 -35
0513208-1		123 -55
0513220-11		2 -19
0513220-11		69 -16
0513220-12		2 -20
0513220-12		69 -16
0513220-13		2 -21
0513220-13		69 -16
0513220-14		2 -13
0513220-14		69 -16
0513220-2		2 -14
0513220-2		69 -16
0513220-3		2 -15
0513220-3		69 -16
0513220-4		2 -16
0513220-4		69 -16
0513220-6		2 -18
0513220-6		69 -16
0513220-9		2 -17
0513220-9		69 -16
0513238-1		89 -32
0513309-1		89 -31
0513311-1	¤	68A-18
0513311-1	¤	68B-18
0513311-2	¤	68A-18A
0513311-2	¤	68B-18A
0513311-2	¤	68C-20
0513311-7	¤	68B-18
0513311-7	¤	68C-19
0513316-9		68A- 5
0513332-204		94 -19
0513332-204		94 -19
0513332-205		94A-43
0513345-4		89 -26A
0513348-1		53 -21
0513351-1		68A-14
0513351-1		68A-21
0513351-1		68B-15
0513351-1		68B-21
0513385-3		70 -22
0513386-1		89 -26A
0513425-1		57A- 9A
0514017-1	¤	63C-21
0514017-2	¤	63C-21
0514017-3	¤	63C-20
0514018-1	¤	63C- 8
0514018-15	¤	63C- 8
0514018-3	¤	63C-10
0514024-1		63C-40
0514024-2		63C-40
0514026-11		63C-22
0514026-2		63C-43
0514026-4		63C-50
0514027-1		63C-67
0514027-2		63C-35
0514027-5		63C-67
0514027-6		63C-35
0514027-9		63C-35
0514028-10		63C-26
0514028-15		63C-26
0514028-16		63C-26
0514028-5		63C-47
0514028-5		63C-55
0514028-6		63C-46
0514029-1		63C-16
0514029-2		63C- 3
0514030-4		63C-23

PART NUMBER		FIGURE AND INDEX NO.
0514032-1		63C-57
0514033-1		63C-30
0514033-1		63C-62
0514034-1		63C-44
0514035-1		63C-41
0514035-2		63C-42
0514036-1		63C-28
0514037-1		63C-69
0514042-1		65B- 1
0514043-1		61A-51
0514047-1		63C-75
0514047-9		63C-75
0514048-1	#	61A-62
0514048-1	#	63 -89
0514048-1	#	63C-94
0514048-1	#	64A-30
0514048-9	#	61A-63
0514048-9	#	63 -92
0514048-9	#	63C-95
0514048-9	#	64A-31
0514055-1	¤	61A-14
0514055-11	¤	61A-14
0514055-3	¤	61A-16
0514058-1		61A-19
0514060-5		63C-25
0514078-5	#	54 - 1
0514101-1		63C-19
0514101-2		63C-19
0515001-1	#	63C-
0515001-10	#	63C-18
0515001-20	#	63C-
0515001-200	#	63C- 1
0515001-201	#	63C-11
0515001-210	#	63C-11
0515001-25	#	63C-
0515001-26	#	63C-
0515001-38	#	63C-18
0515001-42	#	63C- 7
0515001-7	#	63C- 7
0515002-10		65B-13
0515002-2	#	65B-
0515002-3	#	65B-10
0515002-5	#	65B-12
0515002-9		65B-11
0515020-1		57 - 7
0515020-1		57A- 4
0515020-1		58 - 3
0517003-2		51A- 1
0517006-2		49 -42
0517006-2		50 -368
0520005-3		3 -16
0520005-3		3A-44
0520008		3 -17
0520008		3A-48
0520008-1		3 -17
0520008-1		3A-48
0522101-1		3 -52
0522101-1		3A-16
0522629		14 - 3
0522629		15 - 3
0523003-40		11 - 8
0523003-40		11 -18
0523003-40		12 -16
0523003-40		12A-13
0523005-50		9 -22
0523005-50		10 -26
0523005-50		10A-28
0523005-51		9 -22
0523005-51		10 -26
0523005-51		10A-28
0523106-4		7 -24
0523106-4		8 -14
0523107		7 - 8
0523107		8 -24

PART NUMBER	FIGURE AND INDEX NO.
0523107-2	7 - 3
0523107-2	8 -18
0523107-3	7 - 3
0523107-3	8 -18
0523108	7 -10
0523108	7 -10
0523108	8 -26
0523108-3	7 -11
0523108-3	8 -27
0523110-2	7 -20
0523110-5	7 -19
0523111-2	7 -10
0523111-2	7 -13
0523111-2	8 -29
0523118-1	3 -20
0523215	9 -28
0523215	10 -32
0523215	10A-34
0523215-1	9 -28
0523215-1	10 -32
0523215-1	10A-34
0523216	9 -27
0523216	10 -31
0523216	10A-33
0523218	14 - 9
0523218	95 -59
0523219-2	4 -37
0523219-2	5 -38
0523219-2	6 -38
0523219-2	6A-37
0523219-3	4 -37
0523219-3	5 -38
0523219-3	6 -38
0523219-3	6A-37
0523219-4	4 -37
0523219-4	5 -38
0523219-4	6 -38
0523219-5	4 -37
0523219-5	5 -38
0523219-5	6 -38
0523219-6	6A-37
0523219-7	6A-37
0523221	14 - 4
0523222	14 - 5
0523223	14 - 1
0523223	95 -58
0523223-1	14 - 1
0523223-1	95 -58
0523230	4 -29
0523230	5 -33
0523230	6 -33
0523230	6A-30
0523230-1	4 -29
0523230-1	5 -33
0523230-1	6 -33
0523230-1	6A-30
0523230-4	5 -33
0523230-4	6 -33
0523230-4	6A-30
0523230-5	5 -33
0523230-5	6 -33
0523230-5	6A-30
0523230 4	4 -29
0523230 5	4 -29
0523232	4 -24
0523232	5 -28
0523232	6 -28
0523232-2	5 -28
0523232-2	6 -28
0523232-2	6A-24
0523233	4 -27
0523233-2	4 -26
0523233-20	6A-27
0523233-3	4 -28

PART NUMBER	FIGURE AND INDEX NO.
0523233-3	5 -32
0523233-3	6 -32
0523233-3	6A-29
0523233-6	5 -30
0523233-6	6 -30
0523233-6	6A-27
0523233-7	5 -31
0523233-7	6 -31
0523233-7	6A-28
0523306	9 -11
0523306	10 -12
0523306	10A-13
0523307	16 - 4
0523307-2	16 - 4
0523308	9 - 5
0523308	10 - 6
0523308	10A- 6
0523309	9 - 2
0523309	10 - 2
0523309	10A- 2
0523309-1	9 - 2
0523309-1	10 - 2
0523309-1	10A- 2
0523315	9 - 6
0523315	10 - 7
0523315	10A- 7
0523315-1	9 - 6
0523315-1	10 - 7
0523315-1	10A- 7
0523316	9 - 9
0523316-1	9 - 9
0523321-3	9 -10
0523321-4	9 -10
0523400-111	10 -20
0523400-111	10A-21
0523400-112	10 -20
0523400-112	10A-21
0523400-20	9 -21
0523400-20	10 -24
0523400-20	10A-26
0523400-21	9 -21
0523400-21	10 -24
0523400-21	10A-26
0523400-52	9 -17
0523400-53	9 -17
0523400-54	9 -16
0523400-55	9 -16
0523400-58	10 -25
0523400-59	10 -25
0523400-60	10 -20
0523400-61	10 -20
0523400-72	10 -20
0523400-73	10 -20
0523400-78	10 -25
0523400-79	10 -25
0523400-80	10 -20
0523400-81	10 -20
0523400-86	10 -25
0523400-87	10 -25
0523400-90	10 -20
0523400-91	10 -20
0523400-96	10 -25
0523400-96	10A-27
0523400-97	10 -25
0523400-97	10A-27
0523406	9 -22
0523406	10 -26
0523406-1	9 -22
0523406-1	10 -26
0523406-2	9 -22
0523406-2	10 -26
0523406-2	10A-28
0523406-3	9 -22
0523406-3	10 -26

PART NUMBER	FIGURE AND INDEX NO.
0523406-3	10A-28
0523407	4 -32
0523407	5 -43
0523407	6 -43
0523407	6A-35
0523407-1	4 -33
0523407-1	5 -43
0523407-1	6 -43
0523407-1	6A-36
0523408	4 -36
0523408	6A-45
0523409	9 -20
0523409-1	9 -19
0523409-1	10 -22
0523409-1	10A-24
0523409-2	10 -23
0523409-2	10A-25
0523509-2	5 -17
0523510	4 -16
0523510-1	4 -16
0523510-6	4 -16
0523510-6	5 -18
0523510-6	6 -18
0523510-7	4 -16
0523510-7	5 -18
0523510-7	6 -18
0523511-21	5 -19
0523511-21	6 -19
0523511-4	4 -30
0523511-4	5 -34
0523511-4	6 -34
0523511-4	6A-31
0523511-6	4 -18
0523511-6	5 -20
0523511-6	6 -20
0523511-6	6A-17
0523511-7	4 -17
0523511-8	5 -19
0523511-8	6 -19
0523512-3	4 -19
0523512-4	4 -31
0523512-4	5 -35
0523512-4	6 -35
0523512-4	6A-32
0523512-5	7 -22
0523512-7	5 -21
0523512-7	6 -21
0523513-10	4 -20
0523513-3	4 -20
0523513-4	7 -23
0523513-6	4 -20
0523513-7	5 -22
0523513-7	6 -22
0523513-8	5 -22
0523513-8	6 -22
0523513-9	4 -20
0523514-3	4 -21
0523514-4	7 -25
0523515-3	4 -22
0523515-4	7 -27
0523535	15 - 1
0523535	97 -75
0523535-1	15 - 1
0523535-1	97 -75
0523536	15 - 4
0523537	15 - 7
0523537	97 -76
0523541-43	11 - 5
0523541-43	12 - 3
0523541-43	12A- 2
0523541-44	11 - 5
0523541-44	12 - 3
0523541-44	12A- 2
0523541-45	11 - 7

PART NUMBER	FIGURE AND INDEX NO.
0523541-45	11 -20
0523541-45	12 - 4
0523541-45	12 - 9
0523541-45	12A- 3
0523541-45	12A- 6
0523541-46	11 - 6
0523541-46	11 -21
0523541-46	12 - 4
0523541-46	12 - 9
0523541-46	12A- 3
0523541-46	12A- 6
0523541-47	11 - 6
0523541-47	11 -21
0523541-47	12 - 5
0523541-47	12 -10
0523541-47	12A- 4
0523541-48	11 - 7
0523541-48	11 -20
0523541-48	12 - 5
0523541-48	12 -10
0523541-48	12A- 7
0523541-49	11 -19
0523541-49	12 -11
0523541-49	12A- 8
0523541-50	11 -19
0523541-50	12 -11
0523541-50	12A- 8
0523541-51	12 - 3
0523541-51	12A- 2
0523541-52	12 - 3
0523541-52	12A- 2
0523541-53	12 - 4
0523541-53	12 - 9
0523541-53	12A- 3
0523541-53	12A- 6
0523541-54	12 - 4
0523541-54	12 - 9
0523541-54	12A- 3
0523541-54	12A- 6
0523541-55	12 -10
0523541-55	12A- 7
0523541-56	12 - 5
0523541-56	12A- 4
0523541-57	12 -11
0523541-57	12A- 8
0523541-58	12 -11
0523541-58	12A- 8
0523541-59	12 - 5
0523541-59	12A- 4
0523541-60	12 -10
0523541-60	12A- 7
0523541-61	8 - 1
0523541-62	8 - 2
0523541-63	8 - 3
0523542-1	7 -21
0523565-200-791	5 -46
0523565-200-791	6 -46
0523565-201-791	5 -46
0523565-201-791	6 -46
0523565-21	5 -48
0523565-21	6 -48
0523565-22	5 -48
0523565-22	6 -48
0523565-29-791	5 -46
0523565-29-791	6 -46
0523565-30-791	5 -46
0523565-30-791	6 -46
0523566-1	3 -45
0523566-2	3 -45
0523566-5	3 -45
0523566-6	3 -45
0523608-2	16 - 8
0523614-1	16 - 9
0523615-1	16 -11A

PART NUMBER	FIGURE AND INDEX NO.
0523616-1	16 -13A
0523700	5 -44
0523700	6 -44
0523701-4	4 -44
0523701-4	5 -44
0523701-4	6 -44
0523702-3	3 -37
0523702-4	3 -37
0523800-10	14 -25
0523800-11	14 -25
0523800-12	14 -26
0523800-13	14 -26
0523800-16	14 -13
0523800-17	14 -13
0523800-18	14 -13
0523800-19	14 -13
0523800-24	14 -13
0523800-25	14 -13
0523800-6	14 -23
0523800-7	14 -23
0523800-8	14 -24
0523800-9	14 -24
0523806	14 -14
0523806-1	14 -14
0523807	14 -31
0523808	14 -15
0523808-2	14 -15
0523809	14 -16
0523809-1	14 -16
0523810	14 -17
0523811	14 -18
0523811-1	14 -18
0523812-2	14 -19
0523812-3	14 -19
0523813-1	14 -27
0523813-2	9 -24
0523813-2	10 -28
0523813-2	10A-30
0523813-3	9 -23
0523813-3	10 -27
0523813-3	10A-29
0523813-4	9 -25
0523813-4	10 -29
0523813-4	10A-31
0523813-5	9 -26
0523813-5	10 -30
0523813-5	10A-32
0523813-6	14 -29
0523813-7	14 -30
0523813-8	14 -28
0523814-5	14 -21
0523814-7	14 -21
0523814-8	14 -21
0523901	15 -13
0523901-1	15 -13
0523901-13	15 -24
0523901-14	15 -25
0523901-2	15 -29
0523901-29	15 -38
0523901-3	15 -29
0523901-31	15 -13
0523901-32	15 -13
0523901-35	15 -13
0523901-36	15 -30
0523901-37	15 -38
0523901-38	15 -13
0523901-39	15 -30
0523901-4	15 -30
0523901-5	15 -30
0523901-6	15 -31
0523901-7	15 -31
0523911	15 -21
0523911-1	15 -21
0523912	15 -28

PART NUMBER	FIGURE AND INDEX NO.
0523912-1	15 -22
0523914	15 -26
0523918	15 -32
0523919	15 -17
0523920	15 -16
0523921	15 -15
0523922	15 -18
0523923	15 -23
0541103-16	41 -24
0541105	40 - 7
0541105	40A- 7
0541105	41 - 7
0541111-2	40 -26
0541111-2	40A-41
0541111-2	41 -37
0541115-2	70 - 9
0541115-3	70 - 8
0541115-4	70 -11
0541115-4	70 -12
0541116-2	44 - 7
0541116-25	44 -35
0541116-26	44 -35
0541116-27	44 -36
0541116-28	44 -36
0541116-3	44 - 7
0541124-1	41 -17
0541126	127 -16
0541126	128 -14
0541126-1	127 -16
0541126-1	128 -14
0541128	126 - 5
0541128	127 -10
0541128	128 - 9
0541129	126 - 7
0541129	127 - 3
0541129	128 - 3
0541137-11	127 -37
0541137-11	128 -35
0541138-16	91 -11
0541138-16	93 -
0541138-22	93 -
0541138-5	93 - 3
0541139	93 - 1
0541140	93 - 2
0541143	93 - 5
0541144	93 - 6
0541147-2	93 -10
0541148	93 -14
0541148-1	93 - 9
0541149	93 -15
0541151	93 -16
0541161-2	43 - 7
0541162-1	70 -23
0541183-9	43 -
0541184-2	93 -10
0541184-200	93 -10
054624-3	68D- 5
054624-3	68D- 8
0550100-6	104 -41
0550100-6	105 -39
0550100-6	114 -36
0550100-9	74 -34
0550100-9	74 -57
0550100-9	75 -26
0550100-9	76 -51
0550153-1	74 - 2
0550153-1	75 - 8
0550153-1	75 - 8
0550153-1	75 - 9
0550154-2	75 - 7
0550155	75 - 6
0550156	75 - 9
0550209-1	68A-42
0550209-1	68B-41

PART NUMBER		FIGURE AND INDEX NO.
0550209-1		68C-44
0550209-1		77 -53
0550227-2		81 -
0550227-4		81B-
0560006-1		94A-
0560006-1		95 -63
0700005-90		125 - 9
0700029-1		2A-12
0700030-1		119 - 5
0700030-1		120 - 5
0700030-2		119 - 6
0700030-2		120 - 6
0700030-3		119 -11
0700030-4		119 -10
0700030-5		119 -16
0700030-6		119 -26
0700030-7		119 -25
0700030-8		119 - 3
0700030-8		120 - 3
0700030-9		119 - 4
0700030-9		120 - 4
0700031-2		18 -44
0700031-2		124 - 9
0700036-2		67 -43
0700036-2		68 -42
0700039-PC2		125 -11
0700053-1		2A-12
0700058-1		53 - 3
0700061-1		2 - 2
0700061-2		2 - 3
0700061-2		2 -30
0700064-1		2 -12
0700064-1		69 -16
0700065-1		2 -22
0700065-1		94 -25
0700067-2		129 - 1
0700067-22		129 -27
0700067-23		129 - 9
0700067-24		129 -14
0700067-24		129 -25
0700067-25		129 - 9
0700067-26		129 - 9
0700067-27		129 -14
0700067-27		129 -25
0700067-28		129 -14
0700067-28		129 -25
0700067-29		129 - 9
0700067-3		129 - 6
0700067-30		129 -14
0700067-30		129 -25
0700067-31		129 -20
0700067-32		129 -20
0700067-33		129 -20
0700067-34		129 -20
0700067-35		129 -15
0700067-37		129 -24
0700067-38		129 -19
0700067-4		129 -10
0700067-41		129 -18
0700067-42		129 -23
0700067-43		129 - 1
0700067-45		129 - 6
0700067-51		129 -10
0700069-1		129 -29
0700072-3		129 -48
0700072-4		129 -48
0700072-5		129 -49
0700072-6		129 -50
0700072-7		129 -51
0700076-1		120 -12
0700076-2		120 -12
0700083-1		129 -27
0700085-PC2		125 -12
0700087-1		105 - 9

PART NUMBER		FIGURE AND INDEX NO.
0700087-10		104 -11
0700087-10		105 -10
0700087-12		106 -10
0700087-13		105 -50
0700087-14		105 -50A
0700087-15		104 -29A
0700087-15		105 -27A
0700087-16		104 -30B
0700087-16		105 -28B
0700087-18		74 -56
0700087-19		75 -43
0700087-2		105 -24
0700087-20		113 -16A
0700087-21		118A-14
0700087-22		118A-12
0700087-23		118A- 5
0700087-24		118A- 6
0700087-26		118A-11
0700087-27		118A-13
0700087-28		117A-37
0700087-29		106 -37
0700087-29		118A- 5
0700087-30		106 -38
0700087-30		118A- 6
0700087-4		105 -52
0700087-5		105 -53
0700087-7		108 -13
0700087-8		108 -22
0700087-9		106 - 1
0700092-KA2		121 -12A
0700092-KA2		122 -13A
0700092-PA1		121 -11
0700092-PA1		122 -12
0700092-PA4		121 -12
0700092-PA4		122 -13
0700092-PA6		121 -11
0700092-PA6		122 -12
0700092-PA8		121 -12
0700092-PA8		122 -13
0700092-PC11		121 -60
0700092-PC11		122 -58
0700092-PC3		125A- 7
0700092PC3		125B-10
0700092PC4		121 -50
0700092PC4		122 -48
0700099-82		106 -41
0700099-83		118 - 7
0700099-84		74 -56
0700100-192		57 - 5
0700100-34		56 -15
0700101-143		56 - 2
0700101-144		55 - 7
0700101-144		56 - 3
0700104-24		69 -32
0700104-25		69 -32
0700104-89		59A-10
0700105-10	#	64 - 9
0700105-11	#	64 - 4
0700105-2		59A- 9
0700105-20		59 - 5
0700105-20		59A- 6
0700105-201		56 - 1
0700105-202		57 -24
0700105-202		58 -19
0700105-203		56 -
0700105-204		58 -15
0700105-21		59 - 6
0700105-226	#	53 - 2
0700105-243		56 -
0700105-247	#	53 - 1
0700105-253		57 - 1
0700105-254		57 - 3
0700105-261		56 - 5
0700105-262		56 - 6

PART NUMBER		FIGURE AND INDEX NO.
0700105-265		58 -22
0700105-266		55 -17
0700105-266		56 -16
0700105-273		54 - 3
0700105-274		54 - 4
0700105-282	#	53 -18
0700105-317		53 - 9
0700105-321		53 -17
0700105-322		53 -16
0700105-323		53 -14
0700105-351	#	64 - 6
0700105-359		59 - 6
0700105-361		59 - 4
0700105-369		59 -
0700105-385		59A-
0700105-390		59A-
0700105-396		53 -23
0700105-397		59A- 7
0700105-397		62 -10
0700105-398		59A- 1
0700105-399		59A- 1
0700105-400		59A- 7
0700105-407		58 -26
0700105-407	#	57 -32
0700105-407	#	57A-13
0700105-408		59 -
0700105-413		59 - 4
0700105-414		59 - 6
0700105-415		59 - 5
0700105-416		59 - 6
0700105-417	#	64 - 9
0700105-418		57 -25
0700105-418		58 -20
0700105-419		57 -26
0700105-419		58 -21
0700105-423		24 -77
0700105-424		24 -77
0700105-425		59A- 7
0700105-425		62 -10
0700105-427		59A-
0700105-430		59A- 6
0700105-431		59A- 9
0700105-432		59A-
0700105-433		55 -15
0700105-451		59A- 1
0700105-452		59A- 1
0700105-453		59A- 7
0700105-455		57 - 2
0700105-456		57 - 4
0700105-457	#	64 - 9
0700105-462	#	64 - 6
0700105-463		57 -30
0700105-463		58 -24
0700105-464		57 -31
0700105-464		58 -25
0700105-465	#	64 - 4
0700105-478	#	53 - 9
0700105-479		58 -12
0700105-480		58 -13
0700106-1		59 -22
0700111-1		26 -14
0700111-2		26 -14
0700112-1		26 -13
0700112-2		26 -13
0700113-1		59A-35
0700113-1		60 -36
0700113-1		63C-73
0700114-10	¤	54 - 4
0700114-11		58 - 1
0700114-11	¤	57 - 2
0700114-12		58 - 2
0700114-12	¤	57 - 4
0700114-13		57 -19
0700114-14		57 -20

PART NUMBER		FIGURE AND INDEX NO.
0700114-20	¤	57 -27
0700114-20	¤	57A-18
0700114-200	#	60 - 1
0700114-201	#	60 - 1
0700114-202	#	60 -14
0700114-203	#	60 -14
0700114-204	#	61 -16
0700114-205	#	61 -16
0700114-206	#	61 - 1
0700114-207	#	61 - 1
0700114-27		55 -15
0700114-27		56 -11
0700114-29		55 - 1
0700114-32		57 -20
0700114-33		57 -19
0700114-35	¤	57 -21
0700114-35-273		57 -21
0700114-35-273		58 -14
0700114-35-434		57 -21
0700114-40	#	60 -
0700114-42	#	60 -15
0700114-42	#	61 -17
0700114-42	#	63 -16
0700114-42	#	63A-15
0700114-43	#	60 -
0700114-44	#	60 -10
0700114-44	#	61 -12
0700114-44	#	63 -10
0700114-44	#	63A- 8
0700114-45	#	60 -15
0700114-45	#	61 -17
0700114-46	#	60 -10
0700114-46	#	61 -12
0700114-47	¤	57 -19
0700114-48	¤	57 -20
0700114-49	#	55 - 1
0700114-50	#	55 - 4
0700114-51	#	55 - 5
0700114-53	¤	55 -15
0700114-54	¤	55 -15
0700114-54-434		55 -15
0700114-55		69A-10
0700114-56	¤	57 - 4
0700114-59	¤	57 - 2
0700114-61	#	55 - 1
0700114-62	¤	53 - 2
0700114-63	#	61 -
0700114-64	#	61 -
0700114-7		55 - 5
0700114-8		55 - 4
0700114-9	¤	54 - 3
0700120-1		124 -
0700122-1	#	70 -14
0700122-2	#	70 -14
0700123-14		77A- 9
0700123-2		77A- 9
0700123-4		77A- 5
0700123-7		77A- 5
0700123-9		77A- 9
0700126-1		64 - 5A
0700128-2		2A-18
0700143-1		2 -40
0700147-1		113 -16A
0700147-10		75 -43
0700147-11		104 -29A
0700147-11		105 -27A
0700147-12		104 -30B
0700147-12		105 -28B
0700147-13		104 -32
0700147-13		105 -30
0700147-14		75 -10
0700147-14		106 -39
0700147-14		118A-16
0700147-15		108 -14

PART NUMBER		FIGURE AND INDEX NO.
0700147-16		74 -48
0700147-16		76 -54
0700147-17		75 -10
0700147-17		106 -39
0700147-17		118A-16
0700147-18		113 -16B
0700147-19		90 - 4
0700147-2		117D-20
0700147-20		90 - 5
0700147-21		90 -11
0700147-22		90 -12
0700147-28		40 -11
0700147-28		40A-11
0700147-35		120A-35
0700147-35		120B-12
0700147-35		120C-12
0700147-36		120A-36
0700147-36		120B-13
0700147-36		120C-13
0700147-37		120A-28
0700147-37		120B-21
0700147-38		120A-12
0700147-38		120B-23
0700147-39		90 - 4
0700147-4		120A-35
0700147-4		120B-12
0700147-40		90 - 5
0700147-41		90 -11
0700147-42		90 -12
0700147-43		40 -11
0700147-44		75 -43
0700147-45		118A-16
0700147-45		113 -19A
0700147-46		74 -48
0700147-46		76 -54
0700147-47		75 -10
0700147-47		106 -39
0700147-47		118A-16
0700147-48		118A-13
0700147-49		118A-14
0700147-5		120A-36
0700147-5		120B-13
0700147-50		118A-12
0700147-51		106 -37
0700147-51		118A- 5
0700147-52		106 -38
0700147-52		118A- 6
0700147-53		118A-11
0700147-54		120C-24
0700147-55		120C-26
0700147-56		120C-53
0700147-59		13 - 6D
0700147-6		120A-28
0700147-6		120B-21
0700147-7		120A-12
0700147-7		120B-23
0700147-8		77 -12
0700147-9		76 -20
0700148-1	¤	123A-29
0700151-1		2A-24
0700152-1		2 -37
0700152-2		2 -37
0700153-1		2 -34
0700154-1		2A-23
0700162-1		68A-67
0700162-1		68B-31
0700162-1		68C-33
0700162-3		68A-66
0700162-3		68B-30
0700162-3		68C-32
0700162-4		68A-66
0700162-4		68B-30
0700162-4		68C-32
0700162-6		68A-66

PART NUMBER		FIGURE AND INDEX NO.
0700162-6		68B-30
0700162-6		68C-32
0700162-7		68A-66
0700162-7		68B-30
0700162-7		68C-32
0700164-6		130 - 1
0700166-1		2 -43
0700166-1		2A-27
0700166-1		2B- 5
0700166-1		2C- 5
0700166-1		49 -41
0700166-2		2 -43
0700166-2		2A-27
0700166-2		2B- 5
0700166-2		2C- 5
0700166-2		50 -36A
0700167-2		2 -44
0700167-2		68A-69
0700167-2		68B-43
0700167-3		2 - 4
0700173-1		2 -50
0700173-2		2A-30
0700174-1		2A-23B
0700175-1		2 -34B
0700189-2		68A-65
0700189-9		68B-29
0700189-9		68C-31
0700191-1	¤	55 -15
0700191-2	¤	55 -15
0700191-3	¤	55 -15
0700193-16		28 - 8
0700193-16		68B- 1
0700193-2		28 - 8
0700193-2		68B- 1
0700195-1	¤	68B-23
0700195-11	¤	68B-23
0700195-12	¤	68B-23
0700195-3	¤	68B-23
0700195-4	¤	68B-23
0700195-6	¤	68B-23
0700195-8	¤	68B-23
0700197-1		2 -34D
0700197-1		2A-23D
0700214-1		2B-31
0700214-1		2C-29
0700309-2		76 -18A
0700309-2		77 -49
0700309-2		84 - 2
0700309-5		84 - 5
0700313-25		86 - 6
0700313-64		86 - 7
0700313-74		86 - 7
0700318-2		76 -18
0700318-2		77 -48
0700318-2		84 - 7
0700318-3		84 - 9
0700318-4		84 - 8
0700318-7		77A-10
0700318-7		84 -10
0700318-8		77A-12
0700319-12		86 - 5
0700319-13		2 - 9A
0700319-13		2A-11
0700319-13		86 - 9
0700319-5		86 - 2
0700319-6		86 - 1
0700320-1		59 -36
0700320-1		59A-39
0700320-1		62 -13
0700320-1		64 -21
0700320-1		64A- 5
0700322-4		88 -10
0700322-4		88A-27
0700322-8		88A-44

PART NUMBER		FIGURE AND INDEX NO.
0700322-9		88A-28
0700325-2		88 - 7
0700325-2		88A-24
0700326-1		88 - 2
0700327-1		88 - 1
0700329-200		86 - 1
0700329-5		86 - 2
0700616-1		123 -51
0700616-2		123 -54
0700617-1		123 -60
0700626-1		88 -11
0700626-1		88A-30
0700630-10	#	63 -
0700630-11	#	63 -
0700630-12	#	63 -
0700630-202	#	63 -14
0700630-203	#	63 -14
0700630-204	#	63 -14
0700630-207	#	63 - 1
0700630-208	#	63 - 1
0700630-224	#	63 - 1
0700630-225	#	63 - 1
0700630-226	#	63 - 1
0700630-41	#	63 -
0700630-42	#	63 -
0700630-47	#	63 -
0700630-48	#	63 -
0700630-9	#	63 -
0700631-5		63 -24
0700631-5	¤	63 -24
0700631-6		63 -24
0700631-6	¤	63 -24
0700633-1		63 -32
0700633-1		63B- 6
0700633-2		63 -31
0700633-2		63B- 4
0700633-4		63 -32
0700633-4		63B- 6
0700633-5		63C-53
0700634-1		63 -38
0700634-1		63B- 1
0700636-1		63 -80
0700638-1		63 -40
0700639-1		63 -29
0700639-2		63 -30
0700639-2		63B-35
0700639-3		63B-34
0700640-1		63 -25
0700640-2		63 -25
0700640-5		63 -26
0700640-6		63 -26
0700641-1		63 -27
0700641-2		63 -28
0700641-3		63B-41
0700641-4		63B-42
0700641-5		63 -27
0700642-1		63 -54
0700643-1		63 -56
0700644-1		63 -59
0700645-1		63 -65
0700645-1		63B-38
0700645-2		63 -66
0700645-2		63B-39
0700645-3		63 -67
0700645-3		63B-40
0700645-4		63 -68
0700645-4		63B-40
0700646-1	¤	63 -19
0700646-2	¤	63 -20
0700646-3	¤	63A-18
0700646-4	¤	63A-19
0700692-1		8A-10
0700719-1	¤	63A-28
0700720-1		2A-16

PART NUMBER	FIGURE AND INDEX NO.
0700721-1	2 -29
0700739-1	2A-23A
0700740-1	2 -34A
0700742-1	2 -32B
0700742-1	2A-21B
0700742-1	2B- 1
0700742-1	2C- 3
0700745-1	2 -34C
0700745-1	2A-23C
0700748-1	2 -29B
0700748-1	2A-16B
0700750-1	2A-16A
0700752-1	2 -29A
0700756-1	69A-10
0701028-2	102A- 1
0705004-1	2B-13
0705004-1	2C-10
0705004-1	97 -58
0705005-1	2B- 9
0705005-1	68B-43
0705005-2	2B- 9
0705006-1	2B-10
0705006-1	2C-23
0705006-2	2B-10
0705006-2	2C-23
0705014-1	2B-10A
0705014-1	2C-24
0705014-2	2B-10A
0705014-2	2C-24
0705015-1	2B- 2A
0705015-1	2C- 1A
0705015-2	2C- 2A
0705015-3	2B- 3A
0705019-1	2B-28
0705019-2	2B-28
0705019-3	2B-28
0705019-4	2B-28
0705021-2	2B-16
0705021-2	2C-13
0705022-1	2B-30
0705022-1	2C-28
0705023-1	2C-30
0705023-1	13 -42
0705023-2	2C-30
0705023-2	13 -43
0705023-4	2B-32
0705023-4	13 -42
0705023-5	2B-32
0705023-5	13 -44
0705023-6	2B-32
0705023-6	13 -43
0705023-7	2C-30
0705023-7	13 -44
0705028-1	2B-47
0705028-1	2C-37
0705028-1	94B-27
0705029-1	2B- 2B
0705029-2	2B- 3B
0705030-1	2B-35
0705030-2	2B-36
0705031-1	2B-37
0705032-1	2C-38
0705032-2	2B-50
0705033-1	2C-33
0705033-2	2B-42
0705034-1	2C-39
0705034-2	2B-49
0710001-1	131 -15
0710001-1	132 -15
0710001-10	131 -16
0710001-10	132 -16
0710001-11	131 -49
0710001-11	132 -49
0710001-12	131 -48

PART NUMBER	FIGURE AND INDEX NO.
0710001-12	132 -48
0710001-13	131 -44
0710001-13	132 -44
0710001-14	131 -39
0710001-14	132 -39
0710001-15	131 -45
0710001-15	132 -45
0710001-16	131 - 4
0710001-16	132 - 4
0710001-17	131 - 6
0710001-17	132 - 6
0710001-19	131 -17
0710001-19	132 -17
0710001-2	131 -20
0710001-2	132 -20
0710001-20	131 -31
0710001-20	132 -31
0710001-23	131 - 1
0710001-23	132 - 1
0710001-25	131 - 5
0710001-25	132 - 5
0710001-26	131 -34
0710001-26	131 -36
0710001-26	132 -34
0710001-26	132 -36
0710001-3	131 - 7
0710001-3	132 - 7
0710001-30	131 -53
0710001-30	132 -53
0710001-31	131 -54
0710001-31	132 -54
0710001-32	131 -57
0710001-32	132 -57
0710001-34	131 -51
0710001-34	132 -51
0710001-36	131 -60
0710001-36	132 -60
0710001-4	131 -30
0710001-4	132 -30
0710001-42	131 -42
0710001-42	132 -42
0710001-45	131 -46
0710001-45	132 -46
0710001-46	131 -19
0710001-46	131 -19A
0710001-46	131 -19A
0710001-46	131 -28
0710001-46	131 -33
0710001-46	132 -19
0710001-46	132 -28
0710001-46	132 -33
0710001-49	132 -69
0710001-5	131 - 9
0710001-5	132 - 9
0710001-50	131 -70
0710001-50	132 -70
0710001-51	131 -71
0710001-51	132 -71
0710001-52	132 -72
0710001-54	131 -11
0710001-54	132 -11
0710001-56	131 -73
0710001-57	131 -74
0710001-58	131 -75
0710001-59	131 -76
0710001-6	131 -10
0710001-6	132 -10
0710001-60	131 -77
0710001-61	131 -78
0710001-62	131 - 8
0710001-62	131 -21
0710001-62	132 - 8
0710001-62	132 -21
0710001-64	131 -69

PART NUMBER	FIGURE AND INDEX NO.
0710001-72	131 -44
0710001-73	131 -39
0710001-74	131 -77
0710001-8	131 -12
0710001-8	132 -12
0710003-10	24 -52
0710003-12	24 -47
0710003-16	22 - 5
0710003-16	23 - 4
0710003-18	22 - 4
0710003-18	23 - 5
0710003-19	24 -27A
0710003-3	24 -33
0710003-4	24 -33
0710003-40	24 -17A
0710003-40	24 -17B
0710003-41	24 -17A
0710003-41	24 -17B
0710003-5	24 -46
0710003-6	24 -46
0710003-7	24 -53
0710003-8	24 -53
0710003-9	24 -55
0710004-3	24 -59
0710005-1	24 -37
0710005-2	24 -38
0710006-1	24 -25
0710006-2	24 -25
0710006-4	24 -26
0710007-1	24 -48
0710007-3	24 -48
0710008-1	126 -15
0710008-3	24 -45
0710009-1	35 -15
0710009-1	35A-47
0710009-3	35A-47
0710010-10	126 -31
0710010-11	126 -37
0710010-15	126 -48
0710010-16	35A-58A
0710010-16	126 -39
0710010-17	126 -34
0710010-18	126 -34
0710010-22	126 -38
0710010-23	126 -48
0710010-3	126 -28
0710010-4	126 -28
0710010-5	126 -29
0710010-6	126 -29
0710010-7	126 -30
0710010-8	126 -30
0710010-9	126 -31
0710011-1	35 - 6
0710011-1	66 -14
0710013-5	88A-34
0710014-3	88A-42
0710014-4	88A-43
0710014-8	88A-39
0710015-13	88A-37
0710015-6	88A-41
0710020-14	25 -32
0710022-2	88A-39A
0710023-1	26 - 9
0710023-2	26 -10
0710024-1	26 - 8
0710024-1	26 - 8
0710024-2	26 - 8
0710024-3	26 - 8
0710025-1	25 -33
0710025-1	126 -27
0710025-1	127 -29
0710025-1	128 -27
0710025-2	25 -29
0710026-1	26 -16

PART NUMBER	FIGURE AND INDEX NO.
0710026-2	26 -16
0710026-3	26 -18
0710026-4	26 -18
0710026-5	26 -19
0710026-6	26 -19
0710031-1	24 -62
0710031-4	24 -62
0710031-4	35A-66
0710034-1	24 -32
0710103-2	123 - 7
0710103-3	123 -
0710103-5	123 - 2
0710104-1	24 -85
0710105-3	26 -22
0710105-4	26 -22
0710106-3	26 -24
0710106-4	26 -24
0710107-3	26 -25
0710107-4	26 -25
0710108-3	26 -15
0710109-1	22 -18
0710109-1	23 -19
0710109-2	22 -19
0710109-2	23 -20
0710110-1	26 -20
0710110-2	26 -20
0710111-1	26 -21
0710111-2	26 -21
0710112-1	26 -20
0710112-2	26 -20
0710113-3	26 -18
0710113-4	26 -18
0710113-5	26 -17
0710113-6	26 -17
0710302-1	59A-25
0710302-1	62 -66
0710304-2	59 -11
0710304-2	59A-20
0710306-1	59A-37
0710308-1	59A-28
0710308-1	62 -69
0710312-2	59A-33
0710312-2	60 -47
0710312-2	62 -21
0710312-2	63 -76
0710313-2	59A- 4
0710313-2	62 - 6
0710316-1	59 - 7
0710316-1	59A-15
0710317-1	59A-26
0710317-1	62 -68
0710639-2	46B-57
0710639-5	46B-32
0710641-1	120A-44
0710641-1	120B-40
0710641-1	120C-41
0710642-1	120A-38
0710642-1	120B-34
0710642-2	120C-35
0710643-1	120A-46
0710643-1	120B-42
0710643-1	120C-43
0710644-1	120A-45
0710644-1	120B-41
0710644-1	120C-42
0710645-1	120A-46
0710645-1	120B-43
0710645-1	120C-44
0710646-1 ¤	120A-47
0710646-1 ¤	120B-44
0710646-1 ¤	120C-45
0710647-1 ¤	120A-48
0710647-1 ¤	120B-45
0710647-1 ¤	120C-46

PART NUMBER	FIGURE AND INDEX NO.
0710648-1	120A-34
0710648-1	120B- 9
0710648-1	120C- 9
0710650-1	120A-17
0710650-1	120B-59
0710650-1	120C-60
0710650-1	120C-61
0710650-2	120A-10
0710650-2	120B-58
0710652-1 ¤	120A- 9
0710652-1 ¤	120B-57
0710652-1 ¤	120C-59
0710656-1	24 -19
0710656-2	24 -19
0711001-25	49 - 8
0711001-26	50 -10
0711001-29	49 -17
0711001-29	50 -17
0711001-35	49 -14
0711001-36	50 -14
0711001-43	49 -10
0711001-45	49 - 9
0711001-52	49 -15
0711001-52	50 -15
0711003	24 -34
0711003	25 -16
0711006-1	22 -23
0711006-1	23 -27
0711006-2	22 -24
0711006-2	23 -27
0711016-1	51 -28
0711016-1	51A- 4
0711017-1	51 -16
0711018-19	51 - 6
0711018-20	51 - 7
0711018-25	51 - 8
0711018-27	51 - 4
0711018-27	51 -29
0711018-32	51 -24
0711018-33	51 -24
0711018-36	51 -17
0711018-37	51 -17
0711019-1	51 -15
0711021-4	49 -31
0711021-4	50 -29
0711021-7	49 -36
0711021-7	50 -38
0711021-9	49 -33
0711021-9	50 -31
0711023-100	50 - 1
0711023-101	49 - 1
0711023-104	50 - 1
0711023-105	49 - 1
0711023-14	49 -19
0711023-14	50 -19
0711023-15	49 -20
0711023-15	50 -20
0711023-200	50 - 1
0711023-201	49 - 1
0711023-202	50 - 1
0711023-203	49 - 1
0711023-204	50 - 1
0711023-205	49 - 1
0711023-61	49 - 1
0711023-72	50 - 1
0711023-75	49 - 1
0711023-76	50 - 1
0711023-77	50 - 1
0711023-85	49 - 1
0711023-86	50 - 1
0711023-94	50 - 1
0711023-95	49 - 1
0711024-4	32 -16
0711027-1	49 -40

PART NUMBER		FIGURE AND INDEX NO.
0711027-1		50 -36
0711029-1		51 -10
0711029-2		51 -10
0711032-2		51 -21
0711033-1		49 -24A
0711037-1		49 - 6
0711037-10		49 - 7
0711037-11		50 - 8
0711037-2		50 - 6
0711037-3		49 - 7
0711037-4		50 - 8
0711037-5		49 - 6
0711037-6		50 - 6
0711038-1		49 - 6
0711038-1		49 - 7
0711038-1		50 - 7
0711038-1		50 - 9
0711039-1		49 -12
0711040-1		49 -11
0711040-14		50 -11
0711040-2		50 -11
0711050-19		49 -24A
0711050-20		50 -22
0711050-202		50 -22
0711050-203		49 -24A
0711050-5		49 -28
0711050-6		50 -26
0711051-1		49 -26
0711051-1		50 -24
0711051-2		49 -26
0711051-2		50 -24
0711053-1		24 -63
0711054-2		24 -61
0711059-1		126 -62
0711059-1		126 -66
0711059-1		126 -69
0711059-1		127 -59
0711060-1		51 -14
0711061-1		49 -22
0711061-1		51 -
0711061-2		50 -22
0711061-2		51 -
0711062-1		51 - 2
0711062-2		51 - 2
0711063-1		51 - 9
0711063-2		51 - 9
0711063-6		51A-23
0711066-1		30 - 1
0711079-1		58 -19
0711079-1		66 -13
0711079-1	¤	57 -24
0711079-1	¤	57A-17
0711079-6	¤	57 -24
0711079-6	¤	57A-17
0711080-1		66 - 8
0711080-1	#	65 -17
0711083-1		64A-24
0711083-1		65 -33
0711083-1		65 -33
0711083-1		65 -33
0711083-1		65A-13
0711083-1		65A-13
0711083-1		65B-17
0711083-1		66 -17
0711083-1		70 -24
0711084-15		24 -51
0711084-16		24 -51
0711085-1		55 - 2
0711086-1		126 - 6
0711086-2		126 -22
0711086-5		126 -22
0711086-6		126 - 6
0711087-1		126 -16
0711087-2		126 -16

PART NUMBER		FIGURE AND INDEX NO.
0711088-1		126 -20
0711088-2		126 -20
0711088-3		126 -20
0711088-4		126 -20
0711089-1		126 -15
0711089-2		126 -15
0711090-1		24 -82
0711090-2		24 -82
0711091-3		24 -50
0711091-4		24 -50
0711091-5		24 -49
0711091-6		24 -49
0711093-1		49 -36
0711093-1		50 -38
0711094-11	#	65 - 1
0711094-3	#	65 - 6
0711094-4	#	65 - 1
0711094-5	#	65 - 7
0711095-1		126 -41
0711096-1		126 -47
0711096-2		126 -47
0711097-2		66 - 1
0711097-21		65 -21
0711097-21		66 -12
0711097-25	#	65 -21
0711097-28	#	65 -18
0711097-4		66 - 9
0711097-4	#	65 -21
0711097-5	#	65 -18
0711098-2		65 -10
0711098-2		65 -24
0711098-2		65A- 6
0711098-3		65 -28
0711098-3		66 - 5
0711098-4		65 -28
0711098-4		66 - 5
0711098-5		65 -28
0711098-6		65 -28
0711100-11		35 - 2
0711100-12		35 - 1
0711100-14		35A-37
0711100-14		35B-28
0711100-15		35A-38
0711100-16		35A-37
0711100-17		35A-38
0711100-18		35A-38
0711100-19		35A-37
0711100-20		35A-37
0711100-20		35B-28
0711100-21		35A-38
0711101-10		24 -74
0711101-10		25 -39
0711101-11		24 -75
0711101-11		25 -40
0711101-15		24 -68
0711101-15		25 -44
0711101-16		24 -69
0711101-16		25 -45
0711101-17		24 -60
0711101-17		25 -49
0711101-20		126 -33A
0711101-20		127 -33
0711101-20		128 -31
0711101-29		52 - 1
0711101-32		25 -38
0711101-33		52 - 1
0711101-4		24 -65
0711101-4		25 -41
0711101-40		52 - 1
0711101-42		24 -66
0711101-43		24 -69
0711101-44		126 -33A
0711101-6		24 -67
0711101-6		25 -43

PART NUMBER		FIGURE AND INDEX NO.
0711101-7		24 -70
0711101-7		25 -46
0711101-8		24 -66
0711101-8		25 -42
0711102		52 - 2
0711111-1		52 - 9
0711112-10		24 -40
0711112-11		127 -52
0711112-11		128 -48
0711112-12		24 -44A
0711112-14		24 -41
0711112-3		24 -44A
0711112-4		126 -19
0711112-5		127 -52
0711112-5		128 -48
0711112-8		24 -41
0711112-8		126 -21
0711112-9		24 -40
0711113-1		26 - 4
0711113-2		26 - 5
0711114-1		26 - 3
0711114-2		26 - 3
0711115-1		26 - 6
0711115-2		26 - 6
0711116-1		24 -58
0711117-1		35 -17
0711118-1		26 - 7
0711121-2		70 - 5
0711122-1		65 - 7
0711122-1		65A- 1
0711128-1		65 -14
0711129-1		24 -83
0711129-2		65 - 4
0711129-3		65 - 2
0711129-4		65 -15
0711129-5		24 -82
0711131-3		24 -84
0711131-3		25 -47
0711131-4		24 -84
0711131-4		25 -47
0711132-1		51 - 5
0711132-2		51 - 5
0711133-1		127 -46
0711133-11		57 -12
0711133-11		58 - 6
0711133-11		123A-
0711133-2		57 -13
0711133-2		58 - 7
0711133-2		127 -46
0711133-21		57 -12
0711133-21		58 - 6
0711133-21		123A-
0711133-22		58 - 7
0711133-22	¤	57 -13
0711133-23		57 -12
0711133-23		58 - 6
0711133-23		123A- 2
0711133-29		58 - 6
0711133-29	¤	57 -12
0711133-32	¤	57 -12
0711133-32	¤	123A- 1
0711133-39	¤	57 -12
0711133-40	¤	57 -13
0711133-40	¤	57A- 8
0711133-41	¤	57 -12
0711133-41	¤	123A- 1
0711133-6		57 -12
0711133-6		58 - 6
0711133-6		123A- 2
0711133-72	¤	57A- 8
0711134-1		52 - 9
0711135-1		126 -78
0711138-1		126 -78
0711138-2		126 -78

PART NUMBER	FIGURE AND INDEX NO.
0711138-3	126 -78
0711138-4	126 -78
0711653-3	51A- 1
0711667-1	60 - 5
0711667-1	61 - 6
0711667-1	61A- 6
0711667-1	63 - 5
0711668-1	60 - 4
0711668-1	61 - 5
0711668-1	61A- 5
0711668-1	63 - 4
0711687-2	46B-33
0711687-3	46B-36
0711687-6	46B-42
0711691-1	123A- 6
0711691-1	123A-11
0711693-1	22 - 6
0711693-2	22 - 8
0711693-3	22 - 7
0711693-4	22 - 7
0711693-4	22 - 8
0711693-5	22 - 6
0711693-6	22 - 7
0711693-6	22 - 8
0711696-1	32A-11
0711696-1	95 -72
0711696-2	95 -73
0711697-2	32 -24
0711697-2	32A-35
0711698-3	32A-26
0711698-4	32A-26
0711698-5	32A-28
0711699-1	32A-17
0711699-2	32A-17
0711702-16 #	65A- 2
0711702-20 #	65A- 3
0711702-29 #	65A- 2
0711702-5 #	65A- 7
0711702-6 #	65A- 7
0711702-7 #	65A- 4
0711702-8 #	65A- 4
0711704-1	35A-39
0711705-1	52 -12
0711709-1	52 -13
0711709-2	52 -14
0711710-5	22 -23
0711710-6	22 -24
0711786-1	24 -59
0711788-1	51A- 4
0711794-1	35A-43A
0711795-1	35A-47A
0711801-2	24 -44
0712000-13	35A-37
0712000-2	35 -39
0712000-2	35A- 1
0712000-31	35 -23
0712000-31	35A- 2
0712000-32	35 -32
0712000-32	35A- 3
0712000-34	35 -26
0712000-34	35A- 6
0712000-35	35 -35
0712000-35	35A- 7
0712000-36	35 -38
0712000-36	35A- 8
0712000-38	35 -36
0712000-38	35A- 4
0712000-7	38 -24
0712001-1	35 -52
0712001-1	35A-68
0712002-1	35 -51
0712002-1	35A-67
0712004-1	35 - 5
0712004-1	35A-42

PART NUMBER	FIGURE AND INDEX NO.
0712005-1	35 -20
0712005-1	35A-53
0712006-1	35 -30
0712006-1	35A-57
0712006-2	35 -30
0712006-2	35A-58
0712007-1	35 -24
0712007-1	35A-27
0712007-2	35 -37
0712007-2	35A-33
0712007-3	35 -37
0712007-3	35A-34
0712007-4	35 -25
0712007-4	35A-28
0712007-4	120B-79
0712007-4	120C-81
0712007-5	35 -33
0712007-5	35A-29
0712007-6	35 -34
0712007-6	35A-30
0712007-7	35 -34
0712007-7	35A-31
0712008-1	35 -48
0712008-1	35A-48
0712008-1	65B-15
0712008-1	66 -15
0712008-2	35A-48
0712008-2	65B-15
0712009-1	35 -49
0712009-1	35A-49
0712009-1	65B-16
0712009-1	66 -16
0712010-1	37 -
0712010-2	35A-63
0712010-2	37 -
0712010-3	36 - 6
0712013-10	35B- 1
0712013-18	35B-22
0712013-20	35B-20
0712013-22	35A-22
0712013-23	35B-10
0712013-24	35B-27
0712013-25	35B-11
0712013-26	35B- 9
0712013-27	35B- 6
0712013-28	35B-12
0712013-29	35B-13
0712013-3	35B-29
0712013-30	35B-17
0712013-31	35B-15
0712013-33	35B-38
0712013-34	35B-36
0712013-35	35B-37
0712013-36	35B-35
0712013-37	35B- 2
0712013-38	35B-14
0712013-49	35B-36
0712013-50	35B-37
0712013-51	35A-26
0712013-9	35B-16
0712014-1	120A- 3
0712014-1	120B-73
0712014-1	120C-75
0712014-1	126 -40
0712014-10	120C-76
0712014-2	120A- 4
0712014-2	120B-74
0712014-2	120C-76
0712014-2	126 -40
0712014-6	120A- 5
0712014-6	120B-75
0712014-6	120C-77
0712014-7	120A- 6
0712014-7	120B-76

PART NUMBER	FIGURE AND INDEX NO.
0712014-7	120C-78
0712014-8	120C-77
0712014-9	120C-78
0712015-1	35 -27
0712015-1	35A-35
0712015-2	35 -27
0712015-2	35A-36
0712016-1	35A-32
0712020-1	35B-25
0712022-1	35B- 5
0712026-1	35B-21
0712027-1	35B-28
0712028-1	35B-34
0712030-1	35B-33
0712031-1	121 -51
0712031-1	122 -49
0712043-1	32A-41
0712043-2	32A-44
0712201-2	35 -22
0712201-2	35A-52
0712201-4	35 -20
0712201-4	35A-50
0712201-5	35 -19
0712201-5	35A-49
0712202-4	35 -30
0712202-4	35A-55
0712202-5	35 -29
0712202-5	35A-54
0712202-7	35A-54
0712204-4	38 -19
0712204-5	38 -18
0712205-10	38 -20
0712205-13	38 -19
0712205-14	38 -19
0712206	38 -27
0712206-2	38 -29
0712207-1	38 -25
0712207-2	38 -26
0712209	35 -21
0712212	35 -31
0712212	35A-56
0712213	17 -41
0712213	18 -43
0712301-1	38 -34
0712301-2	38 -35
0712301-3	38 -36
0712301-4	38 -37
0712302-1	38 -30
0712302-2	38 -30
0712303-1	35 -44
0712303-1	35A-61
0712303-2	35 -44
0712303-2	35A-61
0712304-1	35 -51
0712304-1	35A-67
0712304-10	38 -32
0712304-12	35 -52
0712304-12	35A-68
0712304-3	38 -31
0712304-4	38 -31
0712305-3	38 -22
0712305-4	38 -22
0712306-10	38 - 4
0712306-9	38 - 3
0712307-1	19 -46
0712307-2	19 -47
0712309-1	98 -28
0712309-1	99 -28
0712309-10	35 -47
0712309-10	35A-12
0712309-11	35 -36
0712309-11	35A- 5
0712309-12	35 -36
0712309-12	35A- 5

PART NUMBER	FIGURE AND INDEX NO.
0712309-15	38 - 5
0712309-4	38 - 5
0712309-5	35 -45
0712309-5	35A-59
0712309-5	98 -32
0712309-5	99 -32
0712309-6	35 -45
0712309-6	35A-59
0712309-6	98 -33
0712309-6	99 -33
0712309-7	35 -46
0712309-7	35A-60
0712309-7	98 -34
0712309-7	99 -34
0712309-8	35 -46
0712309-8	35A-60
0712309-8	98 -35
0712309-8	99 -35
0712309-9	35 -47
0712309-9	35A-12
0712311-14	38 - 8
0712311-15	38 - 1
0712311-3	38 - 9
0712311-7	38 - 2
0712400-11	39 - 1
0712400-12	39 - 4
0712400-13	39 - 1
0712400-15	39 - 5
0712400-4	39 - 5
0712400-9	39 - 1
0712500-1	100 -36
0712500-10	100 -42
0712500-11	100 -49
0712500-13	100 -53
0712500-14	100 -39
0712500-16	100 -47
0712500-17	100 -52
0712500-18	100 -55
0712500-19	100 -58
0712500-2	100 -37
0712500-5	100 -38
0712500-6	100 -38
0712500-7	100 -50
0712500-8	100 -40
0712500-9	100 -46
0712501	100 -51
0712502	100 -54
0712518-1	24 -49A
0712518-2	24 -49A
0712601	36 -
0712601-2	36 - 1
0712601-2	37 - 3
0712601-3	36 - 2
0712601-3	37 - 1
0712601-4	36 - 4
0712601-4	37 - 5
0712601-6	36 - 1
0712601-6	37 - 3
0712601-8	36 - 2
0712601-8	37 - 1
0712603-2	121 - 9
0712603-2	122 -10
0712605-201	121 - 6
0712605-201	122 - 7
0712655-1	37 - 7A
0712658-1	35A-20
0712659-1	35A-25
0712660-10	35A-15
0712660-2	35A-15
0712660-4	35A-21
0712660-6	35A-24
0712660-8	35A-54
0712661-1	35A-16
0712662-1	35A-17

PART NUMBER	FIGURE AND INDEX NO.
0712663-1	35A-15A
0712663-2	35A-15B
0712663-3	35A-15C
0712663-4	35A-15D
0712760-1	35A-64
0712760-2	35A-64
0712761-1	70 -32
0712762-1	35A-65
0712762-2	35A-65
0712763-1	24 -54A
0712763-2	24 -54A
0712764-2	126A- 1
0713001-2	55 - 9
0713001-3	55 - 8
0713002-1	29 -11
0713002-10	28 -29
0713002-12	28 -34
0713002-2	29 -16
0713002-8	28 -30
0713002-8	29 -12
0713002-9	29 -10
0713003-45	89 -26
0713003-74	34 -28
0713003-74	34A-24
0713003-74	121 -14
0713003-74	122 -16
0713005-3	29 -10
0713005-4	29 -10
0713006	29 - 9
0713007-7	29 - 4
0713007-8	29 - 4
0713008-1	28 -22
0713008-1	29 -17
0713008-2	28 -22A
0713008-2	29 -17
0713008-4	28 -22A
0713009-1	69 -14
0713009-1	69 -30
0713009-2	69 - 4
0713009-2	69 -21
0713011-12	70 -15
0713015-10	28 -35A
0713015-6	29 -25
0713015-8	28 -35
0713017-22	123A-14
0713018-1	16 - 6
0713018-3	40 - 3
0713018-3	40A- 3
0713018-3	41 - 3
0713018-4	40 - 1
0713018-4	40A- 1
0713018-4	41 - 1
0713018-5	40 - 1
0713018-5	40A- 1
0713018-5	41 - 1
0713019-102	89 -15
0713019-105	89 -15
0713019-33	84 -12
0713019-33	85 -56
0713019-7	89 -27
0713019-86	89 -20
0713019-86	89 -20A
0713019-91	89 -22
0713019-94	89 -28
0713023-3	100 -10
0713023-7	29 -25
0713023-7	100 - 9
0713025-1	100 - 3
0713025-6	100 - 1
0713026-4	67 -36
0713026-4	67 -39
0713026-4	68 -34
0713026-4	68 -36
0713026-4	68 -38

PART NUMBER	FIGURE AND INDEX NO.
0713026-4	68D- 9
0713026-4	68E- 6
0713026-4	68E- 6A
0713026-4	101 -31
0713026-4	102 -28
0713026-4	124 -14
0713026-5	67 -35
0713026-5	68 -35
0713026-5	68D- 2
0713026-6	68B-61
0713026-6	68C-64
0713026-6	95B-20
0713026-6	95B-42
0713026-9	67 -34
0713026-9	67 -39
0713026-9	68 -38
0713028-3	67 -66
0713028-3	68 -66
0713028-3	68A-17
0713028-3	68B-17
0713028-8	67 -66
0713028-8	68 -66
0713028-8	68A-17
0713028-8	68B-17
0713029	123 - 8
0713029	123 -31
0713029	123A- 4
0713032	100 -10
0713032	100A- 8
0713032-1	100 -15
0713032-1	100A-13
0713032-2	100 -16
0713032-2	100A-14
0713032-3	100 -14
0713032-3	100A-12
0713032-4	100 -13
0713032-4	100A-11
0713035	68 -33
0713035	68D-10
0713035	68E- 6A
0713035	68E- 7
0713036-2	125 - 6
0713038	68 -42
0713046	53 - 6
0713047	2 -10
0713047	2A- 8
0713047	2B-19
0713047	2C-17
0713049-10	56 - 8
0713049-2	55 -11
0713049-7	55 -12
0713049-7	56 - 9
0713052-1	28 -52
0713053-5	28 -27
0713053-6	28 -27
0713063	90 -35
0713065	70 -21
0713070-11	90 -34
0713070-12	90 -25A
0713070-15	90 -22
0713070-16	90 -39
0713070-19	90 -33A
0713070-20	28 -23
0713070-23	90 -17
0713070-24	90 -41
0713070-25	90 -25
0713070-28	90 -39
0713070-31	90 -39
0713070-32	90 -24
0713070-33	90 -17
0713070-4	90 -16A
0713070-5	90 -16B
0713070-6	90 -26
0713070-9	90 -31

PART NUMBER	FIGURE AND INDEX NO.
0713074-1	59 - 1
0713074-1	59A- 1
0713074-1	60 - 1
0713074-1	61 - 1
0713074-1	61A- 1
0713074-1	62 - 2
0713074-1	63 - 1
0713074-1	63C- 1
0713080-1	98 -51
0713081-1	98 -47
0713082-1	98 -54
0713084-2	98 -52
0713085-1	98 -53
0713086-1	98 -79
0713086-1	99A- 6
0713086-2	98 -80
0713086-2	99A- 7
0713087-1	98 -78
0713087-1	99A-31
0713088-3	98 -66
0713088-3	99A-19
0713092-1	98 -67
0713092-1	99A-20
0713093-2 ¤	55 -21
0713093-2 ¤	98 -77
0713093-2-243	55 -21
0713093-2-243	56 -20
0713093-2-243	98 -77
0713096-1	98 -45
0713096-2	98 -45
0713099-1	67 -75
0713099-1	67 -77
0713099-1	68 -75
0713099-1	68 -77
0713100-10	31 - 1
0713100-11	31 - 1
0713100-13	31 - 9
0713100-15	31 - 4
0713100-16	29 -28
0713100-25	28 -47
0713100-25	29 -34
0713100-3	29 -39
0713100-30	29 -28
0713100-4	29 -39
0713100-5	29 -29
0713100-9	29 - 5
0713105-1	28 -11
0713105-1	29 - 3
0713105-2	28 -12
0713105-2	29 - 3
0713106-1	31 -10
0713106-2	31 -10
0713107-1	28 -46
0713107-1	31 -12
0713115-1	29 -26
0713115-3	28 -25
0713116-1	29 -27
0713116-3	28 -26
0713118-200	31 - 5
0713119-1	22 -25
0713119-1	23 -28
0713119-1	28 -53
0713121-1	28 - 6
0713123-1	125 - 7
0713124-1	3 -23
0713125-6	126 -46
0713125-8	68 - 1
0713125-9	126 -46
0713126-1	67 - 2
0713126-1	68 - 2
0713127-1	67 - 7
0713127-1	68 - 9
0713127-1	68A- 7
0713127-1	68B- 6

PART NUMBER	FIGURE AND INDEX NO.
0713127-1	68C- 9
0713128-1	68A-49
0713128-1	68B-51
0713128-1	68C-54
0713128-1	87 -20
0713128-3	87 -20
0713129-4	68 -13
0713129-4	68D- 3
0713130-1	121 -29
0713131-1	68 -73
0713133-3	89 -18
0713135-2	28 -42
0713135-2	29 -38
0713135-2	88 -16
0713135-2	88A- 1
0713139-1	28 -42
0713139-1	29 -38
0713139-1	88 -18
0713139-1	88A- 3
0713140-1	28 -42
0713140-1	29 -38
0713140-1	88 -17
0713140-1	88A- 2
0713142-1	28 -17
0713143-1	28 -15
0713143-2	28 -16
0713144-1	28 -20
0713144-2	28 -20
0713145-1	28 -13
0713145-2	28 -13
0713147-1	33 -10
0713148-1	87 - 4
0713148-1	87 - 4A
0713149-1	33 - 9
0713149-1	33 -15
0713151-5	28 -37
0713152-1	30 -81
0713153-1	30 -82
0713155-2	53 -20
0713155-3	53 -21
0713156-1	126 -44
0713156-1	127 -45
0713156-1	128 -42
0713157-1	68 -86
0713158-1	103 -46
0713158-8	104 -31
0713158-9	105 -29
0713159-1	68 - 5
0713161-1	28 -14
0713163-1	68 -72
0713163-1	101 - 1
0713164-1 #	89 -29
0713164-2 #	89 -30
0713164-4	89 -30
0713165-1	24 -80
0713168-1	28 -50
0713170-1	126 -35
0713170-2	126 -36
0713171-1	67 -39
0713172-1	30 -99D
0713173-1	126 -53
0713173-2	126 -53
0713173-5	126 -55
0713173-6	126 -55
0713174-1	126 -48
0713174-3	28 -54
0713175-1	126 -48
0713176-1	2 -24
0713180-1	16 - 6
0713181-1	16 - 7
0713182-1	28 -51
0713185-1	28 - 8
0713185-1	29 - 2
0713185-1	68 - 1

PART NUMBER	FIGURE AND INDEX NO.
0713185-1 #	67 - 1
0713185-3	126 -46
0713187-3-418	67 - 9
0713188-1-418	68 -12
0713188-3	68 -11
0713189-1	67 -86
0713190-1	2 -38
0713190-2	2 -39
0713191-1	70B- 1
0713192-1	67 -32
0713192-2	67 -29
0713192-3	68 -90
0713194-1	70B- 5
0713194-2	70B- 5
0713198-2	28 -55
0713199-1	28 -56
0713207-1	2A- 1
0713207-1	58 - 5
0713208-1	67 -24
0713208-1	67 -87
0713208-1	68 -87
0713209-1	67 -24
0713210-11	2A- 5
0713210-11	69 -17
0713210-16	2 - 8
0713210-16	69 -17
0713210-4	2A- 3
0713210-4	123A- 8
0713217-2	94 -25
0713222-1	2 -23
0713222-1	67 -38
0713222-1	113 - 9
0713224-1	2 - 5
0713224-1	2A- 2A
0713224-1	57 -22
0713226-1	126 - 2
0713226-2	126 - 1
0713227-2	70 -22
0713228-2	2 - 4
0713229-1	129 - 7
0713230-1	129 -30
0713233-1	2A- 1
0713234-1	118A- 4
0713234-2	118A- 3
0713236-1	28 -10
0713236-2	28 -10
0713237-3	70 -22
0713238-2	126 -42
0713239-3	126 -44
0713239-6	126 -44
0713241-1	28 -22
0713244-1	101 -35
0713244-1	102 -31
0713246-1	89 -19A
0713247-200	123 -45
0713248-1	31 -10
0713248-2	31 -10
0713249-1	68A- 7A
0713249-1	68B- 7
0713249-1	68C-10
0713249-2	68A- 7B
0713249-2	68B- 8
0713249-2	68C-11
0713250-1	88A-38
0713254-4	69A-10
0713255-5	2A-23E
0713255-8	2 -34E
0713257-1 ¤	55 -21
0713257-1 ¤	98 -77
0713257-1 ¤	99A-30
0713295-1	89 - 8A
0713303-11	135 -17
0713303-2	67 -33
0713303-2	67 -34

PART NUMBER		FIGURE AND INDEX NO.
0713303-2		67 -35
0713303-2		67 -36
0713303-2		67 -39
0713303-2		68 -33
0713303-2		68 -34
0713303-2		68 -35
0713303-2		68 -36
0713303-2		68 -38
0713303-2		68D- 9
0713303-2		68D-10
0713303-2		88 -36
0713303-2		88A-18
0713303-2		89 -28
0713303-2		101 -31
0713303-2		102 -28
0713303-2		124 -10
0713303-5		67 -33
0713303-7		69 -13
0713303-7		69 -29
0713303-9		135 -16
0713307-1		87 - 4
0713307-1		87 - 8
0713307-2		87 - 4A
0713307-2		87 - 9
0713308-1		68 -63
0713313-1		92 -38
0713313-2		92 -39
0713316-1		106 -19
0713316-2		106 -22
0713321-1		28 -10
0713322-1		89 -15
0713322-6		89 -20A
0713331-1		31 - 4
0713332-1		31 - 4
0713495-10		30 -76
0713495-11		30 -77
0713495-12		30 -77
0713495-13		30 -63
0713495-14		30 -63
0713495-15		30 -74
0713495-16		30 -74
0713495-17		30 -90
0713495-18		30 -51
0713495-21		30 -49
0713495-22		30 -48
0713495-5		30 -45
0713495-5		30 -47
0713495-53		30 -35
0713495-53		30 -79
0713495-54		30 -36
0713495-54		30 -80
0713495-55		30 -89
0713495-57		30 -44
0713495-58		30 -47
0713495-6		30 -53
0713495-61		30 -43
0713495-62		30 -47
0713495-63		30 -42
0713495-64		30 -47
0713495-7		30 -50
0713495-8		30 -50
0713495-9		30 -76
0713496-3		30 -21
0713496-4		30 -32
0713497-3		30 -41
0713501-4		67 - 4
0713501-4		68 - 6
0713501-5		67 - 5
0713501-5		68 - 7
0713503-16		69 -28
0713503-25		69 -18
0713503-7		69 -27
0713504-2		68 -50
0713504-3		67 -51

PART NUMBER		FIGURE AND INDEX NO.
0713504-3		68 -50
0713505-1		89 -18
0713506-1		28 - 9
0713506-1		29 -35
0713506-2		28 -10
0713506-2		29 -36
0713511-1		122 - 2
0713514-1		69 - 1
0713514-13-279		69 - 8
0713514-16-418		69 - 8
0713514-19-279		69 - 8
0713514-6-418		69 - 8
0713515-1		69 -11
0713516-1		69 -12
0713517-1		69 - 5
0713518-10		68 -11
0713518-12-279		68 -12
0713518-18-418		67 -10
0713518-20-418		68 -12
0713518-8-279		68 -12
0713520-1		57 - 8
0713520-2		57 - 9
0713521-6-279		69 -24
0713521-7-279		69 -24
0713521-7-418		69 -24
0713522-1-279		68 -64
0713522-1-418		67 -64
0713522-1-418		68 -64
0713531-1		98 -74
0713531-1		99A-27
0713537-1		98 -69
0713537-1		99A-22
0713624-2		28 -21A
0713624-2		28 -22A
0713624-2		92 -14A
0713701-2		87 -15
0713705-4		2 -26
0713705-4		2A- 6
0713711-1		125A- 4
0713721-1		67 -92
0713721-1		68 -96
0713724-1		2 -27
0713724-1		69 -16
0713738-3		68A-26
0713738-3		69 -33
0713751-1		68D-10
0713755-1		28 - 8
0713755-1		68A- 1
0713755-10		68A- 6
0713755-10		68B- 5
0713755-10		68C- 5
0713755-11		68A- 6
0713755-11		68B- 5
0713755-11		68C- 6
0713755-12		68A- 8
0713755-15		68A- 8
0713755-15		68B- 9
0713755-4		68A- 7
0713755-4		68B- 6
0713755-4		68C- 9
0713755-7		68A- 2
0713755-7		68B- 2
0713755-7		68C- 2
0713755-8		68A- 3
0713755-8		68B- 3
0713755-8		68C- 3
0713755-9		68A- 4
0713755-9		68B- 4
0713755-9		68C- 4
0713756-1	¤	68A-22
0713756-7	¤	68A-23
0713756-8	¤	68A-23
0713758-12		69A- 1
0713758-4	¤	69A- 6

PART NUMBER		FIGURE AND INDEX NO.
0713758-8		69A- 9
0713761-1		89 -18
0713761-1		90 -25A
0713762-1		68A-42
0713762-1		68B-43
0713762-1		68C-48A
0713764-12	¤	68A-20
0713764-12	¤	68B-20
0713764-13	¤	68A-13
0713764-14	¤	68A-20
0713764-14	¤	68B-20
0713764-16	¤	68B-14
0713764-22	¤	68B-20
0713764-23	¤	68B-20
0713764-8		68A-13
0713765-1	¤	68A-19
0713766-10		28 -37A
0713766-3		28 -37
0713766-4		31 - 9
0713766-5		28 -44
0713766-6		28 -45
0713766-7		28 -39
0713766-8		28 -40
0713767-1		28 -19
0713767-2		28 -18
0713824-1		100 - 9
0713824-3		100A- 5
0713825-1		28 -35A
0713825-3		100A-15
0713826-1		87 -32
0713827-1		100 -10
0713827-1		100A- 7
0713837-1		117B-54
0713849-1		98 -55
0713849-1		99A- 8
0713851-1		98 -59
0713851-1		99A-17
0713851-12		98 -65
0713851-12		99A-16
0713851-5		98 -61
0713851-5		99A-12
0713851-8		98 -62
0713851-8		99A-13
0713851-9		98 -63
0713851-9		99A-14
0713868-4		98 -68
0713868-4		99A-21
0713871-1	¤	68A-19
0713871-1	¤	68B-19
0713871-1	¤	68C-21
0713872-1	¤	68A-22
0713872-3	¤	68A-23
0713872-4	¤	68A-23
0713872-9	¤	68B-22
0713875-1	¤	69A- 6
0713875-3	¤	69A- 6
0713878-2		126 -42
0713878-5		126 -42
0713878-9		126 -45A
0713887-1		68B-22
0713888-1		68B-22
0713889-1	¤	68B-22
0713906-1		92 -41
0713907-1	¤	92 -43
0713914-1		92 -25A
0713916-1		120B-77
0713916-1		120C-79
0713916-5		120C-79
0713942-1		27 - 6A
0713942-1		131 -72A
0713942-2		27 - 6B
0713942-2		131 -72B
0713945-11		70 -19D
0713947-1		22 -13

PART NUMBER		FIGURE AND INDEX NO.
0713953-1		89 - 8A
0713957-2		68B-22
0713957-2		68C-23
0713958-1	¤	68B-22A
0713958-5	¤	68C-24
0713959-4		90 -42
0713961-1		70A- 8
0713962-1		70A-13
0713962-2		70A-11
0713962-3		70A-14
0713962-4		70A-16
0713965-2		28 - 8
0713965-2		68C- 1
0713966-1	¤	68C-25
0713966-3	¤	68C-25
0713967-1		68C-12
0713968-1	¤	68C-17
0713968-2	¤	68C-22
0714010-1	¤	63C-21
0714010-2	¤	63C-21
0715001-1	¤	61 -14
0715001-1	¤	63 -12
0715015-10	¤	54 - 4
0715015-11	¤	57A-14
0715015-12	¤	57A-15
0715015-13	¤	57A-19
0715015-14	¤	57A-19
0715015-3	#	57A- 1
0715015-6	#	57A- 3
0715015-9	¤	54 - 3
0715018-1	#	64A- 1
0715018-10	#	64A-13
0715018-2	#	64A- 9
0715018-7	#	64A- 4
0715019-1		68B-67
0715020-1	¤	63 -21A
0715029-2		68C-66
0715037-1	#	53 - 9
0715037-10		53 -10
0715037-3		53 -17
0715037-4		53 -16
0715037-5		53 -15
0715037-6		53 -14
0715037-7		53 -13
0715037-8		53 -12
0715037-9		53 -11
0716101		24 -34A
0716101		25 -24
0716102		106 -28
0716104-1		107 -44
0716104-2		107 -52
0716104-3		73 -67
0716106-1		2 - 6
0716106-1		55 -16
0716106-1		56 -12
0716106-2		2 - 7
0716106-2		55 -16
0716106-2		56 -12
0716107-1		22 -13
0716108-1		103 -17
0716108-1		104 -15
0716108-1		105 -13
0716109-1		103 - 2
0716109-1		111 -
0716110-1		103 -46
0716110-1		104 -43
0716110-1		105 -41
0716111-1		104 - 2
0716111-1		105 - 2
0716112-1		2 -35
0716112-1		68 -99A
0716112-2		2 -36
0716113-1		2 - 6A
0716113-1		28-17

PART NUMBER		FIGURE AND INDEX NO.
0716113-2		2 - 7A
0716113-2		28-18
0716114-1	¤	105 -60
0716114-3	¤	105 -60
0716115-1		105 -59
0716115-2		105 -59
0716125-2	#	13 -12
0716127-1		13 -14
0716127-2	#	13 -14
0716128-28		67 -35
0716128-30		67 -23
0716128-45		24 -45
0716129-1		108 -26
0716130-1		108 -18
0716131-1		73 -67
0716131-1		73A-76
0716132-1		28-48
0716134-2		118A-18
0716134-3		118A-19
0716135-1		2 -35
0716135-1		28-27
0716169-1		104 -51A
0716169-1		105 -49A
0716606-1		104 -34
0716606-1		105 -32
0716606-6		104 -34A
0716606-6		105 -32A
0716612-2		103 -44
0716612-202		106 -20
0716612-204		105 -57
0716613-3		105 -55
0716613-4		105 -55
0716614-1		13 - 6A
0716614-3		13 - 6A
0716614-5		13 - 6A
0716623-2		105 -57A
0716623-2		106 -20A
0716624-1		105 -58C
0716624-1		106 -27A
0716632-1		104 -56
0716632-2		105 -65
0717000-1		52 - 1
0717000-13		52 - 1
0717000-15		52 - 1
0717000-4	¤	57 -21
0717000-5		52 - 1
0720001-10		11 -16
0720001-12		7 -16
0720001-42		7 - 1
0720001-43		7 - 1
0720001-44		11 - 9
0720001-45		11 - 1
0720001-51		7 -15
0720001-52		7 -25
0720001-54		7 -15
0720001-55		7 -25
0720001-66		11 - 9
0720001-67		11 -10
0720001-67		12 -13
0720001-68		11 -10
0720001-68		12 -13
0720001-69		11 - 3
0720002-11		3 -14
0720002-12		3 -14
0720004		127 -43
0720005-1		4 -38
0720005-1		5 -39
0720005-1		6 -39
0720005-1		6A-38
0720007-1		13 - 7
0720007-2		13 - 8
0720007-7		13 - 7
0720007-8		13 - 8
0720016-1		3A-45

PART NUMBER	FIGURE AND INDEX NO.
0720016-2	3A-45
0720601-15	7 -26
0720601-16	7 -26
0720601-17	11 - 2
0720601-18	11 -17
0720601-20	11 - 4
0720601-205	7 -17
0720601-21	12A- 9
0720601-24	11 -11
0720601-98	12A-10
0720601-99	12A-10
0720602-1	8 - 4
0720606-10	6A-34
0720606-3	6A-33
0720606-5	6A-33
0720606-8	6A-34
0720607-1	5 -23
0720607-1	6 -23
0720607-2	5 -24
0720607-2	6 -24
0720607-3	8 - 5
0720607-4	8 - 6
0720608-1	4 -23
0720608-15	5 -25A
0720608-15	6 -25A
0720608-2	7 -28
0720608-23	5 -25
0720608-23	6 -25
0720608-3	8 - 7
0720608-7	5 -25A
0720608-7	6 -25A
0720609-1	8 - 8
0720610-1	8 -15
0720610-2	8 -16
0720612-1	12A- 7
0720612-2	12A- 4
0720617-5	6A- 7
0720618-10	3A-40
0720618-9	3A-40
0721100-23	4 - 5
0721100-23	5 - 8
0721100-23	6 - 8
0721100-24	4 - 5
0721100-24	5 - 8
0721100-24	6 - 8
0721100-25	4 - 6
0721100-25	5 - 9
0721100-25	6 - 9
0721100-26	4 - 6
0721100-26	5 - 9
0721100-26	6 - 9
0721100-5	4 -11
0721100-5	5 -12
0721100-5	6 -12
0721100-6	4 -10
0721100-6	4 -14
0721100-6	5 -12
0721100-6	5 -16
0721100-6	6 -12
0721100-6	6 -17
0721100-6	6A- 5
0721100-6	6A-13
0721100-7	4 - 9
0721100-7	4 -13
0721100-7	5 -12
0721100-7	5 -15
0721100-7	6 -12
0721100-7	6 -16
0721100-7	6A- 6
0721100-7	6A-12
0721105-13	101 -25
0721105-13	102 -22
0721105-14	101 -23
0721105-14	102 -20

PART NUMBER	FIGURE AND INDEX NO.
0721105-15	101 -23
0721105-15	102 -20
0721105-3	101 -27
0721105-3	102 -24
0721105-38	101 -25
0721105-38	102 -22
0721105-39	101 -23
0721105-39	102 -20
0721105-4	101 -28
0721105-4	102 -25
0721105-40	101 -23
0721105-40	102 -20
0721105-5	101 -30
0721105-5	102 -27
0721105-8	101 -29
0721105-8	102 -26
0721107-1	4 -39
0721107-1	5 -42
0721107-1	6 -42
0721107-1	6A-23
0721107-2	4 -39
0721107-2	5 -42
0721107-2	6 -42
0721107-2	6A-23
0721111-1	4 -11
0721111-1	5 -13
0721111-15	5 -14
0721111-16	4 -11
0721111-16	5 -13
0721111-21	4 -11
0721111-21	5 -13
0721111-21	6A- 8
0721111-23	6A-10
0721111-24	6A-10
0721111-25	6A- 8
0721111-3	4 -41
0721111-3	5 -41
0721111-3	6 -41
0721111-3	6A-42
0721111-33	6A-42
0721111-4	4 -41
0721111-4	5 -41
0721111-4	6 -41
0721111-5	4 -40
0721111-7	4 -12
0721111-7	5 -14
0721111-8	4 -12
0721112-1	4 -35
0721112-1	6 -37
0721112-2	4 -35
0721112-2	6 -37
0721112-3	4 -34
0721112-3	6 -36
0721112-4	4 -34
0721112-4	6 -36
0721114-1	101 -22
0721114-1	102 -19
0721114-3	8A-24
0721114-3	101 -22
0721114-3	102 -19
0721115-1	8A-25
0721115-1	101 -21
0721115-1	102 -18
0721116-1	4 - 8
0721116-1	5 -11
0721116-1	6 -11
0721116-2	4 - 8
0721116-2	5 -11
0721116-2	6 -11
0721117-1	5 -37
0721117-1	6A-34
0721117-2	5 -37
0721117-3	5 -36
0721117-3	6A-33

PART NUMBER	FIGURE AND INDEX NO.
0721117-4	5 -36
0721118-1	13 -12
0721201-1	11 -23
0721201-2	11 -23
0721201-51	11 -22
0721201-67	11 -22
0721203-1	70B- 9
0721203-2	70B- 9
0721205-1	2 -46
0721205-1	2A-29
0721205-1	2B-22
0721205-1	2C-22
0721205-1	70B-13
0721207-1	70B- 9
0721207-2	70B- 9
0721306-1	13 -35
0721400-10	9 - 3
0721400-13	9 - 7
0721400-13	10 - 8
0721400-13	10A- 8
0721400-14	9 - 7
0721400-14	10 - 8
0721400-14	10A- 8
0721400-17	9 - 8
0721400-17	10 - 9
0721400-17	10A- 9
0721400-18	9 - 8
0721400-18	10 - 9
0721400-18	10A- 9
0721400-19	9 -15
0721400-20	9 -15
0721400-21	9 -
0721400-22	9 -
0721400-23	9 -16
0721400-24	9 -16
0721400-27	9 -16
0721400-28	9 -16
0721400-3	9 - 1
0721400-3	10 - 1
0721400-3	10A- 1
0721400-31	10 -19
0721400-31	10A-20
0721400-32	10 - 3
0721400-32	10A- 3
0721400-33	10 -18
0721400-33	10A-19
0721400-34	10 - 3
0721400-35	9 - 4
0721400-35	10 - 5
0721400-35	10A- 5
0721400-4	9 - 1
0721400-4	10 - 1
0721400-4	10A- 1
0721400-9	9 - 4
0721400-9	10 - 5
0721401-1	10 -
0721401-11	10A-
0721401-12	10A-
0721401-13	10 -10A
0721401-13	10A-12
0721401-14	10 -10A
0721401-14	10A-12
0721401-15	10A-17
0721401-16	10A-17
0721401-17	10 -
0721401-18	10 -
0721401-19	10 -
0721401-2	10 -
0721401-20	10 -
0721401-3	10 -
0721401-4	10 -
0721401-5	10 -17
0721401-5	10A-18
0721401-6	10 -17

PART NUMBER	FIGURE AND INDEX NO.
0721401-6	10A-18
0721401-7	10 -16
0721401-8	10 -16
0721402-1	10 -11
0721402-1	10A-11
0721402-2	10 -11
0721402-2	10A-11
0721402-3	10 -10
0721402-3	10A-10
0721402-4	10 -10
0721402-4	10A-10
0722012-1	5 -40
0722012-11	6A-39
0722012-16	6A-39
0722014-1	12 -17
0722014-1	12A-14
0722014-2	12 -17
0722014-21	12A-14
0722015-32	12 -19
0722015-33	12 -19
0722015-60	12A-16
0722015-61	12A-16
0722017-1	6A- 3
0722017-2	6A- 3
0722100-1	7 -18
0722100-1	8 -10
0722100-3	3 -27
0722100-4	3 -26
0722180-23	8A-26
0722180-24	8A-27
0722180-29	8A-
0722180-30	8A-
0722180-30	8A- 2
0722180-31	8A-
0722180-32	8A-
0722180-37	8A- 1
0722180-39	8A- 1
0722180-40	8A- 2
0722180-49	8A-26
0722180-50	8A-27
0722180-51	8A-25
0722180-52	8A-25
0722180-7	8A-25
0722180-8	8A-25
0722182-13	12A- 1
0722182-14	12A- 5
0722182-15	12A- 5
0722182-16	12A- 1
0722182-17	12A- 5
0722182-19	12A-11
0722182-20	6A-
0722182-21	6A-
0722182-22	6A-
0722182-23	6A-
0722182-25	12A-12
0722183-1	8A- 3
0722183-2	8A- 3
0722184-2	8A-11
0722184-3	6A-46
0722185-1	8A-14
0722185-2	8A-15
0722185-2	8A-18
0722185-5	8A-12
0722185-6	8A-16
0722186-1	8A-19
0722186-1	8A-22
0722186-3	8A-20
0722187-1	6A-43
0722187-2	6A-43
0722187-7	6A-43
0722187-8	6A-43
0722188-1	8A-29
0722188-2	8A-30
0722189-1	8A-31

PART NUMBER	FIGURE AND INDEX NO.
0722189-2	8A-32
0722190-1	8A-33
0722190-2	8A-34
0722191-1	8A-35
0722191-2	8A-36
0722192-1	8A-37
0722192-2	8A-38
0722193-1	8A-39
0722193-2	8A-40
0722194-1	5 -18
0722194-1	6 -18
0722194-1	6A-15
0722194-2	5 -18
0722194-2	6 -18
0722194-2	6A-15
0722195-1	6A-16
0722196-2	6A-18
0722197-1	6A-19
0722197-2	6A-19
0722197-3	5 -22
0722197-3	6 -22
0722197-4	5 -22
0722197-4	6 -22
0722198-1	5 -23
0722198-1	6 -23
0722198-1	6A-20
0722199-1	5 -24
0722199-1	6 -24
0722199-1	6A-21
0722200-1	6A-22
0722200-2	6A-22
0722201-1	4 -15
0722201-1	5 -17
0722201-1	6A-14
0722203-1	8A- 8
0723200-10	3A-35
0723200-11	3A-35
0723200-12	3A-35
0723200-5	3A-35
0723200-6	3A-35
0723200-9	3A-35
0723201-1	3A-32
0723201-2	3A-32
0723201-3	3A-32
0723201-4	3A-32
0723600-17	16 - 1
0723600-18	16 - 1
0723600-6	16 -10
0723600-7	16 - 1
0723600-8	16 - 1
0723601-2	16 -13
0723604-1	16 -11
0723605-1-791	16 -17
0723605-2-791	16 -17
0723605-3-791	16 -16
0723605-4-791	16 -16
0723605-6	3A-14
0723605-7	3A-15
0723605-8	3A-14
0723605-9	3A-15
0723615-200-791	5 -44
0723615-200-791	6 -44
0724108-1	6A-19
0724115-1	14 -22
0724115-1	14 -22
0724115-2	14 -22
0724115-3	14 -22
0724115-4	14 -22
0726001-15	13 - 1
0726001-16	13 - 1
0726001-3	13 - 3
0726001-7	13 -30
0726002-1	13 -27
0726002-1	13 -27

PART NUMBER	FIGURE AND INDEX NO.
0726110-1	13 -28
073100-83	18 -
0731000-1	17 -18
0731000-11	18 -19
0731000-12	18 -32
0731000-13	20 -44
0731000-14	20 -46
0731000-15	18 -31
0731000-16	18 -29
0731000-17	18 -35
0731000-18	18 -36
0731000-19	20 -37
0731000-2	17 -19
0731000-2	18 -23
0731000-200-791	18 -39
0731000-21	18 -37
0731000-22	18 -33
0731000-23	18 -30
0731000-24	18 -39
0731000-25	18 -34
0731000-27	20 -27
0731000-3	17 -20
0731000-3	18 -24
0731000-30	20 -38
0731000-31	20 -11
0731000-32	18 - 9
0731000-33	17 -14
0731000-33	18 -11
0731000-34	18 -10
0731000-35	20 -47
0731000-36	20 -29
0731000-37	17 -17
0731000-37	18 -20
0731000-38	18 -18
0731000-39	20 -42
0731000-4	17 -21
0731000-4	18 -25
0731000-40	20 -
0731000-41	18 -
0731000-43	18 -12
0731000-45	20 -40
0731000-49	20 -24
0731000-5	17 -22
0731000-5	18 -26
0731000-50	20 -25
0731000-51	17 -40
0731000-52	20 -45
0731000-53	20 -43
0731000-6	20 -21
0731000-60	18 -21
0731000-7	20 -22
0731000-8	20 -23
0731000-87	18 - 9
0731000-9	20 -35
0731001-10	17 -
0731001-14 *	17 - 8
0731001-2	17 -34
0731001-200 *	17 -
0731001-201	17 -
0731001-3	17 -35
0731001-4	17 -35
0731001-5	17 -36
0731001-6	17 -37
0731001-7	17 - 8
0731001-8	17 -15
0731001-9	17 -38
0731002-1	17 -32
0731003-1	17 -27
0731004-1	17 -28
0731005-1	17 -29
0731006-1	17 -31
0731007-1	17 -26
0731008-1	17 -30
0731009-1	17 -33

PART NUMBER	FIGURE AND INDEX NO.
0731010-1	17 -24
0731012-1	17 -16
0731013-1	17 -15
0731015-1	17 -42
0731015-1	124 - 9
0731018-1	17 -25
0731019-1-791	18 -44
0731019-1-791	124A-10
0731019-2-791	17 -42
0731019-2-791	124A-10
0731021-1	17 -23
0731022-2	18 -27
0731022-4	18 -28
0731024-3	18 -
0731024-5	17 -18
0731024-5	18 -21
0731100-11	20 -10
0731100-11	20 -15
0731100-12	20 - 9
0731100-12	20 -13
0731100-13	17 -10
0731100-13	18 -14
0731100-14	17 - 9
0731100-14	18 -13
0731100-5	20 - 5
0731100-5	20 - 7
0731100-6	20 - 8
0731100-6	20 -14
0731100-7	17 -13
0731100-7	18 -17
0731100-9	17 -12
0731100-9	18 -16
0731607-1	124A- 9
0731608-1	70A-22
0731608-2	70A-22
0732100-10	21 -11
0732100-11	21 -10
0732100-3	21 -12
0732100-4	21 - 9
0732100-6	19 -27
0732100-7	19 -28
0732100-8	19 -29
0732101-10	19 -39
0732101-11	19 -39
0732101-4	19 -26
0732101-5	19 -15
0732101-6	19 -14
0732101-7	19 -43
0732102-3	19 -55
0732102-4	19 -56
0732102-5	19 -61
0732102-6	19 -62
0732102-7	19 -58
0732102-8	19 -59
0732103-1	19 -22
0732103-2	19 -22
0732106	19 -37
0732106-1	19 -37
0732600-2	19 -32
0732600-3	19 -34
0732600-4	19 -
0732600-5	19 -30
0732600-6	19 -31
0732600-7	19 -33
0732602-1	19 -22
0732602-2	19 -23
0732603-1	19 -25
0732604-1	19 -24
0732605-2	19 - 4
0732606-3	19 - 6
0732607-1	19 - 5
0732608-1	19 -16
0732609-1	19 - 8
0732610-1	19 -21

PART NUMBER	FIGURE AND INDEX NO.
0732610-2	19 -20
0732610-3	19 -19
0732610-4	19 -18
0732610-5	19 -17
0732611-1	19 - 9
0732611-2	19 -10
0732611-3	19 -11
0732611-4	19 -12
0732611-6	19 -13
0732613-1-791	19 -36
0732613-3-791	19 -36
0732616-1	19 -44
0732621-1	19 -44
0733100	20 -11
0733100	20 -12
0733101-1	20 -31
0733101-3	21 -14
0733102-3	20 -20
0733102-5	20 -16
0733103	20 -19
0733105-2	20 -36
0733106-1	20 -28
0733107-1	20 -26
0733108-1	20 -30
0733110-1	20 -
0733110-2	20 - 6
0733110-3	20 -39
0733110-4	20 -34
0733110-5	20 -41
0733110-6	20 -34
0733111-1	20 -47A
0733115-1	20 -16
0734110-1	21 - 7
0734110-2	21 - 8
0734600-1	21 -
0734600-19	21 -
0734600-21	21 -
0734600-23	21 -
0734600-3	21 -28
0734600-32	21 -
0734600-33	21 -
0734600-4	21 -23
0734600-5	21 -22
0734600-7	21 -25
0734600-8	21 -27
0734600-9	21 -24
0734601-1	21 - 4
0734601-2	21 - 5
0734601-3	21 - 6
0734601-4	21 - 5
0734601-5	21 - 4
0734602-1	21 -17
0734602-2	21 -20
0734602-3	21 -19
0734602-4	21 -18
0734602-9	21 -18
0734604-1	21 -13
0734605-1	21 -21
0734606-1	21 -29
0734608-1	21 -26
0734609-1	21 -26
0734610-2	21 -14
0734611-1	21 -29A
0741000-7	40 -13
0741000-7	40A-13
0741000-7	41 -13
0741001-3	41 - 8
0741001-4	41 - 8
0741001-5	40 - 8
0741001-5	40A- 8
0741001-5	41 - 8
0741001-6	40 - 8
0741001-6	40A- 8
0741001-6	41 - 8

PART NUMBER	FIGURE AND INDEX NO.
0741001-7	40 - 8
0741001-7	40A- 8
0741001-8	40 - 8
0741001-8	40A- 8
0741004	41 -43
0741007-1	40 - 6
0741007-1	41 - 6
0741007-1	127 -58
0741007-1	128 -53
0741008-1	40 -34
0741008-1	41 -31
0741008-2	40 -35
0741008-2	41 -32
0741008-3	40 -37
0741008-3	41 -34
0741008-4	40 -36
0741008-4	41 -33
0741008-5	40 -27
0741008-5	41 -24
0741022-1	40 - 6
0741022-1	40A- 6
0741022-1	41 - 6
0741022-2	40 - 6
0741026-3	42 - 1
0741027-2	42 -21
0741027-200	42C-20
0741027-201	42C-20
0741048-8	40 -38
0741048-8	40A-43
0741061-1	70A- 2
0741061-2	70A- 2
0741061-3	70A- 3
0741061-4	70A- 3
0741061-5	70A- 4
0741061-6	70A- 4
0741103	40 -28
0741103	41 -25
0741105-1	40A-21
0741636-2	40A-16
0741636-3	40A-16
0741637-1	40A-17
0741637-2	40A-18
0742002-2	32A-42
0742002-4	32A-45
0742002-5	126A-11
0742002-6	126A-12
0742003-2	126A-14
0742005-1	126A- 9
0742006-1	126A- 6
0742006-2	126A- 7
0742007-1	87 -12
0742100-11	45 - 8
0742100-15	45 - 8
0742100-15	46 - 8
0742100-15	46A- 8
0742100-15	46B- 8
0742100-18	45 - 8
0742100-19	45 - 8
0742100-20	45 - 8
0742100-20	46 - 8
0742100-20	46A- 8
0742100-20	46B- 8
0742100-5	45 - 1
0742100-5	46 - 1
0742100-5	46A- 1
0742100-5	46B- 1
0742100-6	45 - 5
0742100-6	46 - 5
0742100-6	46A- 5
0742100-6	46B- 5
0742100-8	45 - 9
0742100-8	46 - 9
0742100-8	46A- 9
0742100-8	46B- 9

PART NUMBER	FIGURE AND INDEX NO.
0742100-9	45 - 8
0742101-3	46B-15
0742101-3	48B-
0742101-4	45 -15
0742101-4	48B-
0742102	45 -11
0742102	46 -11
0742102	46A-11
0742102	46B-11
0742108-1	127 -63
0742109-1	127 -62
0742110-19	127 -35
0742110-19	128 -33
0742110-20	127 -36
0742110-20	128 -34
0742110-5	127 -43
0742110-6	127 -43
0742110-7	126 -17
0742110-7	127 -21
0742110-7	128 -19
0742111-1	24 -43
0742111-1	126 -11
0742111-2	24 -43
0742112	45 - 4
0742112	46 - 4
0742112	46A- 4
0742112	46B- 4
0742115-11	126 -51
0742115-12	126 -50
0742115-15	127 -56
0742115-15	128 - 2
0742115-16	127 -18
0742115-16	128 -16
0742115-17	127 -55
0742115-17	128 -51
0742115-18	127 -55
0742115-18	128 -51
0742115-19	127 -18
0742115-19	128 -16
0742115-20	127 -19
0742115-20	128 -17
0742115-21	126 -32
0742115-21	127 -27
0742115-21	128 -25
0742115-22	126 -32A
0742115-22	127 -28
0742115-22	128 -26
0742115-25	30 -52
0742115-26	30 -52
0742115-28	126 -18
0742115-28	127 -22
0742115-28	128 -20
0742115-31	126 -49
0742115-37	127 -51
0742115-37	128 -47
0742115-4	127 -34
0742115-4	128 -32
0742115-44	127 -47
0742115-44	128 -44
0742115-45	127 -47
0742115-45	128 -44
0742115-5	126 -25
0742115-5	127 -30
0742115-5	128 -28
0742115-50	127 -17
0742115-50	128 -15
0742115-51	127 -17
0742115-51	128 -15
0742115-6	126 -26
0742115-6	127 -31
0742115-6	128 -29
0742115-7	126 -33
0742115-7	127 -32
0742115-7	128 -30

PART NUMBER	FIGURE AND INDEX NO.
0742116-2	127 -41
0742116-2	128 -39
0742116-3	127 -41
0742116-3	128 -39
0742117-2	127 -54
0742117-2	128 -50
0742117-3	127 -54
0742117-3	128 -50
0742117-4	127 -53
0742117-4	128 -49
0742117-5	127 -53
0742117-5	128 -49
0742119-1	127 -48
0742119-1	128 -45
0742120-1	126 -12
0742120-2	126 -12
0742122-4	45 -15
0742122-4	46 -15
0742122-4	46A-15
0742122-4	47 -
0742122-5	46A-15
0742122-5	46B-15
0742122-5	47 -
0742123-2	126 -38
0742124-1	126 -65
0742124-2	126 -57
0742124-3	126 -57
0742125-5	46 -20
0742125-5	46A-50
0742126-1	46 -24
0742126-1	46A-54
0742127-1	46 -25
0742127-1	46A-55
0742128-1	46 -26
0742128-1	46A-56
0742129-1	46 -27
0742129-1	46A-57
0742130-1	35B-32
0742130-1	46 -30
0742130-1	46A-60
0742131-1	46 -32
0742132-1	46 -44
0742134-1	46 -45
0742136-1	46A-42
0742136-1	46B-61
0742137-1	46A-37
0742137-4	46A-27
0742138-1	46A-26
0742138-3	46A-36
0742139-1	46A-39
0742139-4	46A-39
0742141-1	40A-32
0742141-2	40A-32
0742141-3	40A-25
0742141-4	40A-23
0742141-5	40A-27
0742141-6	40A-33
0742141-8	40A-35
0742143-1	40A-22
0742144-1	42C-27
0742144-2	42C-27
0742145-1	45 -17
0742145-1	46A-16A
0742145-1	46B-16
0742146-1	45 -11
0742146-1	46B-11
0742147-3	45 - 9
0742147-3	46B- 9
0742147-5	45 -15
0742147-5	48B-
0742147-6	46B-15
0742147-6	48B-
0742200-5	45 - 7
0742200-5	46A- 7

PART NUMBER	FIGURE AND INDEX NO.
0742200-5	46B- 7
0742200-5	99 -36
0742200-6	45 -10
0742200-6	46 -10
0742200-6	46A-10
0742200-6	46A-43
0742200-6	46B-10
0742373	127 -50
0742373	128 -46
0742400	45 -15
0742400	48 -
0742400-10	48 -
0742400-10	48A-
0742400-11	48 -22
0742400-11	48A-22
0742400-13	45 -15
0742400-13	48A-
0742401	48 -20
0742401-1	48 -26
0742401-10	48 -27
0742401-11	48 -35
0742401-12	48 -37
0742401-13	48 -36
0742401-14	48 -40
0742401-3	48 -39
0742401-4	48 -28
0742401-5	48 -29
0742401-6	48 -31
0742401-7	48 -32
0742401-8	48 -33
0742401-9	48 -34
074415-2	113A-23
075-05400	42A-28
075-05401	42A-28
0750025-1	117D-17
0750027-1	121 -30
0750027-1	122 -31
0750028-2	114 -24
0750031-1	75 - 5
0750032-1	108 - 9
0750032-1	110 - 2
0750035-1	114 -21
0750036-1	116 - 3
0750036-1	117A- 3
0750037-1	116 -11
0750037-1	117A-11
0750038-1	73 -63
0750038-3	73 -63
0750038-3	73A-72
0750038-3	76A-19
0750038-3	77B-22
0750038-4	73 -63
0750038-4	73A-72
0750038-4	76A-18
0750038-4	77B-21
0750100-11	117 - 3
0750100-11	136 - 3
0750100-12	117 -11
0750100-12	136 - 9
0750101-61	79 -
0750103-1	116 - 2
0750103-1	117 - 2
0750103-1	117A- 2
0750103-1	136 - 2
0750104-1	136 - 1
0750104-2	136 - 1
0750104-3	136 - 1
0750111-19	77 -24
0750111-19	78 - 4
0750111-21	78 - 4A
0750113-1	77 -26
0750113-1	78 -11
0750117-21	84 -34
0750117-21	85 -21

PART NUMBER	FIGURE AND INDEX NO.
0750117-31	84 -54
0750117-31	85 -41
0750119	75 -29
0750121	76 -48
0750121	77 -43
0750125-1	118 - 1
0750125-10	118 -15
0750125-11	118 -14
0750125-2	118 - 2
0750125-3	118 - 3
0750125-4	118 - 6
0750125-5	118 - 9
0750125-6	118 -10
0750125-7	118 -11
0750125-8	118 -12
0750125-9	118 -13
0750126-4	77 -28
0750128-1	84 -27
0750128-100	85 -10
0750128-11	84 -40
0750128-11	85 -13
0750128-11	85 -27
0750128-13	84 -21
0750128-13	85 - 9
0750128-14	84 -41
0750128-14	85 -28
0750128-15	84 -42
0750128-15	85 -29
0750128-16	84 -33
0750128-16	85 -20
0750128-17	84 -28
0750128-17	85 -14
0750128-21	84 -32
0750128-21	85 -19
0750128-37	84 -15
0750128-37	85 - 3
0750128-38	84 -13
0750128-38	85 - 1
0750128-42	84 -16
0750128-42	85 - 4
0750128-44	85 -10
0750128-53	85 -23
0750128-55	84 -24
0750128-57	84 -18
0750128-58	84 -17
0750128-66	84 -36
0750128-93	84 -17
0750128-93	85 - 5
0750128-94	84 -18
0750128-94	85 - 6
0750128-97	84 -24
0750130-3	83 -10
0750130-31	83 -13
0750130-4	83 -11
0750130-42	83 - 7
0750130-44	83 - 2
0750130-46	83 - 3
0750130-48	83 - 9
0750130-5	83 -12
0750130-6	83 - 6
0750131-1	77 -20
0750131-1	78 - 2
0750131-1	78A- 2
0750132-1	76 - 2
0750132-1	77 - 3
0750132-2	77 - 4
0750133-21	77 -23
0750133-22	77 -30
0750133-7	77 -21
0750133-7	78 -16
0750133-8	77 -23
0750133-9	77 -22
0750135-1	84 -44
0750135-1	84 -47

PART NUMBER	FIGURE AND INDEX NO.
0750135-1	85 -31
0750135-1	85 -34
0750135-11	84 -52
0750135-11	85 -39
0750135-3	84 -50
0750135-3	85 -37
0750135-4	84 -51
0750135-4	85 -38
0750135-8	84 -51
0750137	76 - 4
0750137	77 - 2
0750138	74 -28
0750138	75 -22
0750139	74 -37
0750140-5	76A- 9
0750140-5	77B-10
0750140-5	121 - 3
0750140-5	122 - 4
0750140-6	76 -34
0750140-6	77 -44
0750141-1	76 -60
0750141-1	77 -45
0750142-1	77 -34
0750142-1	77B-18
0750144-1	77 -18
0750144-15	77 -18
0750144-16	77 -18
0750144-20	77 -31
0750144-21	77 -18
0750144-6	77 -31
0750146-1	73 -63
0750146-3	73 -63
0750146-4	73 -63
0750146-4	76A-19
0750146-4	77B-22
0750147-3	114 -37
0750147-5	114 -23
0750148-1	85 -49
0750148-2	85 -46
0750149-1	85 -51
0750149-2	85 -52
0750149-3	85 -53
0750149-4	85 -54
0750149-5	85 -55
0750150-1	77 -41
0750152-1	85 -45
0750152-2	76 -188
0750152-2	77 -50
0750152-2	84 - 1
0750152-3	77A- 4
0750153-10	113 -33
0750153-10	115 -10
0750153-3	113 -35
0750153-3	115 -12
0750153-8	113 -23
0750153-8	115 - 1
0750156-1	77 -27
0750158-1	77 -15
0750159-1	75 -42
0750160-1	77 -45
0750161-17	82 - 7
0750161-22	82 - 3
0750161-24	82 - 2
0750161-25	82 - 8
0750161-28	82 - 5
0750161-31	82 - 1
0750161-36	82 - 7
0750161-58	82 - 6
0750161-61	82 - 5
0750161-64	82 - 1
0750161-67	82 - 1
0750162-10	78 -
0750162-3	78 -14
0750162-4	78 -15

PART NUMBER	FIGURE AND INDEX NO.
0750162-6	78 -
0750162-7	78 -
0750162-9	78 -
0750163-4	78 - 7
0750164-5	78 - 8
0750166-4	74 -168
0750166-4	76 -43
0750167-1	78 -12
0750169-6	76 -39
0750171-1	78 -17
0750171-1	78 -21
0750171-1	78A- 8
0750171-4	76 -41
0750171-5	78 - 9
0750171-5	78A- 4
0750173-1	78 - 6
0750173-2	78 - 6
0750174-3	78 -19
0750175-1	76A-20
0750175-1	78 - 3
0750175-1	78A- 3
0750177-5	113 -30
0750177-6	113 -29
0750178-1	76 -27
0750179-5	76 -63
0750179-8	78 -20
0750180-1	78 -18
0750181-1	78 - 8A
0750181-1	78A- 7
0750182-4	78 - 7A
0750192-2	73 -37
0750192-3	73 -37
0750195-7	74 -81
0750202-1	74 -28
0750203-1	80 -
0750204-1	76 -61
0750205-1	126 -78
0750207-1	78 - 78
0750207-2	78 - 78
0750207-3	78 - 78
0750209-1	75 - 6A
0750211-1	77 -45
0750213-1	121 -38
0750213-1	122 -37
0750216-1	76A-12
0750216-1	77B-13
0750216-1	121 - 5A
0750216-1	122 - 6A
0750217-1	121 -34
0750217-1	122 -33
0750220-1	121 -40
0750220-1	122 -39
0750220-1	123B- 9
0750221-1	121 -39
0750221-1	122 -38
0750222-2	76 -61
0750223-1	75 -29
0750225-1	77 -67
0750225-2	77 -68
0750228-2	75 -29
0750230-1	74 -62
0750230-1	75 -45
0750232-1	104 -54
0750232-1	105 -64
0750233-1	75 -29
0750282-1	75 -43
0750283-1	76 -60
0750283-1	77 -45
0750341-1	74 -99B
0750607-4	77 -65
0750607-5	77 -65
0751001-13	77 - 8
0751001-25	127 -55
0751001-25	128 -51

PART NUMBER	FIGURE AND INDEX NO.
0751001-27	77 - 8
0751001-27	126 -73
0751003-30	76 - 9
0751003-31	76 - 9
0751003-31	126 -73
0751004-1	75 - 6
0751004-1	75 - 6
0751004-2	75 - 7
0751004-2	75 - 7
0751005-1	74 - 4
0751005-1	76 -12
0751005-2	74 - 4A
0751005-3	74 - 4
0751005-4	74 - 4A
0751006-2	76 -10
0752000-117	73 -11
0752000-117	73A-11
0752000-56	73 - 8
0752000-64	73 - 5
0752004-1	71 -12
0752004-2	71 -14
0752004-6	71 -11
0752004-7	71 -11
0752005-4	71 - 7
0752013-1	73 -45
0752013-1	73A-49
0752013-2	73 -45
0752013-2	73A-50
0752014-1	73 -49
0752014-1	73A-58
0752014-10	73 -58
0752014-10	73A-67
0752014-11	73 -52
0752014-11	73A-61
0752014-12	73 -59
0752014-12	73A-68
0752014-15	73 -53
0752014-15	73 -60
0752014-15	73A-62
0752014-15	73A-69
0752014-17	73 -50
0752014-17	73 -57
0752014-17	73A-59
0752014-17	73A-66
0752014-2	73 -56
0752014-2	73A-65
0752014-23	73 -49
0752014-24	73 -56
0752014-25	73 -52
0752014-26	73 -58
0752014-27	73 -59
0752014-28	73 -51
0752014-9	73 -51
0752014-9	73A-60
0752015-10	73 -17
0752015-10	73A-20
0752015-19	73 -19
0752015-19	73A-22
0752015-21	73 -21
0752015-21	73A-24
0752015-22	73 -22
0752015-22	73A-25
0752015-23	73 -29
0752015-23	73A-32
0752015-31	73 -18
0752015-31	73A-21
0752015-39	73 -20
0752015-39	73A-23
0752016-10	73 -34
0752016-10	73A-38
0752016-11	73 -34
0752016-11	73A-38
0752016-12	73 -34
0752016-13	73 -34

PART NUMBER	FIGURE AND INDEX NO.
0752016-14	73A-37
0752016-6	73 -34
0752016-7	73 -34
0752016-7	73A-38
0752018-10	73 -41
0752018-10	73A-36
0752018-13	73 -41A
0752018-18	73 -33A
0752018-200	73 -33
0752018-22	73 -41A
0752018-23	73 -33A
0752018-25	73A-44
0752018-27	73A-43
0752018-8	73 -33
0752018-8	73A-35
0752018-9	73 -33
0752019-10	73 -14
0752019-10	73A-17
0752019-11	73 -14
0752019-11	73A-17
0752020-1	73 -43
0752020-1	73A-51
0752020-3	73 -43
0752020-3	73A-51
0752021-1	73 -34
0752021-1	73A-38
0752022-1	73 -23
0752022-1	73A-26
0752023-1	73 -35
0752023-1	73 -39
0752023-1	73A-39
0752023-1	73A-41
0752023-3	73 -36
0752023-3	73 -40
0752023-4	73 -40
0752023-4	73A-42
0752023-5	73 -36
0752023-5	73A-40
0752024-11	71 - 1
0752024-11	72A-
0752024-12	71 - 1
0752024-12	72A-
0752024-15	71 - 1
0752024-15	72A-
0752024-5	71 - 1
0752024-5	72 -
0752025-1	73 -46
0752025-7	73 -46
0752025-7	73A-56
0752030-15	73 -42
0752030-18	73A-48
0752030-20	73A-48
0752030-8	73 -13
0752030-8	73A-17
0752030-9	73 -13
0752030-9	73A-17
0752031-15	73 -26
0752031-16	73 -26
0752031-16	73A-29
0752031-17	73 -27
0752031-17	73A-30
0752031-18	73 -27
0752031-18	73A-30
0752031-19	73 - 2
0752031-19	73A- 2
0752031-20	73 - 2
0752031-20	73A- 2
0752031-200	73 -12
0752031-201	73 - 1
0752031-202	73 -42
0752031-203	73 -16
0752031-204	73 -16
0752031-205	73 - 1
0752031-206	73 -12

PART NUMBER	FIGURE AND INDEX NO.
0752031-206	73A-16
0752031-207	73 -42
0752031-208	73 - 1
0752031-208	73A- 1
0752031-209	73 -16
0752031-210	73 -16
0752031-211	73 -16
0752031-212	73 -16
0752031-213	73A-19
0752031-214	73A-19
0752031-22	73 - 6
0752031-22	73A-15
0752031-24	73 - 3
0752031-26	73 - 4
0752031-26	73A- 7
0752031-29	73 -12
0752031-30	73 -42
0752031-36	73 -28
0752031-36	73A-31
0752031-37	73 -16
0752031-49	73A- 5
0752031-50	73 - 3
0752031-50	73A- 4
0752031-51	73 -11A
0752031-51	73A-13
0752031-52	73A-14
0752031-56	73 -26
0752031-56	73A-29
0752031-7	73 -24
0752031-7	73A-27
0752031-8	73 -25
0752031-8	73A-28
0752031-9	73 -28
0752031-9	73A-31
0752032-1	73 -15
0752032-1	73 -15
0752032-1	73A-18
0752033-1	28 - 5
0752033-1	29 -37
0752033-2	28 - 5
0752033-2	29 -37
0752035-1	73 -41D
0752035-1	73A-47
0752036-2	87A- 6
0752036-2	129 -35
0752036-3	87A- 7
0752036-3	129 -36
0752036-4	87A- 8
0752036-4	129 -37
0752036-6	87A-11
0752036-6	129 -40
0752037-1	76 -53
0752037-1	77 -55
0752037-1	113 - 7
0752038-1	77 -57
0752041-1	71 -20
0752041-3	71 -20
0752042-1	71 -23
0752042-5	71 -23
0752043-1	71 -16
0752044-1	71 -21
0752044-3	71 -21
0752047-1	73 -36
0752047-1	73A-40
0752609-2	73 -55
0752609-2	73 -62
0752609-27	73 -55
0752609-27	73 -62
0752609-27	73A-64
0752609-27	73A-71
0752610-1	125A- 9
0752611-1	125A-11
0752620-1	71 -26
0752626-1	73 - 8

PART NUMBER	FIGURE AND INDEX NO.
0752626-1	73A- 9
0752627-1	73 -11A
0752627-1	73A-12
0752628-1	73 -46
0752628-1	73A-55
0752644-1	125C- 1
0752644-2	125C- 2
0752644-5	125C- 8
0752644-6	125C- 9
0752646-1	125C- 6
0753000-13	33 - 2
0753000-13	33 -18
0753000-14	33 - 3
0753000-15	33 - 3
0753000-23	33 - 4
0753000-24	33 - 4
0753000-26	33 -19
0753000-27	33 -19
0753000-28	33 -14
0753000-29	33 -14
0753002-9	33 - 1
0753003-1	34 -15
0753003-1	34A-10
0753008-1	33 - 8
0753008-1	33 -48
0753009-1	28 - 2
0753009-1	29 - 6
0753009-2	28 - 3
0753009-2	29 - 7
0753010-1	89 - 2
0753011-1	89 - 1
0753011-3	89 - 1
0753012-1	33 -12
0753012-7	33 -13
0753013-1	33 -16
0753017-1	33 -11
0753017-2	33 -12
0753018-201	33 -12
0753018-202	33 -12
0753018-3	33 -13
0753018-4	33 -20
0753018-5	33 -21
0753018-6	33 -22
0753020-1	33 -49
0753020-2	33 -48
0753021-1	33 -17
0753023-200	33 -12
0753023-201	33 -12
0753023-202	33 -12
0753023-3	33 -13
0753023-4	33 -13
0753026-1	33 -46
0755002-2	77A- 5
0756001-13	67 - 3
0756001-13	68 - 4
0756001-13	104 -42
0756001-13	105 -40
0756001-3	109 -10
0756001-3	110 -19
0756001-4	68 - 3
0756001-8	109 -24
0756001-8	110 -32
0756002	109 -18
0756002	110 -25
0756003-1	74 -52
0756003-1	76 -54
0756005-1	110A-
0756005-2	110A-17
0756005-3	108 - 2
0756005-3	110A-
0756008-1	110A- 2
0756009-1	110A- 8
0756009-5	110A- 9
0756009-7	110A- 8

PART NUMBER	FIGURE AND INDEX NO.
0756010-1	110A-12
0756011-1	110A- 7
0756012-1	110A-15
0756014-1	110A-10
0756014-2	110A-14
0756015-1	110A- 4
0756019-1	113A-25
0756022-1	113A-32
0756022-2	113A-31
0756023-1	113A-33
0756024-1	113A-22
0760005-1	96 - 4
0760006-1 *	55 -17A
0760012-3	92 -18A
0760012-4	92 -19A
0760012-6	92 -19A
0760012-7	92 -18A
0760016-1	94B- 2
0760017-3	94B- 6
0760018-1	94B- 4
0760019-5	94B- 1
0760019-7	94B- 1
0760023-1	94B-26
0760111-2	14 -19
0760618-1	5 -43
0760618-1	6 -43
0760618-1	6A-35
0760618-2	5 -43
0760618-2	6 -43
0760618-2	6A-36
0760679-2	19 -43
0761000-4	94A-43
0761000-4	94A-43
0761202	96 -26
0761202-2	96 -31
0761202-3	117 -16
0761202-50	96 -30
0761205	100 - 5
0761205-2	100 - 6
0761205-3	100 - 8
0761205-3	100A- 5
0761205-3	131 - 3
0761205-3	132 - 3
0761205-8	100A-
0761205-9	100A- 3
0761210-1	100 - 7
0761210-1	100A- 4
0761210-1	131 - 2
0761210-1	132 - 2
0761210-4	100 -18
0770011-19	134 -20
0770011-24	134 - 8
0770011-29	134 -59
0770011-30	134 -55
0770011-33	134 -98
0770011-37	134 -27
0770012-13	134 -26
0770012-13	134 -32
0770012-13	134 -48
0770012-13	135 -34
0770012-13	135 -40
0770012-13	135 -54
0770012-15	134 -99
0770012-17	135 -41
0770012-39	135 -36
0770012-43	135 -46
0770012-45	134 -64
0770012-45	134 -90
0770012-45	135 -55
0770012-5	135 - 1
0770012-6	135 -18
0770012-7	134 - 1
0770012-8	135 -20
0770012-9	135 -35

PART NUMBER	FIGURE AND INDEX NO.
0770028-3	134 -99C
0770028-4	134 -99D
0770028-5	134 -95
0770028-6	134 -96
0770038-2	121 -32
0770038-2	121 -42
0770038-2	122 -32
0770038-2	122 -41
0770056-1	67 -88
0770056-1	68 -92
0770057-1	67 -91
0770057-1	68 -95
0770102-1	68D-10
0770104-1	68D-10
0770104-1	68E-17
0770104-2	68D-10
0770104-2	68E-17
0770104-3	68E-17
0770104-4	68E-17
0770657-1	121 -10
0770657-1	122 -11
0770712-1	35A-14
0770719-1	68D- 2
0770719-2	68E- 2
0770728-1	121 -10A
0770728-1	122 -11A
0770762-1	18 -22
0791100-11	32 -13
0791100-12	32 -13
0791100-3	25 -17
0791101-12	24 -54
0791101-12	26 - 1
0791101-15	26 -
0791101-16	26 -
0791101-17	24 -54
0791101-17	26 - 1
0791101-18	26 -
0791101-19	26 -
0791101-7	26 -
0791102-10	24 -
0791102-11	25 -
0791102-12	24 -
0791102-13	24 -
0791102-14	24 -
0791102-15	24 -
0791102-16	24 -
0791102-17	24 -
0791102-18	32A-14
0791102-19	32A-14
0791102-2	25 -27
0791102-20	24 -
0791102-21	24 -
0791102-22	24 -
0791102-23	24 -
0791102-3	25 -30
0791102-3	26 - 2
0791102-4	25 -25
0791102-4	32 -
0791102-5	32 -
0791102-5	32A-
0791102-6	25 -34
0791102-8	23 - 1
0791102-9	24 -24
0791200-10	35A-
0791200-11	35A-
0791200-7	35 - 1
0791200-7	35A-63
0791200-7	38 -
0791200-8	23 - 2
0791200-8	35 -
0791300-10	30 -22
0791300-5	29 -18
0791300-6	29 -22
0791300-9	30 -11

PART NUMBER	FIGURE AND INDEX NO.
0791302-3	29 -30
0791302-4	29 - 1
0791302-4	30 -
0791302-7	29 -
0791302-7	33 -
0791302-8	25 -48
0791302-8	29 -
0791303-1	28 -
0791303-2	28 -48
0791303-3	28 -
0791303-4	28 -
0791303-5	28 -
0791303-6	28 -
0791303-7	28 -
0791303-8	28 -
0791309-10	28 -
0791309-9	28 -
0792000-22	4 -
0792000-23	4 -
0792000-24	4 -
0792000-25	4 -
0792000-8	7 -
0792000-9	7 -
0800023-3	59 -37
0800023-3	59A-40
0800023-3	62 -15
0800023-5	59 -36
0800023-5	59A-39
0800023-5	62 -13
0800030-14	119 -27
0800030-19	119 -34
0800030-2	119 -24
0800030-4	119 -33
0800030-5	119 -30
0800045-15	120 - 8
0800045-23	120 -16
0800045-24	120 - 7
0800045-6	120 - 9
0800111-2	70 -17
0811490-6	90 -20
08118	47 - 8
08118	48B- 8
08118 #	48 - 7
08118 #	48A- 7
0812362-1	119 - 9
0812363-1	119 -15
0812366-1	119 -31
0812369-1	119 -32
0813150-54	90 -20
0813150-55	90 -20
0813156-4	90 -21
0813503-8	129 -11
0813503-8	129 -22
0813526-6	52 -17
0813569-1	68A-15
0813569-1	68B-16
0813569-2	67 -68
0813569-2	68 -68
0813601-4	76 -24
0813601-6	76 -24
0813601-9	68 -21
0813610-3	88 - 3
0813610-6	88 - 3
0813619-2	136 - 5
08231	47 - 2
08231	48B- 2
08231 #	48 - 1
08231 #	48A- 1
0850375-1	104 -30D
0850375-1	105 -28D
0851559-1	76 - 6
0851583-2	109 -22
0851583-2	110 -30
0851583-3	109 -20

PART NUMBER	FIGURE AND INDEX NO.
0851583-3	110 -28
0851592-1	109 -23
0851592-1	110 -31
0851700-96	84 -53
0851700-96	85 -40
1A0218	113 -33
1A0218	115 -10
1A0233	113 -34
1A0233	115 -11
1A0235	113 -33
1A0235	115 -10
1A1001	61 -53
1A1001	63 -75
1K1-6-10	117E-33
1K66-1	117E-35
1N1344A	121 -56
1N1344A	122 -54
10-24X1/2	42 -17
10-24X1/2	42C-16
10-8001C	120C-18
10-8001C	120C-19
10004-101	70 -23
10004-98	70 - 4
1007	1 - 4
102PDLN4	67 -57
102PDLN4	68 -56
1024A-8	1 - 3
1066-2	80 -37
1071-1	102 -47
109450	114 -29
109531	114 -30
109532	114 -30
1101-1	80 - 1
1101-3	80 - 2
1101-4	80 -11
1103-1	80 -35
1104-2	80 -43
1104-4	80 -51
1104-7	80 -42
1106-1	80 -40
110691	1 -47
110691	68A-47
110691	68B-48
110691	68C-53
1107-1	80 -36
1110-1	80 -46
1110-4	80 -25
1110-9	80 -34
1111-517700	107 - 7
1114-2	80 -52
1114-4	80 -48
1114-6	80 - 3
1114-7	80 -49
1115-1	80 -50
1117-3	80 -31
1127-2	80 -30
1127-4	80 -39
1131-2	80 -33
1132-1	80 -19
1132-3	80 -12
1132-5	80 -20
1133-3	80 - 8
1133-4	80 -28
1140-2	80 -27
1140-3	80 -15
1140-5	80 -17
1140-7	80 -13
1140-9	80 -14
1151-1	80 - 9
1165-2	80 -22
1165-3	80 -32
1171-2	80 - 7
1171-9	80 -10
1173-1	80 -18

PART NUMBER	FIGURE AND INDEX NO.
12-4862	120C-22
12RB	94B-25
12SE1-3	74 -99B
1200018-1	88A-23A
1200018-2	88A-23A
1200052-1	120 -18
1200054-2	120 -10
1200055-1	120 -20
1200057-1	119 - 2
1200057-1	120 - 2
1200058-1	119 - 1
1200058-1	120 - 1
1200059-1	120 -25
1200065-3	13 - 2
1200065-4	13 - 2
1200077-10	134 -65
1200077-10	135 -56
1200077-12	135 -64
1200077-13	134 -97
1200077-15	135 -47
1200077-16	134 -15
1200077-17	134 - 6
1200077-18	134 -13
1200077-2	134 -17
1200077-22	134 -12
1200077-23	134 -14
1200077-25	135 -59
1200077-26	135 -60
1200077-27	134 -28
1200077-28	134 -29
1200077-3	134 -86
1200077-3	135 -80
1200077-31	134 -30
1200077-34	134 -31
1200077-37	134 -91
1200077-39	135 -31
1200077-4	134 -86
1200077-4	135 -80
1200077-5	134 -74
1200077-5	135 -67
1200077-7	134 -85
1200077-7	135 -81
1200077-8	134 -87
1200077-8	135 -58
1200077-8	135 -82
1200077-9	134 -74
1200077-9	135 -78
1200078-10	135 -52
1200078-11	135 -43
1200078-12	135 -42
1200078-15	135 -53
1200078-2	135 -29
1200078-7	135 -25
1200079-10	134 -37
1200079-2	134 -35
1200079-3	134 -36
1200079-4	134 -49
1200079-6	134 -49
1200079-8	134 -47
1200079-9	134 -46
1200084-6	58 -29
1200084-7	58 -30
1200092-1	62 -51
1200103-3	64 -22
1200103-4	64 -22
1200103-5	64 -23
1200106-108	76 -21
1200106-108	77 -11
1200106-51	13 -14
1200106-52	13 -14
1200108-1	59 -39
1200108-1	59A-42
1200108-1	62 -14
1200116-1	70 -14

PART NUMBER	FIGURE AND INDEX NO.
1200116-2	70 -14
1200130-1	123 -19
1200134-1	59 -38
1200134-1	59A-41
1200134-1	62 -15
1200136-1	62 -26
1200136-1	63 -34
1200136-1	63B-30
1200136-1	63C-51
1200137-1	62 -54
1200138-1	62 -44
1200138-1	63 -47
1200138-1	63C-65
1200138-2	63C-33
1200139-1	62 -41
1200139-1	63 -43
1200139-1	63C-37
1200141-1	62 -39
1200141-1	63 -36
1200141-2	62 -39
1200141-2	63 -36
1200142-1	62 -24
1200142-2	62 -24
1200143-1	62 -52
1200143-2	62 -52
1200146-1	62 -35
1200147-1	62 -28
1200147-2	62 -29
1200152-1	62 -30
1200154-1	62 -45
1200156-1	62 -47
1200156-1	63 -49
1200157-1	62 -37
1200158-1	62 -61
1200158-5	62 -61
1200159-1	62 -49
1200159-1	63 -51
1200159-3	63C-60
1200161-1	62 -17
1200162-21	62 - 1
1200162-22	62 - 1
1200162-23	62 -16
1200162-24	62 -16
1200162-25	62 - 3
1200162-26	62 - 3
1200162-27	62 -20
1200162-28	62 - 9
1200163-1	62 -23
1200163-2	62 -23
1200164-1	62 -19
1200164-1	63 -58
1200186-1	62 -43
1200186-1	63 -46
1200191-200	86 -10
1200191-201	86 -11
1200415-5	120A-21
1200415-5	120B-27
1200415-7 *	120A-17
1200415-7 *	120A-34
1200415-7 *	120B- 8
1200415-7 *	120C- 8
1200429-12	120B-70
1200429-12	120C-72
1200429-13	120B-69
1200429-13	120C-71
1200429-15	120B-68
1200429-15	120C-70
1200478-2	63A-26
1200503-1	61 -46
1200503-1	61A-46
1200504-1	61 -38
1200504-1	61A-37
1200504-3	61 -44
1200504-3	61A-44

PART NUMBER	FIGURE AND INDEX NO.
1200505-1	61 -40
1200505-1	61A-39
1200605-11 #	61 -17
1200605-11 #	61A-17
1200605-11 #	63 -16
1200605-12 #	61 -12
1200605-12 #	61A-12
1200605-12 #	63 -10
1200605-221 #	61 -16
1200605-222 #	61 - 1
1200605-223 #	61A- 1
1200605-224 #	61A-16
1200605-33	61 -13
1200605-33	61A-13
1200605-33	63 -11
1200605-34 #	61 -
1200605-35 #	61A-
1200605-40 #	61A-
1200637-5	8A-10
1200637-5	88A-51
1200661-2	2 -29
1200678-2	2 -41
1200678-2	2A-26
1200678-2	101 -38
1200678-2	102 -34
1200691-1	88A-49
1200713-1	2 -37
1200713-1	2A-24
1201039-1	70 - 5A
1205001-157	2C-32
1205001-158	2C-32
1205001-159	2C-32
1205001-160	2B-45
1205001-161	2B-45
1205001-200	2A- 1
1205001-200	2C- 4
1205001-201	2A- 1
1205001-201	2C- 4
1205001-56	2 - 4
1205001-59	2 - 4
1205001-59	2B- 4
1205001-60	2B- 4
1205001-61	2C- 4
1205001-62	2C- 4
1205010-1	2 -48
1205010-1	2A-20B
1205010-2	2 -49
1205010-2	2A-20C
1205010-3	2B-11
1205010-3	2C- 8
1205010-4	2B-12
1205010-4	2C- 9
1205013-14	2C- 6
1205013-15	2B- 6
1205013-4	2A-31
1205013-6	2 -51
1205015-1	2B-14
1205015-1	2C-11
1205015-1	57 -22
1205024-1	2B-15
1205024-1	2C-12
1205024-1	125A-13
1205024-1	125B-11
1205030-16	2C- 2
1205030-17	2B- 3
1205030-7	2B- 2
1205030-7	2C- 1
1205043-1	2B-33
1205043-1	2C-36
1205043-1	86 - 5
1205047-1	2B-48
1205085-1	2B-34
1205085-1	2C-40
1205088-1	2B-43

PART NUMBER	FIGURE AND INDEX NO.
1205088-15	2C-31
1205088-16	2B-44
1208	42 -12
1208	42 -15
1208	42C-11
1208	42C-14
1210	42 -18
1210	42C-17
1210020-200	24 -
1210020-200	25 - 1
1210020-4	24 - 1
1210020-8	24 - 1
1210029-2	32 - 4
1210029-2	32A- 4
1210029-5	32A- 4
1210030-1	24 - 9
1210030-2	24 -10
1210032-8	24 -83A
1210032-9	24 -83A
1210054-1	54 - 2
1211203-1	70 -24
1211250-1	49 -40
1211250-2	50 -36
1211250-7	49 -40
1211250-7	50 -36
1211251-1	49 -40
1211251-1	50 -36
1211252-1	52 -15
1211836-1	49 -39
1211836-1	50 -35
1212011-1	38 -21
1212012-1	38 -21
1213004-2	68C-18
1213035-4	67 - 8
1213035-4	68 -10
1213037-2	87 -33
1213043-1	88 - 6
1213127-1	30 - 1
1213158-1	113 -42
1213228-3	68 -29
1213228-3	74 - 7
1213229-2	68 -32
1213229-2	74 - 8
1213379-4	68C-18A
1213379-4	68C-22A
1213505-8	68A-42
1213535-1	2 -45
1213535-1	2A-28
1213535-1	37 - 8A
1213535-1	125A-13
1213645-1	68C-13
1215034-200 #	61 -14
1215034-200 #	63 -12
1215056-2	70 -29
121553	73 -63
121553	73A-72
121553	77B-21
1216012-1	107 -29
1217005-2	51A- 1
1220-1-0	95A-11
1220002-201	5 -
1220002-202	5 -
1220002-207	8 -16
1220002-209	5 -
1220002-21	12 - 2
1220002-210	5 -
1220002-211	5 -
1220002-212	5 -
1220002-213	5 -
1220002-215	8 - 9
1220002-22	12 - 8
1220002-25	12 -14
1220002-26	12 -15
1220002-27	12 -12

PART NUMBER	FIGURE AND INDEX NO.
1220002-36	8 -
1220002-37	8 -
1220002-38	8 -11
1220002-40	8 -13
1220002-41	8 -12
1220002-46	12 - 1
1220002-48	12 - 6
1220002-49	12 - 6
1220002-50	8 -16
1220002-51	8 -16
1220002-52	8 -17
1220002-53	8 -17
1220002-77	8 -17
1220002-79	8 -17
1220002-80	12 -15
1220002-84	8 -11
1220002-85	12 - 7
1220002-90	5 -
1220002-91	5 -
1220002-92	12A-12
1220003-15	12 - 1
1220003-16	12 - 7A
1220003-18	8 -16
1220003-201	6 -
1220003-209	8 -16
1220003-211	6 -
1220003-213	6 -
1220003-215	6 -
1220003-27	8 -17
1220003-28	8 -17
1220003-30	12 - 7A
1220003-35	6 -
1220003-80	11 -11
1220004-15	12 - 1
1220004-17	8 -17
1220004-18	8 -16
1220004-202	6 -
1220004-208	6 -
1220004-210	6 -
1220004-27	12 - 7A
1220004-32	6 -
1220006-21	12 -18
1220006-21	12A-15
1220006-22	12 -18
1220006-22	12A-15
1220007-20	12 -20
1220007-30	12A-20
1220007-37	12 -20
1220007-62	12A-18
1220007-63	12A-18
1220019-1	6 -14
1220019-10	6 -13
1220019-13	6 -40
1220019-13	6A-40
1220019-17	6A-41
1220019-18	6 -13
1220019-18	6A- 7
1220019-19	6 -14
1220019-19	6A- 9
1220019-2	6 -14
1220019-20	6 -14
1220019-20	6A- 9
1220019-21	6A-11
1220019-22	6A-11
1220019-3	6 -15
1220019-35	6A-40
1220019-4	6 -15
1220019-6	6 -40
1220019-9	6 -13
1220022-3	13 -45
1220094-2	3 -49
1220094-2	3A-17
1220095-3	12 - 7C
1220095-3	12A-24

PART NUMBER	FIGURE AND INDEX NO.
1221010-13	4 -25
1221010-13	5 -29
1221010-13	6 -29
1221010-14	4 -25
1221010-14	5 -29
1221010-14	6 -29
1221010-15	6A-26
1221010-7	4 -25
1221010-7	5 -29
1221010-7	6 -29
1221024-1	10 - 4
1221024-1	10A- 4
1221101-1	4 - 7
1221101-1	5 -10
1221101-1	6 -10
1221101-2	4 - 7
1221101-2	5 -10
1221101-2	6 -10
1221101-3	6A- 4
1221101-4	6A- 4
1221201-3	3 -37
1221201-3	3A-28
1221201-4	3 -37
1221201-4	3A-28
1222012-1	3A-20
1222013-3	12A-17
1222013-3	12A-19
1222013-6	12A-17
1222013-6	12A-19
1222021-1	12A-25
1222021-1	12 -25
1222021-1	11 -14A
1222022-1	3 -11A
1222022-1	3A-22
1226-3	80 -24
1226-4	80 -29
1230-1	80 -23
1231-1	80 -21
1232-4	80 -47
1232000-5	19 -22
1232000-6	19 - 4
1232000-7	19 -45
1232000-8	19 -
1232104	19 -19
1232105	19 -20
1232106	19 -21
1232114-1	19 -24
1232116	19 - 6
1232117	19 - 7
1232118-1	19 -38
1232118-1	19 -38
1232118-2	19 -38
1232118-2	19 -38
1234029-1	21 -30
1241063-2	40 -38
1241063-2	40A-43
1241063-2	41 -47
1241156-10	42A- 1
1241157-1	42A-15
1250106-1	84 -29
1250134-1	84 -58
1250207-1	121 -43
1250207-1	122 -42
1250208-1	121 -43
1250208-1	122 -42
1250211-4	121 - 5A
1250211-4	122 - 6A
1250213-15	123B-15
1250214-1	123B- 5
1250215-1	123B- 8
1250319-1	117E-36
1250401-3	87 -28
1250405-1	113A-35
1250407-1	113A-18

PART NUMBER	FIGURE AND INDEX NO.
1250408-1	113A-19
1250409-1	113A-20
1250410-3	2 -42
1250410-3	2A-25
1250410-3	2B-21
1250410-3	2C-21
1250410-3	113A-16
1250412-1	71 -25
1250921-2	113A-33
1250922-2	113A-22
1253031-3	89 -19
1253032-1	89 - 3
1253032-4	89 - 3
1253033-2	89 - 5
1253034-1	89 - 4
1253037-1	89 - 6
1253040-1	89 - 5
1253041-1	89 - 8
1260016-1	96 -41
1260021-1	92 -35
1260043-2	116 -32
1260043-2	117 -30
1260043-2	117A-29
1260458-6	68B-54
1260458-6	92 -40
1260458-7	68B-54
1260458-7	68C-58
1260458-7	92 -40
1260460-4	92 -19B
1260474-1	35A-69
1270015-1	121 -24
1270015-1	122 -29
1270432-2	123 -61
1270479-1	68A-47
1270479-1	68B-48
1270479-1	68C-53
1270682-1	94A-49A
1270682-1	94B- 9
1270683-1	94B-11
13-8760	45 - 8
13-8760	46B- 8
133A3	117A- 5
13830	43 - 6
13836	42 - 4
13836	42A- 7
13836	42C- 4
13889	42 - 7
13889	42A- 9
13889	42C- 6
13889	43 - 6
1400014-1	2 -31
1400014-1	2A-19
1411202-201	49 -30
1411202-201	50 -28
1414045-2	61 -16
1414045-2	63 -14
1414082-13	54 - 2
1414082-14	54 - 1
1414082-18	54 - 1
1414082-20	54 - 1
1414082-21	54 - 2
1414082-22	54 - 2
1414082-6	54 - 2
1414082-7	54 - 1
1414100-212	60 -32
1414100-212	61 -34
1414100-212	61A-33
1414100-212	63 -69
1414100-8	60 -16
1414100-8	61 -18
1414100-8	61A-18
1414100-8	63 -17
1414100-9	60 -11
1414100-9	61 -13

PART NUMBER	FIGURE AND INDEX NO.
1414100-9	63 -11
1414100-9	63A- 9
1414103-12	60 -22
1414103-2	60 -21
1414103-2	61 -23
1414103-2	61A-22
1414103-45	61 -24
1414103-45	61A-23
1414103-6	60 -23
1414103-6	61 -25
1414103-6	61A-24
1414104-1	60 -48
1414104-1	63 -77
1414104-39	60 -29
1414104-39	61 -31
1414104-39	61A-30
1414104-4	60 - 3
1414104-4	61 - 4
1414104-4	61A- 4
1414104-4	63 - 3
1414104-4	63A- 5
1414104-40	60 -30
1414104-40	61 -32
1414104-40	61A-31
1414104-41	60 -31
1414104-41	61 -33
1414104-41	61A-32
1414104-42	60 -31
1414104-42	61 -33
1414104-42	61A-32
1414104-45	60 -37
1414104-46	60 -39
1414104-54	63B-21
1414104-54	63C-91
1414104-56	60 -40
1414104-56	63 -60
1414104-56	63B-11
1414104-56	63C-79
1414104-8	60 -45
1414104-8	61 -43
1414104-8	61A-43
1414104-8	63 -64
1414104-8	63B-16
1414107-1	60 -50
1414107-1	61 -52
1414107-1	61A-52
1414107-1	63 -79
1414110-1 ¤	60 -12
1414110-1 ¤	63 -12
1414110-3 ¤	60 -14
1414110-3 ¤	63 -14
1414111-2	63 - 9A
1414111-5	63 - 9A
1414112-1	60 -28
1414112-1	61 -30
1414112-1	61A-29
1414116-1	60 -42
1414116-1	61 -42
1414116-1	61A-42
1414116-1	63 -61
1414116-1	63B-15
1414116-1	63C-86
1414217-2	60 -17
1414217-3	60 -18
1414217-3	61 -20
1414217-3	63 -22
1414217-3	63A-17
1414217-7	60 -17
1414217-7	61 -19
1414217-7	63 -23
1414217-7	63A-17
1414223-34	61 -50
1414223-34	61A-50
1414230-1	60 - 9A

PART NUMBER		FIGURE AND INDEX NO.
1414230-1		61 -11
1414230-1		61A-11
1414231-4		60 -49
1414231-4		61 -51
1414240-3		63B-
1414240-3	¤	63B-
1414240-4		63B-
1414240-4	¤	63B-
1414241-3		63B-36
1414241-4		63B-37
1414242-1		63B-29
1414243-1		63B-32
1414245-2		63B-10
1414247-1		63B-24
1414248-1		63B- 8
1414249-2		63B-23
1414252-1	#	60 -59
1414252-1	#	63 -89
1414252-1	#	64 -23
1414252-2		60 -60
1414252-2		61 -62
1414252-2		63 -90
1414252-2		64 -24
1414252-6	#	60 -62
1414252-6	#	63 -92
1414252-6	#	64 -26
1414252-7		60 -61
1414252-7		63 -91
1414252-7		64 -25
1414257-5		63A-25
1414258-1		63A-22
1414259-1		63A-24
1414261-1		63A-21
1414262-1		63A-13
1414264-13	¤	63A-10
1414264-5	¤	63A-12
1414265-11	#	63A-
1414265-12	#	63A-
1414265-212	#	63A- 2
1414265-213	#	63A-13
1414265-8		63A-16
1414266-1		63A-20
1414267-1		63A-28
1414268-1		63A-27
1414269-1		63A-21B
1441001-2		40 -10A
1441001-2		40A-10A
1441003-1		40 -16
1441003-1		41 -17
145-10		42 -38
145-10		42A-29
1450009-1		74 -82
1460320-1		91 - 1
1460320-1		91 -27
1460320-1		92 - 1
1460320-1		92 -24
1460501-21		91 - 2
1460501-21		91 -28
1460501-21		92 - 2
1460501-21		92 -25
1460501-36		92 -25
1460505-1		92 -28A
1470089-10		123A-20
1470089-14	¤	123A-21
1470089-6		123A-28
1470089-8		123A-30
1505014-1		2B-12A
1505014-1		2C- 9A
1505014-2		2B-12A
1505014-2		2C- 9A
1505015-16		2C- 7
1505015-17		2B- 7
1505015-30		2C- 7
1505015-31		2B- 7

PART NUMBER		FIGURE AND INDEX NO.
1510040-5		22 -24
1511205-13		49 -22
1511205-13		51A-
1511205-14		50 -22
1511205-14		51A-
1511205-16		49 -22
1511205-16		51A-
1511205-17		50 -22
1511205-17		51A-
1511205-6		50 -22
1511205-6		51A-
1511205-7		49 -22
1511205-7		51A-
1511206-11		51A-15
1511206-13		51A-16
1511206-14		51A-16
1511206-20		51A-12
1511206-4		51A-19
1511207-1		51A-17
1511208-12		51A-28
1511208-13		51A-28
1511208-16		51A-30
1511208-17		51A-31
1511208-3		51A-28
1511208-4		51A-28
1511209-1		51A-27
1511209-10		51A-20
1511209-11		51A-20
1511209-12		51A- 5
1511209-8		51A-11
1511212-1		51A-24
1511212-3		51A-24
1511212-5		51A-24
1511212-6		51A-24
1514059-1		63A-21A
1514223-28		61 -47
1514223-28		61A-47
1520006-1		3 -42
153-15		42A-14
154-13		42A-15
156-1		42 - 8
156-1		42C- 7
1560001-13		94A-46A
1560110-1		94A-50
1560110-3		94A-49A
1560218-1		74 -99B
1570043-1		68A-63
1570043-1		68B-64
1570043-1		68C-68
1570043-3		125A- 5
1570043-3		125B- 9
1570142-2		94A-51
1570149-200		94A-43
1570149-201		94A-46A
1570149-202		94A-46A
1570150-1		94A-51
16-2000C		120C-21
16-8375C		120C-19
16-8500C		120C-18
1600010-117		76 -63
1600010-12		13 - 68
1600010-47		76 -71
1600069-1		70A- 1
1600069-2		70A- 1
1605022-3		2B-39
1605029-1		2B-38
1605034-1		2B-40
161-25		42 - 3
161-25		42C- 3
161-30		42A- 2
161-4		42 - 3
162-10		42 - 2
162-10		42C- 2
162-27		42A- 3

PART NUMBER		FIGURE AND INDEX NO.
162-4		42 - 2
1620058-1		10 -21A
1620058-1		10A-23
1620075-3		3A-37
1631010-1		18 -33
1631010-2		18 -32
164-03600		42A- 8
164-15A		42A- 8
164-15K		42A- 8
164-7		42 - 5
164-7		42C- 5
1642000-18		45 - 8
1642000-18		46B- 8
1642000-4		45 - 8
1642000-4		46B- 8
1650010-1		76 -67
1650010-2		76 -68
1650012-1		78A-
1650014-2		78A-10
1650015-1		78A- 9
1650016-1		76 -84
1650017-1		76 -85
1650019-8		78A-12
1650020-1		78A-12
1650021-2		73 -38
1650031-1		74 -93
1650031-5		74 -92A
1650037-1		74 -66
1652012-6		73A-53
1652012-9		73A-52
1652013-25		73 -41C
1652013-25		73A-46
1652013-28		73 -41B
1652013-3		74 -97A
1652013-35		73A-45
1652013-5		74 -94A
1653008-1		33 -47
1656003-1		76 -79
1656003-5		76 -73
1656005-1		76 -80
1656006-1		76 -75
1660300-40		70A-20
1713039-1		95B-29
1713039-1		117C-13
1713039-1		117E-17
1713039-1	#	117B-49
1714000-200		63C-89
1714000-33		63C-87
1714035-1		61 -63
1714035-1		63 -91
1714035-1		64 -25
1714040-1	#	61 -61
1714040-1	#	63 -89
1714040-1	#	64 -23
1714040-2	#	61 -64
1714040-2	#	63 -92
1714040-2	#	64 -26
1714061-1		63C-84
1714067-2		63C-83
1714067-4		63C-83
1715023-3	¤	61 -16
1715023-3	¤	63 -14
1777		39 -11
1777		39 -11
180231		79 -36
180231		79A-29
180231		81C-33
1816TR		123A-25
182684		79 -37
182747		79A-32
182747		81C-34
183-1		42 -37
183-1		42A-26
183-1		42C-35

PART NUMBER	FIGURE AND INDEX NO.
184793	79 -13
1862	47 -35
1862	48A-29
1862	48B-30
1863	47 -23
1863	47 -34
1863	48 -20
1863	48A-20
1863	48A-28
1863	48B-21
1863	48B-29
186320	79 -39
186320	79A-34
186320	81C-36
1866-30	42 - 6
188141	79A-21
188141	81C-25
188302	79 -30
188302	79A-23
188302	81C-27
188434	79 -28
188434	79A-20
188434	81C-24
189482	79A-16
189482	81C-19
189574	79A-13
189574	81C-16
189739	79A-17
189739	81C-20
189744	79A- 3
189744	81C- 3
190094	79 -17
190576	79 -42
190733	79 -12
190734	79 - 6
19118	47 - 2
19118	48 - 1
19118	48A- 1
19118	48B- 2
191869	79 -31
191869	79A-24
191869	81C-28
192103	79 -18
1924	123A-26
192528	79 -34
192558	79 -41
192558	79A-36
192558	81C-38
192707	81C-31
192709	79A-27
193385	79 -19
193385	79A-12
193385	81C-15
196195	79A-11A
2-11	120B-65
2-11	120C-67
2-15	120B-64
2-15	120C-66
2DC-C6	32 -13
2DC-C6	32A-14
2N441	122 - 2
20H3P	121 -56
20H3P	122 -54
2013131-1	70 -30
2013142-1	102A- 4
2015009-3	70 -24
2015009-3	70 -24
20351-4	95B- 1
204864	79 - 9
204864	79A- 8
204864	81C- 8
206336	79 - 5
206336	79A- 5
206336	81C- 5

PART NUMBER	FIGURE AND INDEX NO.
206337	79 -25
206337	79A-18
206337	81C-21
209AC	103 -49
209AC	104 -46
209AC	105 -44
210031	79 -10
210031	79A- 9
210031	81C- 9
210036	79 - 8
210036	79A- 7
210036	81C- 7
210039	79 -27
210039	79A-19
210039	81C-23
210095	79 -11
210100	79 -32
210112	79 -16
210206	79 - 7
210207	79 -14
210214	79 -33
210216	79A-31
210216	81C-40
210253	79 - 1
210253	79A- 1
210253	81C- 1
210257	79 -40
210257	79A-35
210257	81C-37
210259	79 - 2
210261	79A-10
210261	81C-10
210269	79 -35
210272	79 -22
210289	79 -15
210293	79 -26
2103	117A-36
2103	117B- 5
210326	79A-26
210326	81C-30
210392	79A-11
210393	79A-11B
210394	79A-11B
210396	79A- 6
210396	81C- 6
210398	79A-28
210398	81C-32
210399	79A-15
210399	81C-18
213200	79A-30
213200	81C-39
213214	79A- 2
213214	81C- 2
213232	79A-25
213232	81C-29
214202	79A-11C
218036	79 - 3
2182D-R	68A-42
218446	79 -38
218446	79A-33
218446	81C-35
218537	79A-22
218537	81C-26
218547	79A- 4
218547	81C- 4
22A21-22-02	20 -33
22FH428	43 - 5
22FH632	93 - 4
22NA17A-054	127 - 8
22NA17A-054	127 -13
22NA17A-054	128 - 8
22NKM-02	31 - 8
22NKM-02	129 -53
2504-1	47 -22

PART NUMBER	FIGURE AND INDEX NO.
2504-1	48 -19
2504-1	48A-19
2504-1	48B-20
2598	47 -32
2598	48A-33
2598	48B-34
26R8-2	107 -52
26R8-2	108 -21
2600	48 -20
2600	48A-20
2600	48B-21
2602	47 -38
2602	48A-32
2602	48B-33
27-121	42 -16
27-121	42C-15
28S10-2	73 -68
28S10-2	73A-77
28S7-4	73 -68
28S7-4	73A-77
28S7-4	107 -52
2904-1	68B-35
2904-1	95B- 1
2904-1	95B-31
295055	13 - 6
295055	13 - 6
2981A4-27	67 -15
3A4F	68E- 4
3002	42 -23
3002	42C-22
3006	42C-29
3007	42C-25
3013	42 -33
3013	42C-32
3021	42A-11
3022	42A-10
3023	42A-12
30370-0100	68A-35
30370-0100	68B-36
30370-0100	117B- 2
30370-0100	117C- 2
30370-0102	68B-36
30370-0102	117C- 2
30475-0000	68A-36
30475-0000	117B- 4
312-12	107 -51
312-12	108 -21
3219	47 -15
3219	48 - 9
3219	48A- 9
3219	48B-14
3222	48 -10
3222	48A-10
3223	48A-37
3223	48B-38
3225	47 -29
3225	48 -23
3225	48A-23
3225	48B-27
3226	47 - 7
3226	48 - 5
3226	48A- 5
3227	47 -33
3227	48A-27
3227	48B-28
3228	48A-36
3228	48B-37
3233	48B-49
3236C2	47 -27
3236C2	48 -21
3236C2	48A-21
3236C2	48B-25
3244	48A-26
3244	48B-27

PART NUMBER	FIGURE AND INDEX NO.
3245-1	47 -23
3246	47 -39
3247	47 -40
3257	47 -17
3257	48 -13
3257	48A-13
3257	48B-16
3258	47 -20
3258	48 -11
3258	48A-11
3258	48B-18A
3258-1	47 -20
3258-1	48 -12
3258-1	48A-12
3258-1	48B-18A
33-199-1	109 - 5
33-199-1	110 -11
33-199-4	110 - 8
33-199-45B	109 - 7
33-199-45B	110 -13
33-199-5	109 - 3
33-199-5	110 - 9
33-199-6	109 - 4
33-199-6	110 -10
33-199-71	109 - 2
33-199-8	109 - 6
33-199-8	110 -12
33-199-901	109 - 1
33-199-902	110 - 7
330R	67 -80
330R	68 -80
34-828-1	81 - 1
34-828-1	81B- 1
34-828-10	81 -30
34-828-10	81B-30
34-828-11	81 -14
34-828-11	81B-14
34-828-12	81 -23
34-828-12	81B-23
34-828-13	81 -41
34-828-13	81B-41
34-828-14	81 -16
34-828-14	81B-16
34-828-15	81 - 7
34-828-15	81B- 7
34-828-19	81 - 9
34-828-19	81B- 9
34-828-2	81 - 2
34-828-2	81B- 2
34-828-20	81 -13
34-828-20	81B-13
34-828-24	81 -15
34-828-24	81B-15
34-828-25	81 -25
34-828-25	81B-25
34-828-26	81 -19
34-828-26	81B-19
34-828-27	81 - 5
34-828-27	81B- 5
34-828-28	81 -31
34-828-28	81B-31
34-828-31	81 -26
34-828-31	81B-26
34-828-34	81 - 6
34-828-34	81B- 6
34-828-7	81 -10
34-828-7	81B-10
34-828-8	81 -29
34-828-8	81B-29
34-828-9	81 -17
34-828-9	81B-17
34-828-902	81 -42
34-828-902	81B-42
34-828-903	81 -32

PART NUMBER	FIGURE AND INDEX NO.
34-828-903	81B-32
34-828-907	81 -39
34-828-907	81B-39
34-831-905	81 -11
34-831-905	81B-11
3407	47 -10
3407	48 - 8
3407	48A- 8
3407	48B-10
3408	47 -11
3408	48 -14
3408	48A-14
3408	48B-11
3408-1	47 -12
3408-1	48 -15
3408-1	48A-15
3408-1	48B-12
3408-2	47 -12
3408-2	47 -16
3408-2	48 -17
3408-2	48A-17
3408-2	48B-12
3410-3	48 - 6
3410-3	48A- 6
3410-5	47 -13
3410-5	48B-13
3411	47 - 9
3411	48 -16
3411	48A-16
3411-3	47 - 9
3411-3	48B- 9
3412	48 - 1
3412	48A- 1
3412-1	47 - 1
3412-1	48B- 1
3412-2	48B- 1
3413	48 - 2
3413	48A- 2
3413-1	48B- 3
3423-1	47 - 3
3423-3	47 - 3
3426	47 -45
3426	48B-43
3426	46A-44
3426	46B-51
3427	47 - 7A
3427	48B- 7A
3432	47 -19
3432	48B-17
3433	47 -18
3433	48B-18
3433-1	47 -20
3476	47 -47
3476	48B-45
3476	46A-49
3476	46B-18B
3477	47 -44
3477	48B-42
3477	46A-45
3477	46B-52
3478	47 -41
3478	49B-39
3478	46A-46
3478	46B-53
3478-1	48B-39
3478-1	46B-53
3479-1	48B-15
351-11-05-001	94B- 5
351-11-05-001	94B-12
35985	77B-20
36837	128 -53
3690	28-51
3690	2C-41
3690-1/2	1 -46

PART NUMBER	FIGURE AND INDEX NO.
3690-1/4	1 -46
3690-1/8	1 -46
37-206	42A-26
37206	42 -37
37206	42C-35
37570-0001	68B-37
37570-0001	117C- 4
38520A	42 -13
38520A	42C-12
3859A282-251A	94B-23
39014	76 -81
39091	42 - 9
39091	42C- 8
4NCC910P	21 -35
40-14	124A- 4
40S5-3	73 -31
40S5-3	73A-33
40S5-3	73A-34
40S5-4	73 - 7
40S5-4	73 -30
40S5-4	73 -32
40S5-4	73 -44
40S5-4	73 -44
40S5-4	73 -45A
40S5-4	73A- 8
40S5-4	73A-54
4002-244-16	28 - 4
4002-244-16	29 - 8
4002-244-16	73 - 3
4002-244-16	73A- 3
4002-244-16	129 -13
4002-3	73 -31
4002-4	73 - 7
4002-4	73 -30
4002-4	73 -32
4002-4	73 -44
4002-4	129 - 8
4002G	73 -31
4002G	73A-33
4002G	129 - 8
4002H	73 - 7
4002H	73 -30
4002H	73 -32
4002H	73 -44
4002H	73 -44
4002H	73 -45A
4002H	73A- 8
4002H	73A-34
4002H	73A-54
40760-0104	68C-38
40760-0104	117C- 2
40760-0104	117E- 2
4140-00-17	108 -24
4157-001	94B-24
4189	13 -40
4196	13 -39
4197	13 -40
4199	13 -40
43-1761	121 -56
43-1761	122 -54
4509	125C- 7
48143	38 -38
48155	11 -15
48172	15 -20
485-6D	107 -18
49165-22	134 -70
49265	67 -82
49265	68 -82
49265F938	54 - 4
49265F938	57 -18
49265F938	57 -25
49265F938	57 -25
49265F938	57A-17
49265F938	58 -11

PART NUMBER	FIGURE AND INDEX NO.
49265F938	58 -20
49265F938	58 -20
49265F938	66 -13
49265K2215	67 -65
49265K2215	68 -65
49330	22 -20
49330	22 -27
49330	23 -22
49330	27 - 8
49330	126 -73
49330	127 -26
49330	128 -24
49330	131 -59
49330	132 -59
5021-002	81C-11
51045	63 -74
511846-4	43 -17
5169	3 -50
5169	14 -32
5169	20 -48
5169	21 -36
52-048-250-0375	47 - 7
52-048-250-0375	48B- 7
534750	76A- 2
534750	77B- 2
537282	76 -17B
537282	76A- 6
537282	77 -47
537312	76 -17A
537312	77 -47
538076	76A-14
538076	77B-15
539547	76A-10
539547	77B-11
539911	76 - 7
550	1 -13
5579654	113A-12
561	42 -26
561	42 -30
561	42A-20
561	42A-22
561	42C-25
561	42C-29
576.1	1 - 5
579.6	1 - 6
59-022-044-375	64 -12
6DC-C6	32 -13
6DC-C6	32A-14
6F20-D	121 -56
6F20D	122 -54
600-015-8	40A-31
60232-1	68A-58
60232-1	68B-55
60232-1	68C-59
604-200-200	68B-35
604-200-200	68C-37
604-200-200	95B-31
61-18	42A-16
61-7	42 -22
61-7	42C-21
62-15	42A-17
625017	77B- 7
625219-2A13	76A-22
625219-2A6	76A-22
625303	76 -17A
625303	76A- 7
625303	77 -47
625303	77B- 8
625765	76A- 1
625765	77B- 1
625966	77A- 3
626062-3A5	76A-23
626189A	76 -17
626189A	76A- 5

PART NUMBER	FIGURE AND INDEX NO.
626189A	77 -46
626332	77A- 1
626341	77A- 2
626342	77A- 2
627335D12	76A-25
627335D13	76A-25
627377	121 - 5
627377	122 - 6
627392	77B- 6
627773	77 - 7
628472	76A- 1
628473	76A- 1
629076	76A- 3
629076	77B- 3
629176	76A-15
629176	77B-16
629422	76A- 3
630948	76A- 4
631237	77B- 1
631351A6	76A-24
631427A3	76A-24
633005	77B- 4
633006	77B- 4
633007	77B- 4
633027	77B-19
633311	76A- 4
633311	77B- 5
638154-1A6	76A-23
639151	77A- 3
639171	77A- 3
639410	74 -99A
639411	74 -99A
639596	76A-21
639717-2A1	76A-22
639761A1	76A-21
6436635	113A-10
6436637	113A-11
6436916	113A-13
6436989	113A-15
66-2	42 -30
66-3	42 -26
66-30	42A-20
66-30	42A-22
68-7	42 -27
68-7	42C-26
69-4	42A-23
7	120 -25
700	1 -11
721A7	103 -52
721A7	104 -49
721A7	105 -47
721A8	103 -54
721A8	104 -51
721A8	105 -49
723A	103 -50
723A	104 -47
723A	105 -45
73-10	42A-19
73-4	42 -25
73-4	42C-24
74-10	42A-21
74-2	42 -29
74-2	42C-28
75-15	42 -28
75-15	42A-28
79-022-094-0375	111 - 9
8-32X1/2	42 -11
8-32X1/2	42 -14
8-32X1/2	42C-10
8-32X1/2	42C-13
800-001-6	93 - 7
807	54 - 4
811542	68A-47
811542	68B-48

PART NUMBER	FIGURE AND INDEX NO.
811542	68C-53
8409	94A-51
8409	94B-17
90DA-2	72C-45
90DA-8	72C-45
91-8000AC	120C-20
95-5163	44 -48
95-5216	44 - 9
95-5216	44 -16
95-5217	44 -18
95-5242	44 - 7
95-5383	44 -35
9510155	44 -44
9510734	44 -43
9510816	44 - 8
9510871	44 -10
9510957	44 -51
9510965	44 -27
9510966	44 -26
9510977	44 -21
9510978	44 -20
9510983	44 -19
9510988	44 -32
9510993	44 -12
9511005	44 -31
9511103	44 -33
9511269	43 -12
9511271	43 -13
9511271	44 -41
9520061	44 -17
9520424	44 -25
9520448	43 -19
9520448	44 -39
9520644	44 -11
9520675	44 -33
9521184	43 - 8
9521246	44 -28
9524201	43 - 1
9524218	43 - 7
9524223	43 - 9
9524318	43 - 2
9524343	43 -14
9524463	43 -16
9530084	44 -42
9530373	44 -22
9530374	44 -22
9530593	44 -34
9532277	43 -14
9541458	43 - 8
97NT3-048	120C-21
98293-16-2.250	73 -64
98293-16-2.250	73A-73
99608	56 -15
99608K2215	58 -14
99833P.098	73A- 6
99836	73 -47A
99836	73A-57
99874	73 -47A
99874-1	73A-57